PLEASE READ
THE PRODUCT MANUAL
BEFORE USE

CYBERSKIN®

The GalaxyVoy Automatic Male Masturbator

Standard Version

User Manual

Thank you for using this product.
Please read this user manual carefully before use.

Product Description:

The GalaxyVoy Automatic Male Masturbator is a versatile adult toy designed to provide continuous pleasure and ignite the urge to embrace the next challenge. With massage and stimulation functions extending from the tip of the penis, it delivers an indescribable sensation, allowing you to experience orgasmic pleasure throughout its use.

Precautions:

① Noise Alert: The noise level during use is kept under 60 decibels (varies with different modes). It's recommended for use in a private setting.
② This product offers a variety of play and functional modes. We suggest trying out different modes to discover what suits your preferences best.
③ While using this product, it's crucial to use lubricant. Avoid direct use to prevent potential discomfort or harm.

Packing List

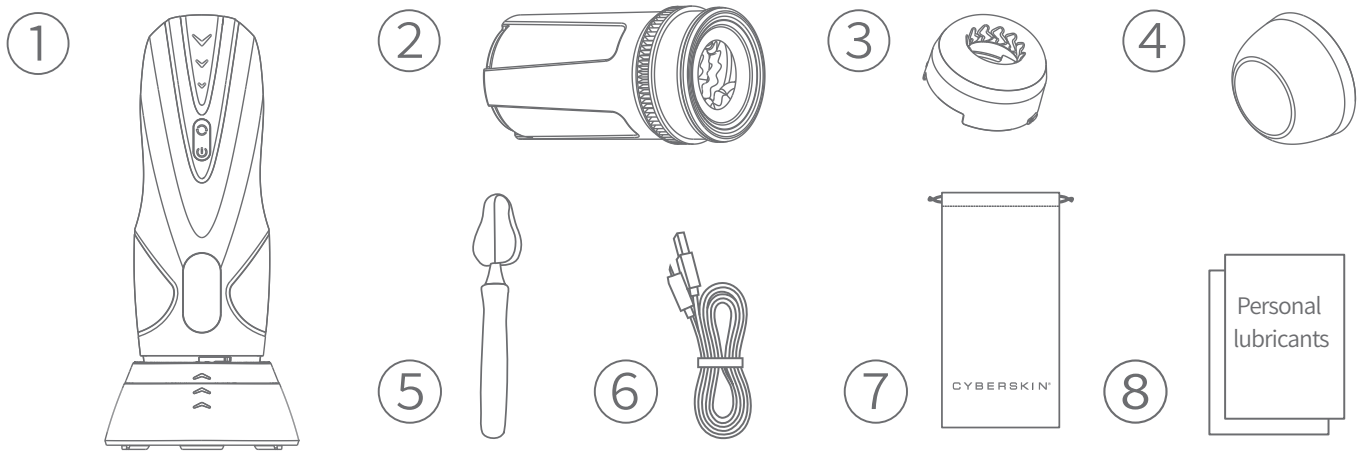

①Masturbation Cup
②Sleeve Cylinder
③Soft Silicone Circular Entrance
④Masturbation Cup Lid
⑤Sleeve Cleaning Sponge Stick
⑥USB Type-C Charging Cable
⑦Portable Travel Bag
⑧Four bags of water-based personal lubricants

※This product package does not include an adapter. Please use your own commonly used smartphone adapter for charging.

Disassembly And Installation Method Of Sleeve Cylinder

Disassembly Steps

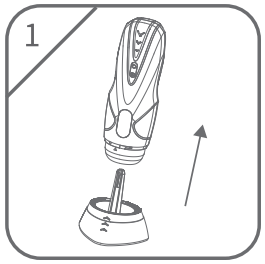

Remove the base

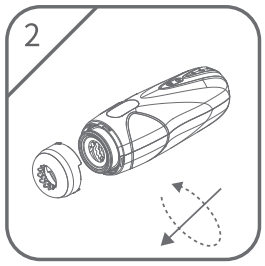

Hold the soft entrance part, rotate counter-clockwise, and remove it

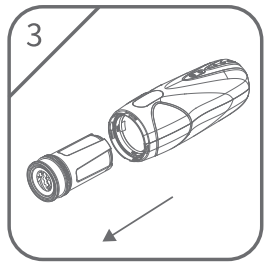

Pull the sleeve cylinder out from the cup body

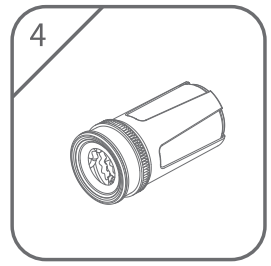

Disassembly complete

Installation Steps

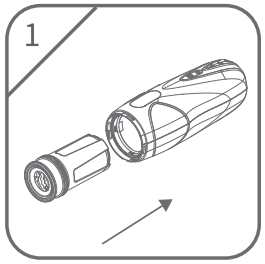

Insert the soft sleeve-cylinder into the cup body, push it inward, and secure it in place

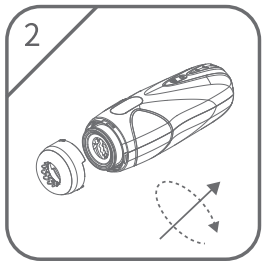

Pinch the soft circular entrance, align it with the markings on the cup body, and tighten clockwise

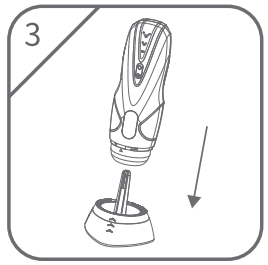

Insert into the base

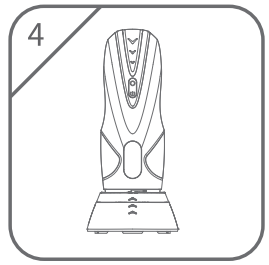

Installation completed

Charging Method

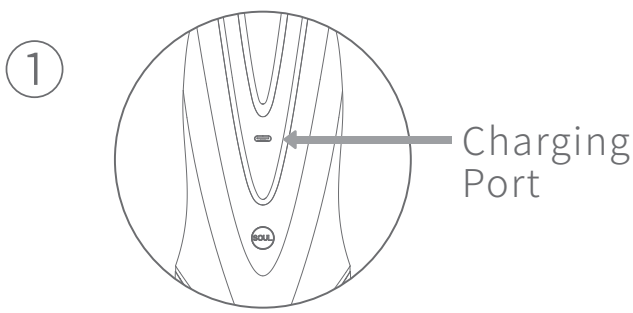

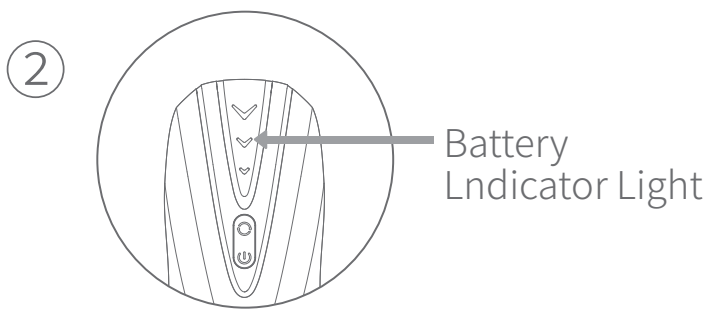

①【**Charging Instructions**】Please insert the USB Type-C charging cable into the charging port located at the top rear of the device.
②【**Battery Display Instructions**】When turning on the power, all three orange indicator lights will be fully lit without flashing; when the battery is low, the three orange indicator lights will flash for 10 seconds until the device shuts down automatically; during charging, the three orange indicator lights will light up sequentially from bottom to top, indicating the current battery level; when fully charged, the battery indicator will show full, and all three orange lights will remain on steadily.

Charging Reminder:
※ Please make sure to turn off the device before connecting the USB Type-C charging cable.
※ Keep your hands dry when plugging or unplugging the charging cable.
※ It is recommended to charge for 2-3 hours before the initial use.

User Guidance

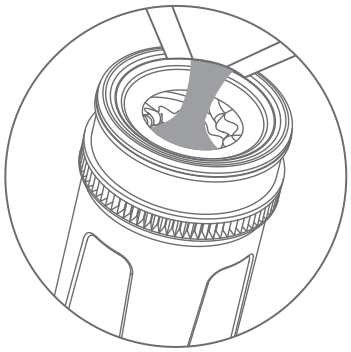

※ Attention:Before using the masturbator cup, please follow the illustration on the left to add an appropriate amount of lubricant to the soft entrance inside the masturbator cup, ensuring comfort during use. Also, apply a small amount of lubricant to the external soft entrance, but do not pour it directly to prevent lubricant from leaking into the machine and causing malfunctions. Not using lubricant can not only make use difficult but also may result in skin abrasions and damage to the product.
※ We recommend purchasing lubricant from reputable websites for future use.

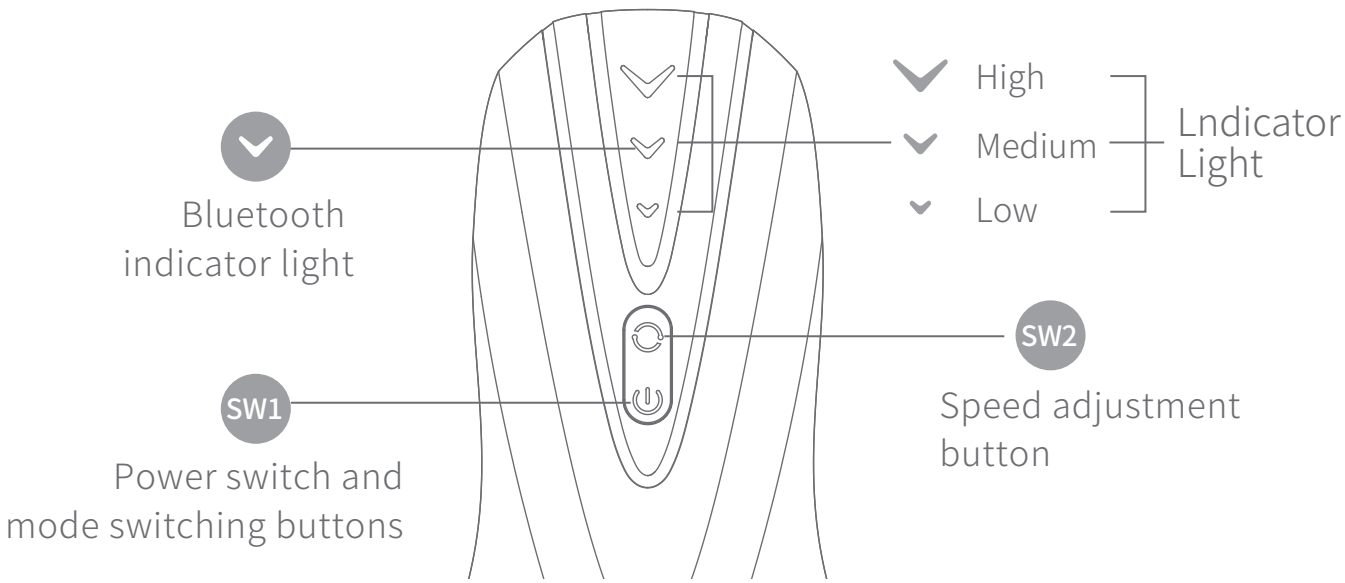

Button SW1

【Power Control】
※Press and hold the SW1 button for 2 seconds to toggle the power on and off;
※After powering on, all three orange indicator lights illuminate, indicating standby mode;
※With no operation, the masturbator cup will automatically shut down after 15 minutes in standby.

Notes on the operation function buttons

Button SW1

【Control Of Thrusting & Rotating Functions】

Under power-on conditions, when any mode is activated, the speed is set to medium, and the corresponding middle light is brightly illuminated.

a) Short press SW1 button for mode switching; there are a total of 8 thrusting & rotating modes. When switching modes, the three indicators will flash simultaneously, and the speed after switching will be the same as the speed before the mode change.

b) Double-clicking the SW1 switch is for the pause function; after a short press to resume, the thrusting and rotating mode automatically returns to the mode before the pause, with the speed being the same as before the pause.

c) After shutting down, the thrusting and rotating barrel automatically extends. The thrusting and rotating mode button allows you to cyclically select one of the 8 modes.

8 Descriptions Of Thrusting & Rotating Modes:

Affectionate Mode	High Tide Mode
Joyful Song Mode	Rolling Waves Mode
Flirting Mode	Abyss Mode
Intoxicated Mode	Wild Dance Mode

Button SW2

【Speed Control Button】

In the startup exercise mode, press the SW2 button briefly to enter the low, medium, and high three-stage adjustable speed states. The three speeds cycle incrementally. When changing each speed, the three orange indicator lights flash simultaneously once, and the corresponding indicator light is illuminated. The lights from top to bottom correspond to high, medium, and low speed levels.

Bluetooth Control

【Bluetooth indicator light】

a) After the device is powered on, Bluetooth is enabled by default, and the Bluetooth indicator light flashes rapidly;

b) When a Bluetooth connection is established, the Bluetooth indicator light remains steadily lit.

c) If the App is not connected within 5 minutes after turning on the device, the Bluetooth broadcasting will be turned off.In this case, to connect the App, you need to turn off the device, turn it on again, and restart the Bluetooth broadcasting status. When the device is turned off, the Bluetooth broadcasting will be turned off.

【One Button Climax Mode Explanation】

In any motion mode, you can press as needed or press freely. The one-button climax key allows you to immediately enter the highest-speed motion state, and once released, it quickly returns to the current mode, giving you the most urgent satisfaction and allowing you to enjoy the top-level thrill of accelerating at any time!

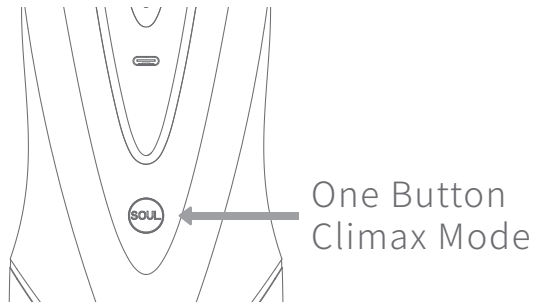

【Heating Dock】

After the base is plugged in and powered on, the intelligent constant temperature heating will automatically start. At the same time, the orange heating indicator light will light up in the form of a marquee, and the bottom atmosphere light will light up in the form of a breathing light. The heating will stop after 20 minutes. After the heating stops, the orange light will go out. The bottom ambient light is always on.

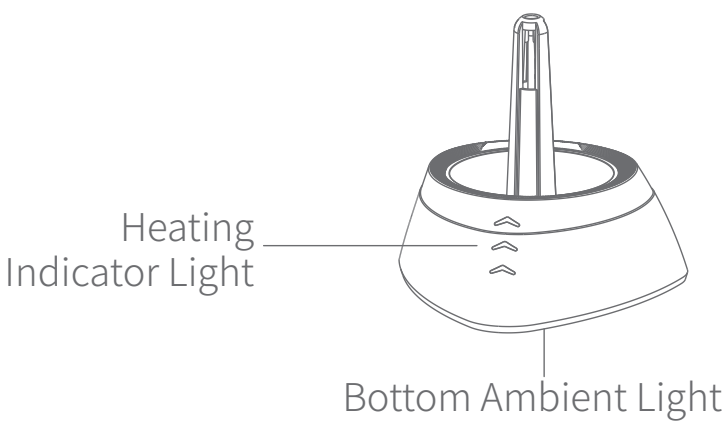

After drying is started, the heating indicator light lights up in the form of a marquee. After drying stops, the heating indicator light turns off.

【Soft Sleeve Heating Precautions For Masturbator Cup】

After using the heating base to warm or dry the soft sleeve of the masturbator cup, allow it to cool for 1-2 minutes before applying personal lubricant and using it. This helps prevent overheating, which may lead to burns or discomfort. Thank you for your attention to safety.

Cleaning And Maintenance

Electronic components of the product
The head (core electronic part) is splash-proof, while the heating base is not waterproof. Neither should be washed with water. It is recommended to clean them with a semi-dry towel. To ensure the product's lifespan, store it in a cool and dry place, avoiding exposure to high humidity or temperature.

※ If the main unit accidentally comes into contact with water, please turn it off immediately, invert it for over 8 hours to drain the water, and do not turn it on during this time. Your understanding and cooperation are appreciated.

Soft Sleeve Care

1) You can remove the sleeve cylinder from the masturbator cup and rinse the interior directly under the faucet.

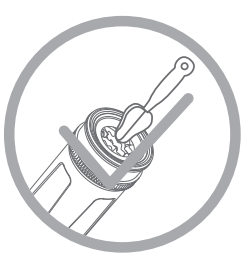

2) Soak the cleaning rod for the soft sleeve channel in warm water. After moistening, gently insert it into the soft sleeve channel and brush softly to remove lubricants and residues. Then, use a soft cloth to gently wipe the surface of the channel, removing excess water. Place the soft rubber channel flat in a cool, well-ventilated area to air dry or use the base for drying, ensuring it is completely dry.

3) The soft silicone entrance can be taken out from the cup and rinsed directly under the faucet.

4) Please refrain from using cleaning solutions or disinfectants containing alcohol or corrosive components to clean the soft sleeve. The soft sleeve can be cleaned using a skincare-oriented body wash, followed by rinsing with water at a temperature below 40 degrees Celsius or with plain water.

5) Avoid using a hairdryer or heat gun to blow-dry the soft sleeve to prevent irreversible damage to the product. After allowing the soft sleeve to thoroughly air-dry, you can apply a dedicated care powder to the surface of the soft sleeve to ensure the product remains dry and smooth.

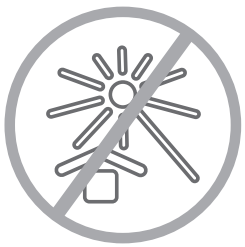

6) Please refrain from storing the product in direct sunlight and high-temperature environments (such as leaving it outdoors or in a vehicle exposed to high heat) to prevent material deterioration and deformation of the product.

Note: The sleeve is a consumable item, and it is recommended to replace it every sixty uses or every four months (lifespan may vary based on different usage methods). If you notice any tears or ruptures in the sleeve, please discontinue its use immediately to prevent liquid from entering the electronic components and causing irreversible damage.

Important Reminders

User Guidelines:

• This product is intended for use by adults aged 18 and over. To prevent the spread of infectious diseases, please keep it for personal use and do not share it with others.

• Do not use this product if you are feeling unwell.

• Individuals using medical electronic devices (such as pacemakers) and anyone who may experience discomfort should refrain from using this product.

Storage And Maintenance:

• When not in use for an extended period, kindly ensure to fully power off the product before storing. In rare instances, if the product remains unused or uncharged for six months or more, the built-in battery may naturally degrade. It is recommended to recharge the product at least every three months.

• Please avoid storing the product in direct sunlight or high-temperature environments (such as leaving it outdoors or in a sun-exposed vehicle) to prevent potential malfunctions, overheating, or fire hazards.

• Refrain from disassembling any components of the product, as doing so may lead to damage or compromise your safety.

• Kindly refrain from using any external devices, such as microwaves or hair dryers, to heat or dry your product.

• When placing the product in a handbag or briefcase, please use the provided storage bag to prevent unnecessary scratches or exposure to external bacteria.

Electronic Reset Of the Product:

• If you encounter program errors or malfunctions where certain functions cannot be used, please turn off the device. Charging the product will reset its electronic functions. Afterward, restart the product to restore normal operation.

Product Specifications

Product Name: The GalaxyVoy Automatic Male Masturbator
Product Model: The GalaxyVoy-BT
Product Dimension: 300x134x128.5mm **Product Material:** ABS, TPE, PC
Total Weight: 1048g **Rated Voltage:** 7.4V⎓ **Rated Power:** 10W
Built-in Power Supply: Rechargeable Lithium Battery Pack 7.4V 800mAh
Charging Time: Approx. 2-3 hours
Usage Time: Approximately 1 hour (depending on the usage mode)
Product Name: The GalaxyVoy Automatic Male Masturbator Heating Dock
Rated Voltage: 5.0V⎓ **Rated Power:** 10W

※ The electronic components are not waterproof, but soft sleeve is washable.

Product And Component Recycling Instructions

To protect the environment, after the disposal of this product or its components, as a responsible consumer, you are obligated to separate it from household waste and deliver it to qualified recycling centers. The recycling centers will then handle the dismantling, recycling, and reuse of the components in accordance with local regulations.
※ Before discarding the appliance, it is essential to remove the batteries from the device.
※ When removing the batteries, the device must be powered off.
※ Batteries should be disposed of safely.

Customer Service

※ We guarantee a one-year warranty for the entire product.
※ After-sales service: Please keep your order number and product name, then contact us via email.
※ If you have any questions during the service, please reach out to us via email.
※ We will provide you with a satisfactory response within 24 hours.
※ sales@cyberskin.com.

FCC Warning

This device complies with Part 15 of the FCC Rules. Operation is subject to the following two conditions:
(1) This device may not cause harmful interference, and (2) this device must accept any interference received, including interference that may cause undesired operation.

NOTE 1: This equipment has been tested and found to comply with the limits for a Class B digital device, pursuant to part 15 of the FCC Rules. These limits are designed to provide reasonable protection against harmful interference in a residential installation. This equipment generates, uses and can radiate radio frequency energy and, if not installed and used in accordance with the instructions, may cause harmful interference to radio communications. However, there is no guarantee that interference will not occur in a particular installation. If this equipment does cause harmful interference to radio or television reception, which can be determined by turning the equipment off and on, the user is encouraged to try to correct the interference by one or more of the following measures:
- Reorient or relocate the receiving antenna.
- Increase the separation between the equipment and receiver.
-Connect the equipment into an outlet on a circuit different from that to which the receiver is connected.

-Consult the dealer or an experienced radio/TV technician for help.
NOTE 2: Any changes or modifications to this unit not expressly approved by the party responsible for compliance could void the user's authority to operate the equipment.

The device has been evaluated to meet general RF exposure requirement. The device can be used in portable exposure condition without restriction.

MADE IN CHINA