E03pro-蓝牙音响英文说明书20250311

竖版风琴折页正反两面　157铜版纸　成品尺寸：120*120mm

面 1 2 3 4 底

E03Pro **Floating speaker**

Instruction Manual

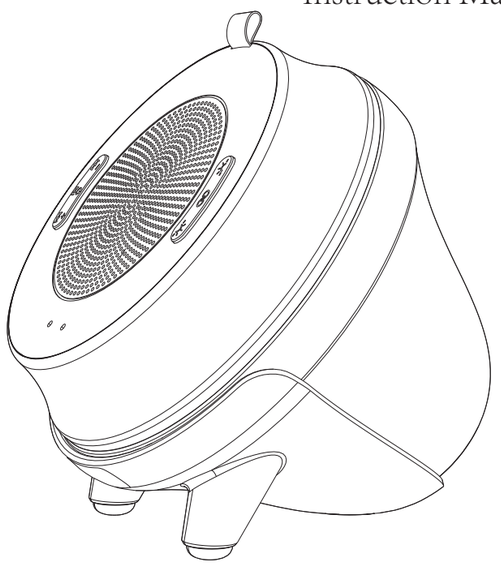

1 OPERATION PANEL

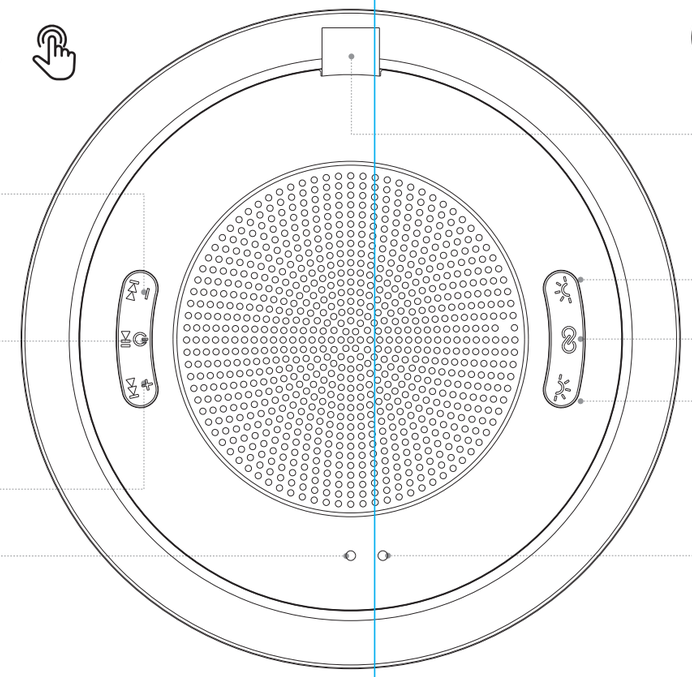

Short Press: Last Song
Long Press: Volume Down
VOL−

Long Press: Power On/Off
Short Press: Play/Pause

Short Press: Next Song
Long Press: Volume Up
VOL+

Device Reset Hole

2

Portable Strap

Lower set of 3D phantom RGB lights
Short Press: Switch Lights
Long Press: Turn Off The Lights

TWS Connect/Disconnect

Upper set of surround RGB lights
Short Press: Switch Lights
Long Press: Turn Off The Lights

Vent Hole

3

TPYE-C Charging USB Port

Charging Indicator
Red Light
ON: Charging
OFF: Fully Charged

Bluetooth Indicator
Blue Light
Fast Flashing: Waiting For Pairing
Light On: connected
Slow Flashing: Playing

Embedded Waterproof Cover

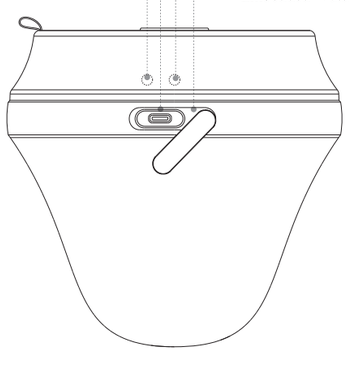

MAIN PARAMETERS & FUNCTIONS 4

- Model: E03pro (Bluetooth Pair Name: E03pro)
- Play Music: Bluetooth (TWS)
- Lights: Two Independent RGB Lights
- Bluetooth: 5.4/TWS
- Waterproof Level: IPX7
- Input Voltage: Type-C DC 5V 2A
- Stand: Split Desktop Stand
- Net Weight: 1.6lb/730g
- Device Size: 5.5X5.3inch/ 140mmX135mm
- Charging Time: ≈4-5H
- Playback Time: ≈4-6H

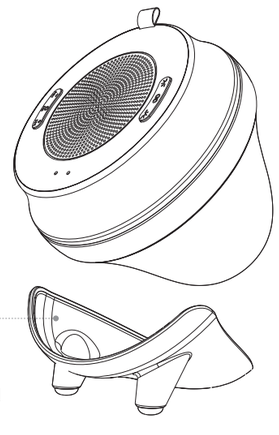

Split Desktop Stand

NOTE 5

1. Do not allow young children to operate or play with this speaker unattended to prevent injury.
2. Avoid using abrasive cleaners on this speaker.
3. Keep the product away from sharp objects to prevent scratches.
4. Dropping the product may damage internal components and circuits.
5. Unauthorized disassembly may damage the internal structure.
6. Do not dispose of the speaker in fire, as the battery may explode.
7. Water can obstruct Bluetooth signals. If fully submerged, Bluetooth may disconnect; simply reconnect to resume use.
8. Water in the speaker output may temporarily reduce volume. Vibration will naturally expel water from the output.

Contact:

Customer Support email: WNWT-CS@outlook.com

We truly value your feedback! If you experience missing accessories, unexpected product issues, or any other concerns, please:

Contact our support team or Message us through your order page.

We'll promptly resolve your request to ensure a smooth experience!

FCC Warning

This device complies with part 15 of the FCC Rules. Operation is subject to the following two conditions: (1) This device may not cause harmful interference, and (2) this device must accept any interference received, including interference that may cause undesired operation.

Any Changes or modifications not expressly approved by the party responsible for compliance could void the user's authority to operate the equipment.

Note: This equipment has been tested and found to comply with the limits for a Class B digital device, pursuant to part 15 of the FCC Rules. These limits are designed to provide reasonable protection against harmful interference in a residential installation. This equipment generates uses and can radiate radio frequency energy and, if not installed and used in accordance with the instructions, may cause harmful interference to radio communications. However, there is no guarantee that interference will not occur in a particular installation. If this equipment does cause harmful interference to radio or television reception, which can be determined by turning the equipment off and on, the user is encouraged to try to correct the interference by one or more of the following measures:

-Reorient or relocate the receiving antenna.

-Increase the separation between the equipment and receiver.

-Connect the equipment into an outlet on a circuit different from that to which the receiver is connected.

-Consult the dealer or an experienced radio/TV technician for help.

* RF warning for Portable device:

The device has been evaluated to meet general RF exposure requirement. The device can be used in portable exposure condition without restriction.