RADIO TEST REPORT

Applicant	:	LYSORA TECHNOLOGY INC.
Address of Applicant	:	8 THE GREEN, STE A, DOVER, KENT COUNTY, DELAWARE 19901, USA
Manufacturer	:	LYSORA TECHNOLOGY INC.
Address of Manufacturer	:	8 THE GREEN, STE A, DOVER, KENT COUNTY, DELAWARE 19901, USA
Equipment under Test	:	Wireless Bridge
Model No.	:	L2529
FCC ID	:	2BPSN-L2529
IC	:	34118-L2529
Test Standard(s)	:	FCC Rules and Regulations Part 15.407, ANSI C63.10-2020, RSS-247 Issue 4 July 24, 2025, ANSI C63.10-2020+Cor.1-2023+C63.10a-2024+ Errata to C63.10a-2024 905462 D02 UNII DFS Compliance Procedures New Rules v02
Report No.	:	DDT-RE25082809-1E04
Issue Date	:	2025/12/26
Issue By	:	Guangdong Dongdian Testing Service Co., Ltd. Unit 2, Building 1, No. 17, Zongbu 2nd Road, Songshan Lake Park, Dongguan, Guangdong, China, 523808

REPORT

Table of Contents

1. Summary of Test Results 6
2. General Test Information 7
2.1. Description of EUT 7
2.2. User Access Restrictions 7
2.3. Channel Loading/ Data Streaming 7
2.4. Accessories of EUT 7
2.5. Assistant equipment used for test 8
2.6. Test Condition 8
2.7. DFS Band Carrier Frequencies 8
2.8. Deviations of test standard 8
2.9. Test environment conditions 9
2.10. Test laboratory 9
2.11. Measurement uncertainty 10
3. Equipment Used During Test 11
4. General DFS requirements 12
4.1. Applicability of DFS requirements 12
4.2. Limit 13
4.3. Parameters of radar test waveforms 13
5. Calibration of radar waveform 17
5.1. DFS Threshold Level 17
5.2. Radar Waveform Calibration Procedure: 17
5.3. Conducted Calibration Setup 17
5.4. Radar Waveform Calibration Result 18
5.5. Test Graphs 19
6. Channel Availability Check Time (CAC) 26
6.1. Channel Availability Check Limit 26
6.2. Test Procedure 26
6.3. Test setup 26
6.4. Test Result 26
6.5. Test Graphs 27
7. Channel Closing Transmission Time, Channel Move Time and Non-Occupancy Period 29
7.1. In-service Monitoring Limit 29
7.2. Test Procedure 29
7.3. Test setup 30
7.4. Test result 30

7.5. Detection Bandwidth 32
7.6. Detection Bandwidth Limit 32
7.7. Test Procedure 32
7.8. Test setup 33
7.9. Test Result 33
8. Statistical Performance Check 35
8.1. Statistical Performance Check Limit 35
8.2. Test Procedure 35
8.3. Test setup 36
8.4. Test Result 37
9. Statistical Performance Check of Bridge Mode 82
9.1. Limit 82
9.2. Test Procedure 82
9.3. Test setup 83
9.4. Test Result 84
10. Test Setup Photograph 87
11. Photos of the EUT 88

Test Report Declare

Applicant	:	LYSORA TECHNOLOGY INC.
Address of Applicant	:	8 THE GREEN, STE A, DOVER, KENT COUNTY, DELAWARE 19901, USA
Equipment under Test	:	Wireless Bridge
Model No.	:	L2529
Manufacturer	:	LYSORA TECHNOLOGY INC.
Address of Manufacturer	:	8 THE GREEN, STE A, DOVER, KENT COUNTY, DELAWARE 19901, USA

Test Standard Used:

FCC Rules and Regulations Part 15.407,
ANSI C63.10-2020,
RSS-247 Issue 4 July 24, 2025,
ANSI C63.10-2020+Cor.1-2023+C63.10a-2024+
Errata to C63.10a-2024
905462 D02 UNII DFS Compliance Procedures New Rules v02

We Declare:

The equipment described above is tested by Guangdong Dongdian Testing Service Co., Ltd. and in the configuration tested the equipment complied with the standards specified above. The test results are contained in this test report and Guangdong Dongdian Testing Service Co., Ltd. is assumed of full responsibility for the accuracy and completeness of these tests.

Report No.:	DDT-RE25082809-1E04		
Date of Receipt:	2025/08/28	**Date of Test:**	2025/08/28 - 2025/12/25

Created: Tiger Mo	Reviewed: Johnson Huang	Approved: Ella Gong
Tiger Mo	Johnson Huang	Ella Gong
2025/12/25	2025/12/26	2025/12/26

Note: This report applies to above tested sample only. This report shall not be reproduced in parts without written approval of Guangdong Dongdian Testing Service Co., Ltd.

Revision History

Version	Revision Content	Issue Date	Approved
V0	Initial issue	2025/12/26	Ella Gong

1. Summary of Test Results

The EUT have been tested according to the applicable standards as referenced below.				
Description of Test Item	**Description of Test**	**Standard**	**Verdict**	**Remark**
Detection Bandwidth	U-NII Detection Bandwidth	KDB 905462 7.8.1	Pass	100% of the 99% BW
Performance Requirements Check	Initial Channel Availability Check Time CAC)	KDB 905462 7.8.2.1	Pass	CAC ≥60 sec
	Radar Burst at the Beginning of the CAC	KDB 905462 7.8.2.2	Pass	Detection Threshold: -63 dBm
	Radar Burst at the End of the CAC	KDB 905462 7.8.2.3	Pass	Detection Threshold: -63 dBm
In-Service Monitoring	Channel Move Time	KDB 905462 7.8.3	Pass	CMT ≤ 10 sec
	Channel Closing Transmission Time	KDB 905462 7.8.3	Pass	CCTT ≤60 ms starting at CMT 200ms
	Non-Occupancy Period	KDB 905462 7.8.3	Pass	NOP≥30 Min
Radar Detection	Statistical Performance Check	KDB 905462 7.8.4	Pass	Table 5- 7 (KDB 905462)

2. General Test Information

2.1. Description of EUT

EUT Name	:	Wireless Bridge
Model Number	:	L2529
Difference of model number	:	/
EUT Function Description	:	Please reference user manual of this device
Power Supply	:	24 VDC non-standard PoE power supply or 12 VDC power supply from DC port

Operating mode	:	☒Master ☐Client Without Radar Detection ☐Client with Radar Detection
Communication mode	:	☒Load Based ☐Frame Based
TPC function	:	☒With TPC ☐Without TPC
Power-on cycle	:	147s
Antenna	:	Antenna 1: Integrated Antenna, Maximum PK gain: 13.54dBi Antenna 2: Integrated Antenna, Maximum PK gain: 14.11dBi
Pathloss	:	The antenna connector impedance 50 Ohms and external cable pathloss: 2 dB (According to the manufacturer's claims)
Maximum EIRP	:	29.48 dBm

Note: The above EUT information is declared by manufacturer and for more detailed features description please refer to the manufacturer's specifications or User's Manual. The above Antenna information is declared by manufacturer and for more detailed features description please refer to the manufacturer's specifications, the laboratory shall not be held responsible.

"☒" means to be chosen or applicable; "□" means don't to be chosen or not applicable; This note applies to entire report.

2.2. User Access Restrictions

DFS controls (hardware or software) related to radar detection are NOT accessible to the user. Manufacturer statement confirming that information regarding the parameters of the detected Radar Waveforms is not available to the end user.

2.3. Channel Loading/ Data Streaming

Software to ping the client is permitted to simulate data transfer with random ping intervals. Minimum channel loading of approximately 17

2.4. Accessories of EUT

Description of Accessories	Manufacturer	Model number	Other
SWITCHING POWER ADAPTOR	Dongguan Shilong Fuhua Electronic Co.,Ltd.	UES15LCP-240060SPA	INPUT: 100-240V~50/60Hz,0.5A OUTPUT: DC 24.0V/0.6A,14.4W

2.5. Assistant equipment used for test

Assistant equipment	Manufacturer	Model number	EMC Compliance	SN
NoteBook	Lenovo	I7-4810MQ	N/A	00331-1000-00001-AA816

2.6. Test Condition

The worst case mode for following Tests	
Test Condition	Conducted measurement The EUT configured to operated at the highest transmitter output power setting. If more than one antenna assembly is intended for this power setting, the gain of the antenna assembly with the lowest gain shall be used. The DFS radar test signals have been aligned to the direction corresponding to the EUT's maximum antenna gain.
Modulation Mode	802.11ac(VHT20),802.11ac(VHT40),802.11ac(VHT80)

2.7. DFS Band Carrier Frequencies

Frequency Band	Bandwidth	Channel No.	Frequency (MHz)
U-NII-2A	20 MHz	52	5260
		56	5280
		60	5300
		64	5320
	40 MHz	54	5270
		62	5310
	80 MHz	58	5290
U-NII-2C	20 MHz	100	5500
		104	5520
		108	5540
		112	5560
		116	5580
		132	5660
		136	5680
		140	5700
	40 MHz	102	5510
		110	5550
		134	5670
	80 MHz	106	5530
		138	5690

2.8. Deviations of test standard

No Deviation.

2.9. Test environment conditions

During the measurement the environmental conditions were within the listed ranges:

Temperature range:	21-25℃
Humidity range:	40-75%
Pressure range:	86-106 kPa

2.10. Test laboratory

Dongguan Dongdian Testing Service Co., Ltd.

Add.: No. 17, Zongbu Road 2, Songshan Lake Sci&Tech, Industry Park, Dongguan City, Guangdong Province, China, 523808.

Tel.: +86-0769-38826678, http://www.dgddt.com, Email: ddt@dgddt.com.

CNAS Accreditation No. L6451; A2LA Accreditation Number: 3870.01

FCC Designation Number: CN1182, Test Firm Registration Number: 540522

Innovation, Science and Economic Development Canada Site Registration Number: 10288A

Conformity Assessment Body identifier: CN0048

VCCI facility registration number: C-20087, T-20088, R-20123, R-20155, G-20118

2.11. Measurement uncertainty

Test Item	Uncertainty
Bandwidth	1.1%
Peak Output Power (Conducted) (Spectrum Analyzer)	0.86 dB (10 MHz ≤ f < 3.6 GHz);
	1.38 dB (3.6 GHz ≤ f < 8 GHz)
Peak Output Power (Conducted) (Power Sensor)	0.74 dB
Power Spectral Density	0.74 dB (10 MHz ≤ f < 3.6 GHz);
	1.38 dB (3.6 GHz ≤ f < 8 GHz)
Frequencies Stability	6.7 x 10^{-8} (Antenna couple method)
	5.5 x 10^{-8} (Conducted method)
Conducted Spurious Emissions	0.86 dB (10 MHz ≤ f < 3.6 GHz);
	1.40 dB (3.6 GHz ≤ f < 8 GHz)
	1.66 dB (8 GHz ≤ f < 22 GHz)
Uncertainty for Radio Frequency (RBW < 20 kHz)	3×10^{-8}
Temperature	0.4 ℃
Humidity	2 %
Uncertainty for Radiation Emission Test (9 kHz – 30 MHz)	3.44 dB
Uncertainty for Radiation Emission Test (30 MHz - 1 GHz)	4.70 dB (Antenna Polarize: V)
	4.84 dB (Antenna Polarize: H)
Uncertainty for Radiation Emission Test (1 GHz - 40 GHz)	4.10 dB (1 - 6 GHz)
	4.40 dB (6 GHz - 18 GHz)
	3.54 dB (18 GHz - 26 GHz)
	4.30 dB (26 GHz - 40 GHz)
Uncertainty for Power Line Conduction Emission Test	3.32 dB (150 kHz - 30 MHz)
Note: This uncertainty represents an expanded uncertainty expressed at approximately the 95% confidence level using a coverage factor of k=2.	

3. Equipment Used During Test

Equipment	Manufacturer	Model No.	Serial Number	Due Date
☒ RF Connected Test (RF Measurement System 1#)				
SIGNAL ANALYZER	R&S	FSQ26	101272	2026/03/28
Wideband Radio Communication Tester	R&S	CMW500	117491	2026/03/28
MXG Vector Signal Generator	KEYSIGHT	N5182B	MY59100192	2026/03/28
MXG Vector Signal Generator	Agilent	N5182A	MY19060405	2026/03/28
RF Control Unit	Tonscend	JS0806-2	158060010	2026/03/28
TEMP&HUMI Programmable Chamber	ZHIXIANG	ZXGDJS-150L	ZX170110-A	2026/03/28
Test Software	Tonscend	JS1120-3	Ver.3.2.22	N/A

4. General DFS requirements

4.1. Applicability of DFS requirements

Table 1: Applicability of DFS Requirements Prior to Use of a Channel

Requirement	Operational Mode		
	☒Master	☐Client Without Radar Detection	☐Client with Radar Detection
Non-Occupancy Period	Yes	Not required	Yes
DFS Detection Threshold	Yes	Not required	Yes
Channel Availability Check Time	Yes	Not required	Not required
U-NII Detection Bandwidth	Yes	Not required	Yes

Table 2: Applicability of DFS requirements during normal operation

Requirement	Operational Mode	
	☒Master Device or Client with Radar Detection	☐Client Without Radar Detection
DFS Detection Threshold	Yes	Not required
Channel Closing Transmission Time	Yes	Yes
Channel Move Time	Yes	Yes
U-NII Detection Bandwidth	Yes	Not required

Additional requirements for devices with multiple bandwidth modes	☒Master Device or Client with Radar Detection	☐Client Without Radar Detection
U-NII Detection Bandwidth and Statistical Performance Check	All BW modes must be tested	Not required
Channel Move Time and Channel Closing Transmission Time	Test using widest BW mode available	Test using the widest BW mode available for the link
All other tests	Any single BW mode	Not required
Note: Frequencies selected for statistical performance check should include several frequencies within the radar detection bandwidth and frequencies near the edge of the radar detection bandwidth. For 802.11 devices it is suggested to select frequencies in each of the bonded 20 MHz channels and the channel center frequency.		

4.2. Limit

(1) DFS Detection Thresholds

Table 3: DFS Detection Thresholds for Master Devices and Client Devices with Radar Detection

Maximum Transmit Power	Value (See Notes 1, 2, and 3)
EIRP ≥ 200 milliwatt	-64 dBm
EIRP < 200 milliwatt and power spectral density < 10 dBm/MHz	-62 dBm
EIRP < 200 milliwatt that do not meet the power spectral density requirement	-64 dBm
Note 1: This is the level at the input of the receiver assuming a 0 dBi receive antenna. Note 2: Throughout these test procedures an additional 1 dB has been added to the amplitude of the test transmission waveforms to account for variations in measurement equipment. This will ensure that the test signal is at or above the detection threshold level to trigger a DFS response. Note3: EIRP is based on the highest antenna gain. For MIMO devices refer to KDB Publication 662911 D01.	

(2) DFS Response Requirements

Table 4: DFS Response Requirement Values

Parameter	Value
Non-occupancy period	Minimum 30 minutes
Channel Availability Check Time	60 seconds
Channel Move Time	10 seconds See Note 1.
Channel Closing Transmission Time	200 milliseconds + an aggregate of 60 milliseconds over remaining 10 second period. See Notes 1 and 2.
U-NII Detection Bandwidth	Minimum 100% of the U-NII 99% transmission power bandwidth. See Note 3.
Note 1: Channel Move Time and the Channel Closing Transmission Time should be performed with Radar Type 0. The measurement timing begins at the end of the Radar Type 0 burst. Note 2: The Channel Closing Transmission Time is comprised of 200 milliseconds starting at the beginning of the Channel Move Time plus any additional intermittent control signals required facilitating a Channel move (an aggregate of 60 milliseconds) during the remainder of the 10 second period. The aggregate duration of control signals will not count quiet periods in between transmissions. Note 3: During the U-NII Detection Bandwidth detection test, radar type 0 should be used. For each frequency step the minimum percentage of detection is 90 percent. Measurements are performed with no data traffic.	

4.3. Parameters of radar test waveforms

This section provides the parameters for required test waveforms, minimum percentage of successful detections, and the minimum number of trials that must be used for determining DFS conformance. Step intervals of 0.1 microsecond for Pulse Width, 1 microsecond for PRI, 1 MHz for chirp width and 1 for the number of pulses will be utilized for the random determination of specific test waveforms.

(1) Short Pulse Radar Test Waveforms

Table 5 – Short Pulse Radar Test Waveforms

Radar Type	Pulse Width (μsec)	PRI(μsec)	Number of Pulses	Minimum Percentage of Successful Detection	Minimum Number of Trials
0	1	1428	18	See Note 1	See Note 1
1	1	Test A: 15 unique PRI values randomly selected from the list of 23 PRI values in Table 5a	$\text{Roundup}\left\{\left(\frac{1}{360}\right)\cdot\left(\frac{19\cdot 10^6}{\text{PRI}_{\mu\text{sec}}}\right)\right\}$	60%	30
		Test B: 15 unique PRI values randomly selected within the range of 518-3066 μsec, with a minimum increment of 1 μsec, excluding PRI values selected in Test A			
2	1-5	150-230	23-29	60%	30
3	6-10	200-500	16-18	60%	30
4	11-20	200-500	12-16	60%	30
Aggregate (Radar Types 1-4)				80%	120
Note 1: Short Pulse Radar Type 0 should be used for the detection bandwidth test, channel move time, and channel closing time tests.					

A minimum of 30 unique waveforms are required for each of the Short Pulse Radar Types 2 through 4. If more than 30 waveforms are used for Short Pulse Radar Types 2 through 4, then each additional waveform must also be unique and not repeated from the previous waveforms. If more than 30 waveforms are used for Short Pulse Radar Type 1, then each additional waveform is generated with Test B and must also be unique and not repeated from the previous waveforms in Tests A or B. For example if in Short Pulse Radar Type 1 Test B a PRI of 3066 μsec is selected, the number of pulses would be Roundup {(1/360)×(19×106/3066)} = Round up {17.2} = 18.

(2) Long Pulse Radar Test Waveform

Table 6 – Long Pulse Radar Test Waveform

Radar Type	Pulse Width (μsec)	Chirp Width (MHz)	PRI (μsec)	Number of Pulses per Burst	Number of Bursts	Minimum Percentage of Successful Detection	Minimum Number of Trials
5	50-100	5-20	1000-2000	1-3	8-20	80%	30

The parameters for this waveform are randomly chosen. Thirty unique waveforms are required for the Long Pulse Radar Type waveforms. If more than 30 waveforms are used for the Long Pulse Radar Type waveforms, then each additional waveform must also be unique and not repeated from the previous waveforms.

Each waveform is defined as follows: 1) The transmission period for the Long Pulse Radar test signal is 12 seconds.

2) There are a total of 8 to 20 Bursts in the 12 second period, with the number of Bursts being randomly chosen. This number is Burst Count.

3) Each Burst consists of 1 to 3 pulses, with the number of pulses being randomly chosen. Each Burst within the 12 second sequence may have a different number of pulses.

4) The pulse width is between 50 and 100 microseconds, with the pulse width being randomly chosen. Each pulse within a Burst will have the same pulse width. Pulses in different Bursts may have different pulse widths.

5) Each pulse has a linear frequency modulated chirp between 5 and 20 MHz, with the chirp width being randomly chosen. Each pulse within a transmission period will have the same chirp width. The chirp is centered on the pulse. For example, with a radar frequency of 5300 MHz and a 20 MHz chirped signal, the chirp starts at 5290 MHz and ends at 5310 MHz.

6) If more than one pulse is present in a Burst, the time between the pulses will be between 1000 and 2000 microseconds, with the time being randomly chosen. If three pulses are present in a Burst, the random time interval between the first and second pulses is chosen independently of the random time interval between the second and third pulses.

7) The 12 second transmission period is divided into even intervals. The number of intervals is equal to Burst Count. Each interval is of length (12,000,000 / Burst Count) microseconds. Each interval contains one Burst. The start time for the Burst, relative to the beginning of the interval, is between 1 and [(12,000,000 / Burst Count) – (Total Burst Length) + (One Random PRI Interval)] microseconds, with the start time being randomly chosen. The step interval for the start time is 1 microsecond. The start time for each Burst is chosen randomly.

(3) Frequency Hopping Radar Test Waveform

Table 7 – Frequency Hopping Radar Test Waveform

Radar Type	Pulse Width (µsec)	PRI (µsec)	Pulses per Hop	Hopping Rate (kHz)	Hopping Sequence Length(msec)	Minimum Percentage of Successful Detection	Minimum Number of Trials
6	1	333	9	0.333	300	70%	30

For the Frequency Hopping Radar Type, the same Burst parameters are used for each waveform. The hopping sequence is different for each waveform and a 100-length segment is selected from the hopping sequence defined by that If a segment does not contain at least 1 frequency within the U-NII Detection Bandwidth of the UUT, then that segment is not used.

The first frequency in a hopping sequence is selected randomly from the group of 475 integer frequencies from 5250 – 5724 MHz. Next, the frequency that was just chosen is removed from the group and a frequency is randomly selected from the remaining 474 frequencies in the group. This

process continues until all 475 frequencies are chosen for the set. For selection of a random frequency, the frequencies remaining within the group are always treated as equally likely.

5. Calibration of radar waveform

5.1. DFS Threshold Level

DFS Threshold Level	
DFS Theshold Level: -63 dBm	At the antenna connector
	In front of the antenna
The Interference Radar Detection Threshold Level is -64 dBm + 13.54 [dBi] + 2 dB = -48.46 dBm. That had been taken into account the output power range and antenna gain.	

5.2. Radar Waveform Calibration Procedure:

(1) A 50 Ω load is connected in place of the spectrum analyzer, and the spectrum analyzer is connected to place of the master

(2) The following equipment setup was used to calibrate the conducted radar waveform. A vector signal generator was utilized to establish the test signal level for radar type 0-6. During this process there were no transmissions by either the master or client device. The spectrum analyzer was switched to the zero spans (time domain) at the frequency of the radar waveform generator. Peak detection was used. The spectrum analyzer resolution bandwidth (RBW) and video bandwidth (VBW) were set to 3 MHz. The spectrum analyzer had offset -2.0 dB to compensate RF cable loss 2.0 dB.

(3) The vector signal generator amplitude was set so that the power level measured at the spectrum analyzer -64 dBm + 13.54 [dBi] + 2 dB = -48.46 dBm. Capture the spectrum analyzer plots on radar waveform.

5.3. Conducted Calibration Setup

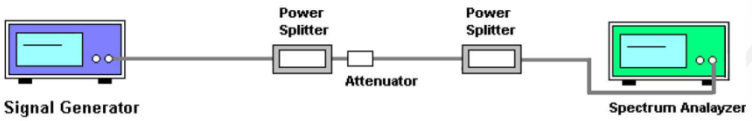

5.4. Radar Waveform Calibration Result

TestMode	Frequency[MHz]	Radar Type	Result	Limit[dbm]	Verdict
11A	5260	Type0	-48.46	-48.46	PASS
		Type1	-48.82	-48.46	PASS
		Type2	-48.78	-48.46	PASS
		Type3	-48.78	-48.46	PASS
		Type4	-48.78	-48.46	PASS
		Type5	-48.77	-48.46	PASS
		Type6	-48.80	-48.46	PASS
11AC40MIMO	5310	Type0	-48.56	-48.46	PASS
		Type1	-48.51	-48.46	PASS
		Type2	-48.51	-48.46	PASS
		Type3	-48.53	-48.46	PASS
		Type4	-48.56	-48.46	PASS
		Type5	-48.72	-48.46	PASS
		Type6	-48.56	-48.46	PASS
11AC80MIMO	5290	Type0	-48.53	-48.46	PASS
		Type1	-48.51	-48.46	PASS
		Type2	-48.47	-48.46	PASS
		Type3	-48.50	-48.46	PASS
		Type4	-48.53	-48.46	PASS
		Type5	-48.50	-48.46	PASS
		Type6	-48.55	-48.46	PASS

5.5. Test Graphs

11A_5260_Type0

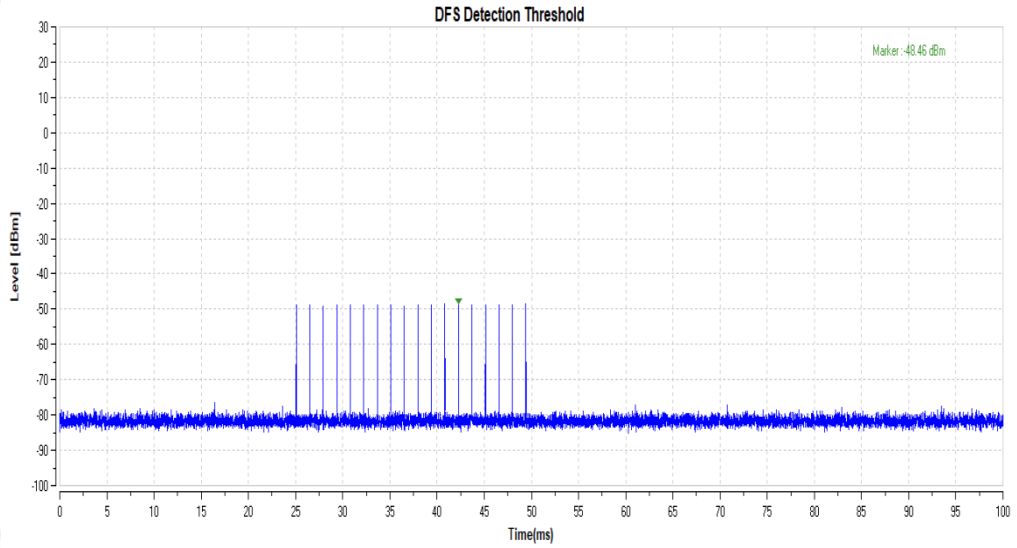

11A_5260_Type1

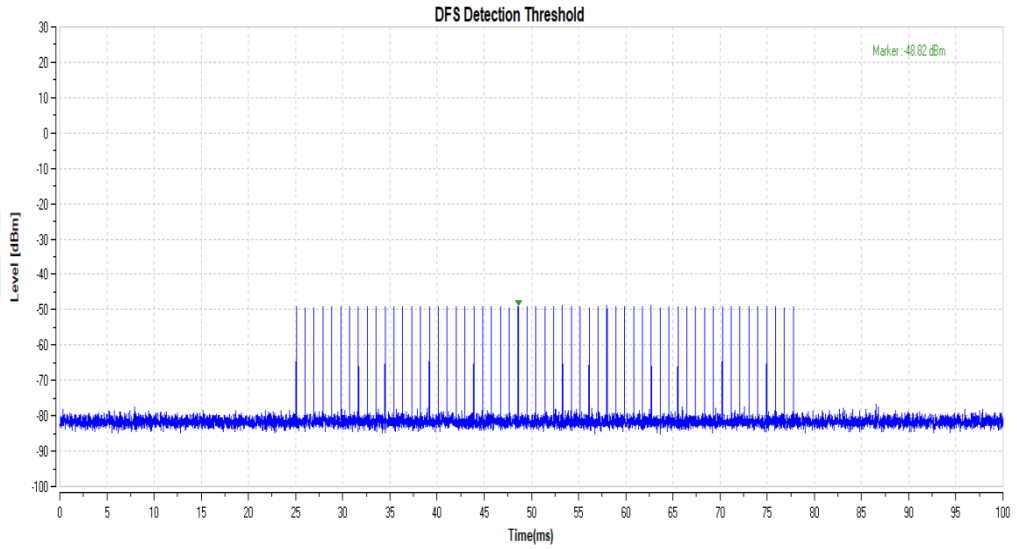

11A_5260_Type2

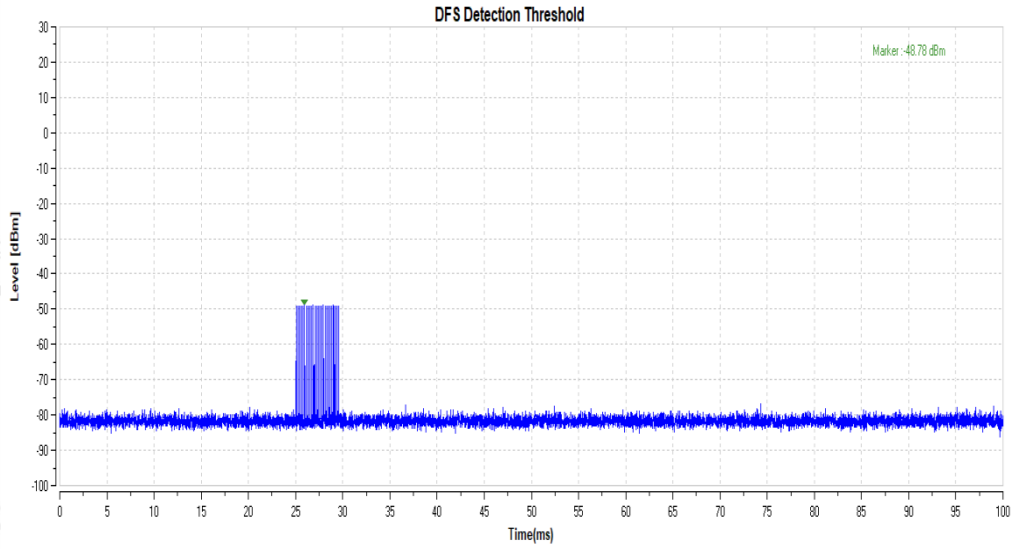

11A_5260_Type3

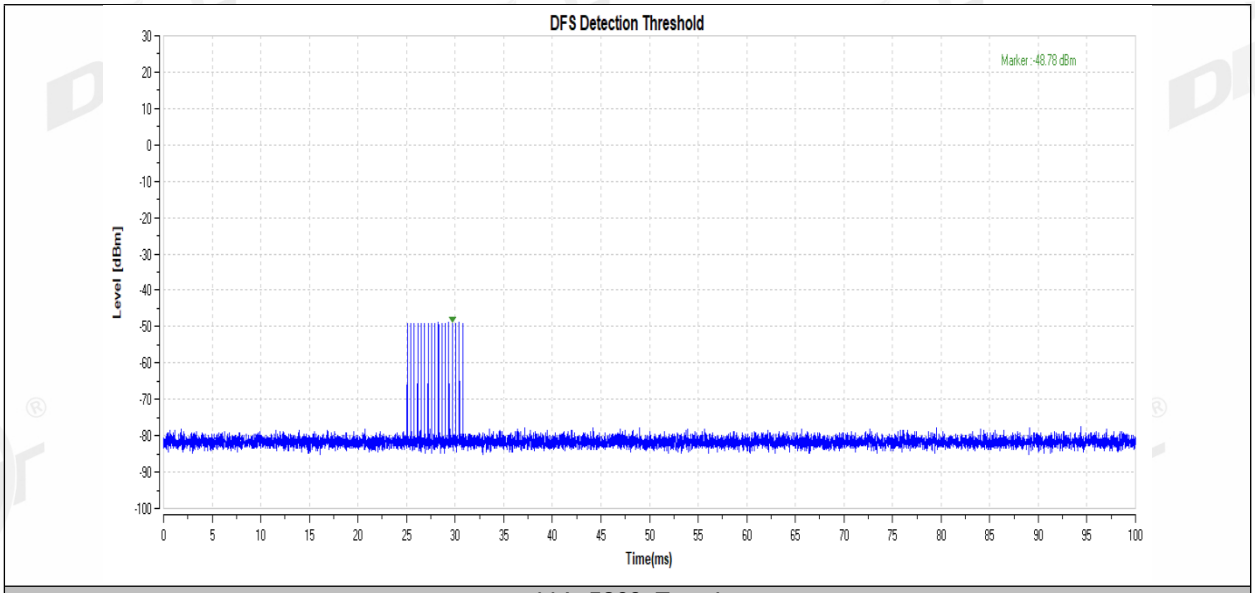

11A_5260_Type4

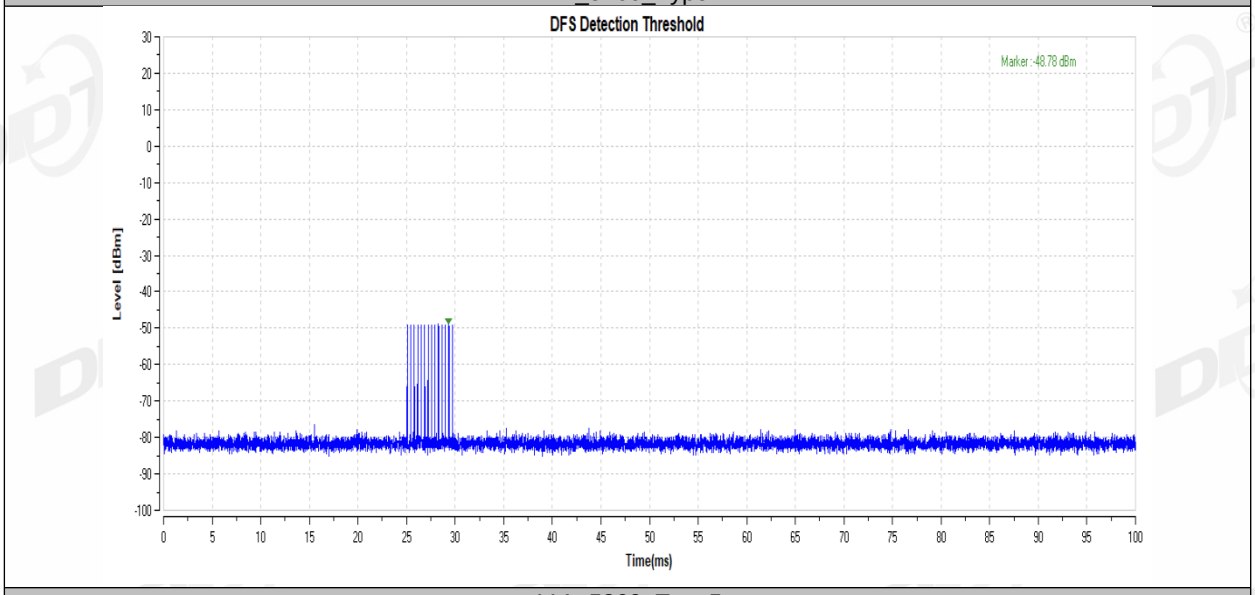

11A_5260_Type5

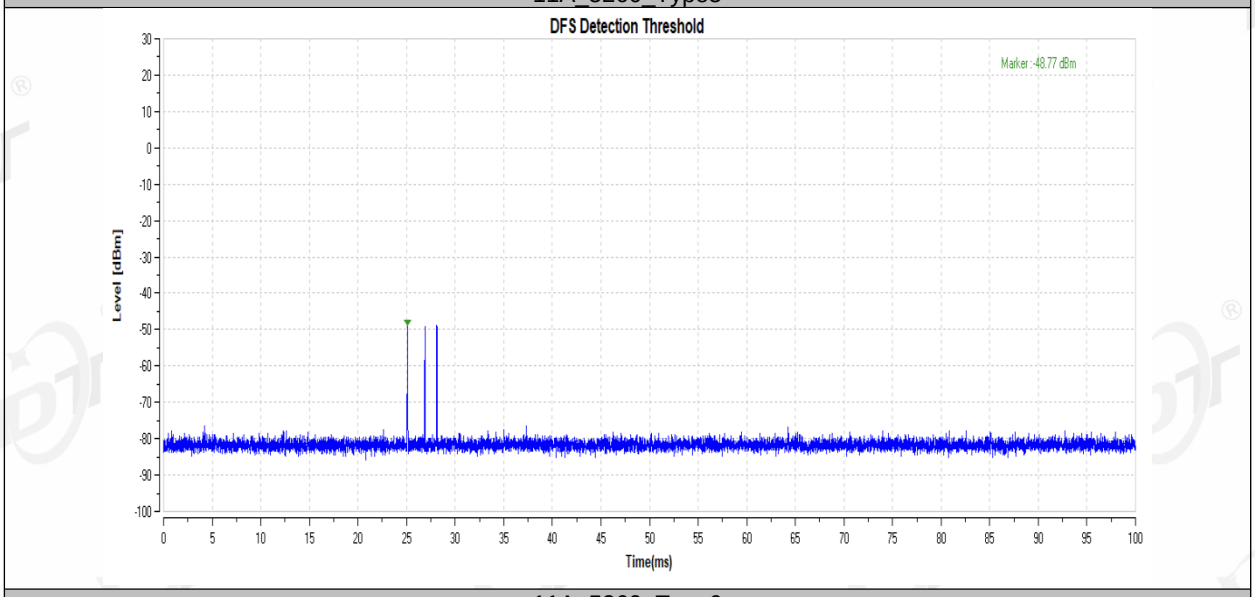

11A_5260_Type6

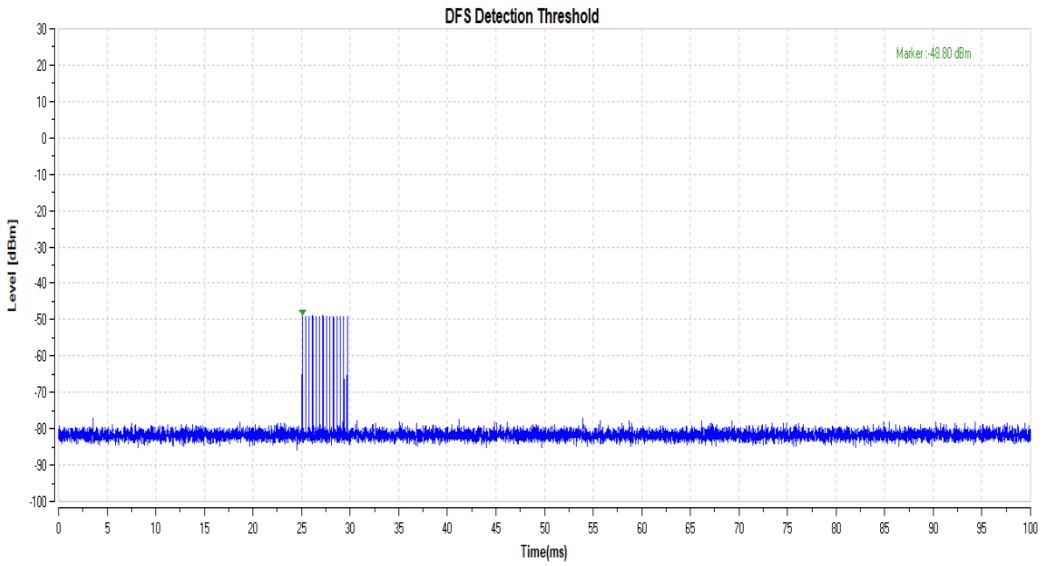

11AC40MIMO_5310_Type0

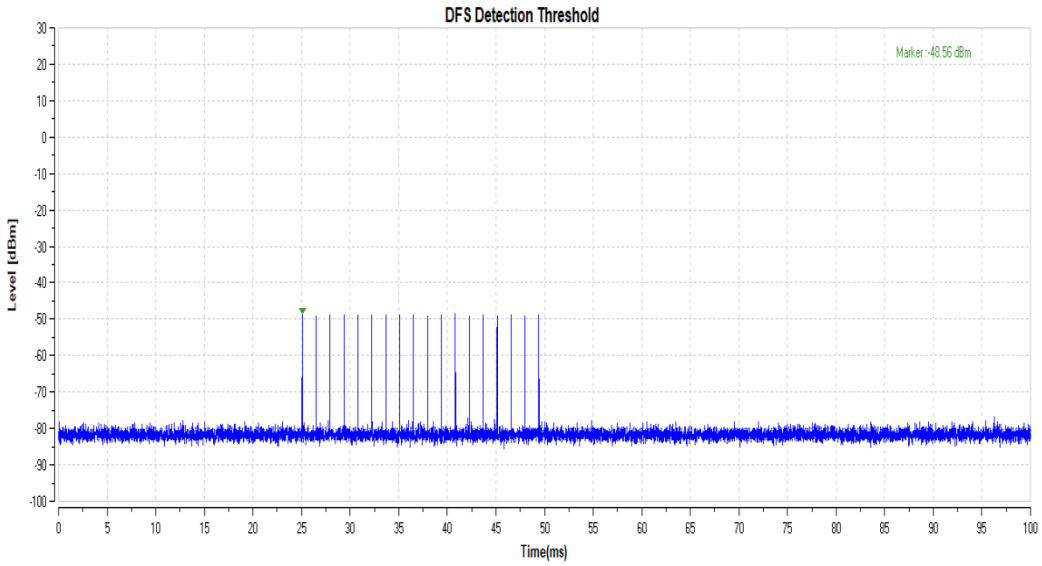

11AC40MIMO_5310_Type1

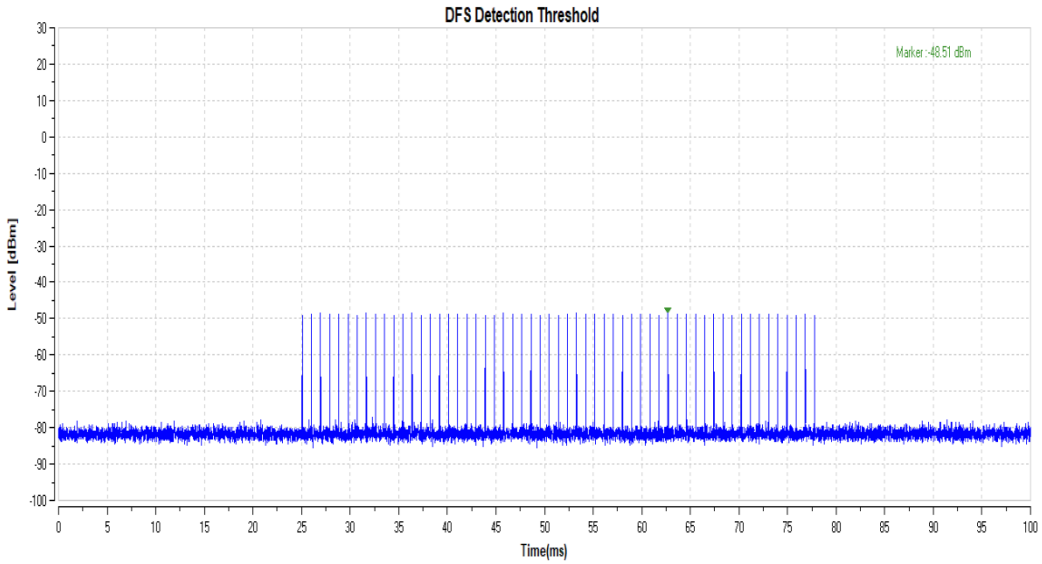

11AC40MIMO_5310_Type2

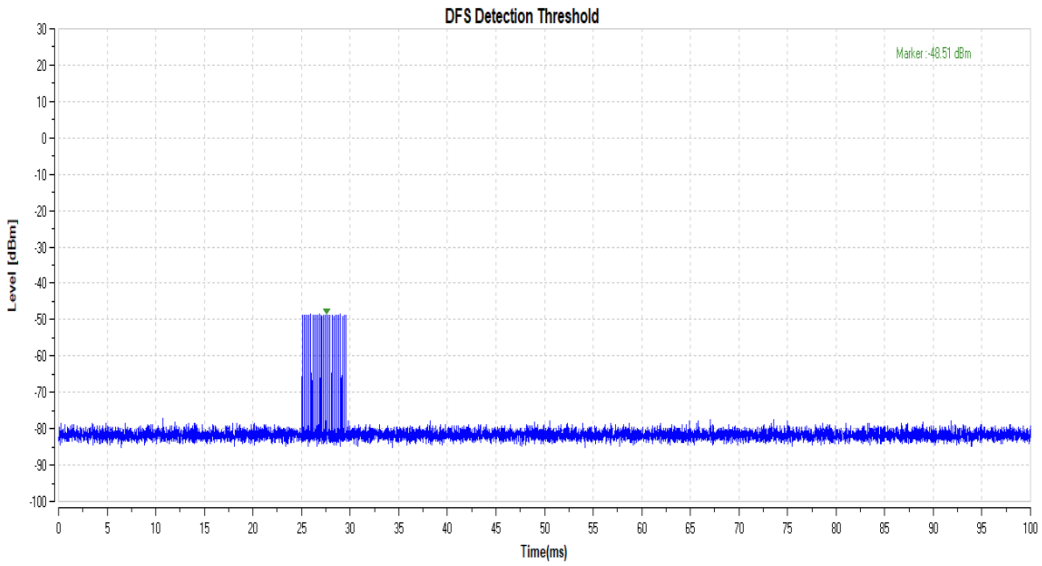

11AC40MIMO_5310_Type3

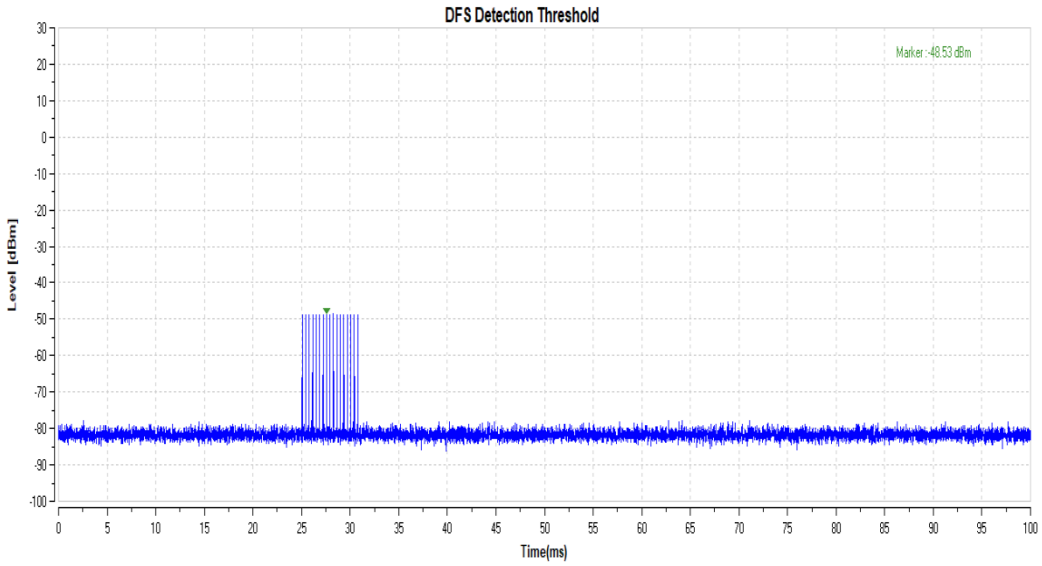

11AC40MIMO_5310_Type4

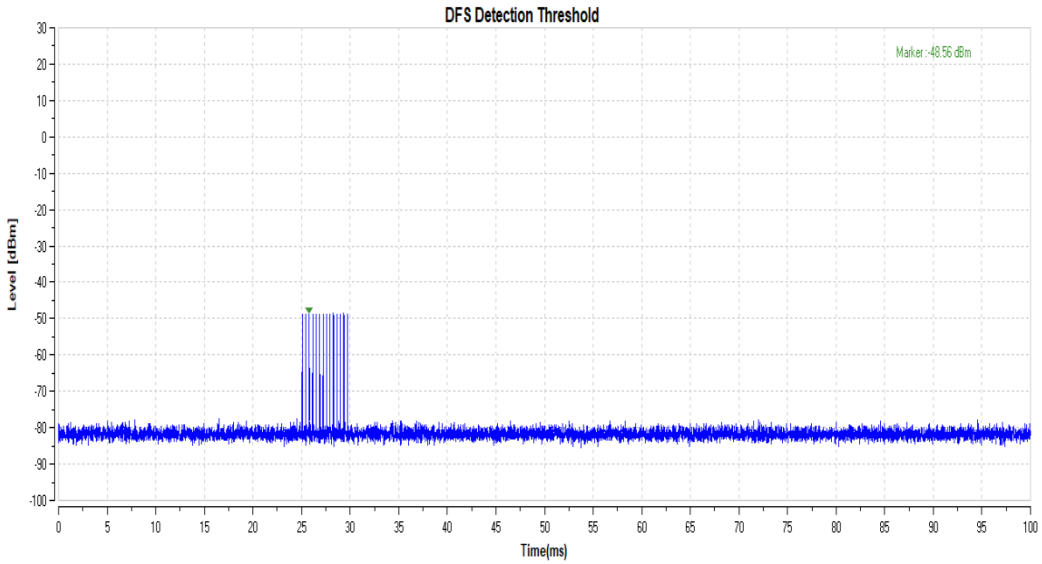

11AC40MIMO_5310_Type5

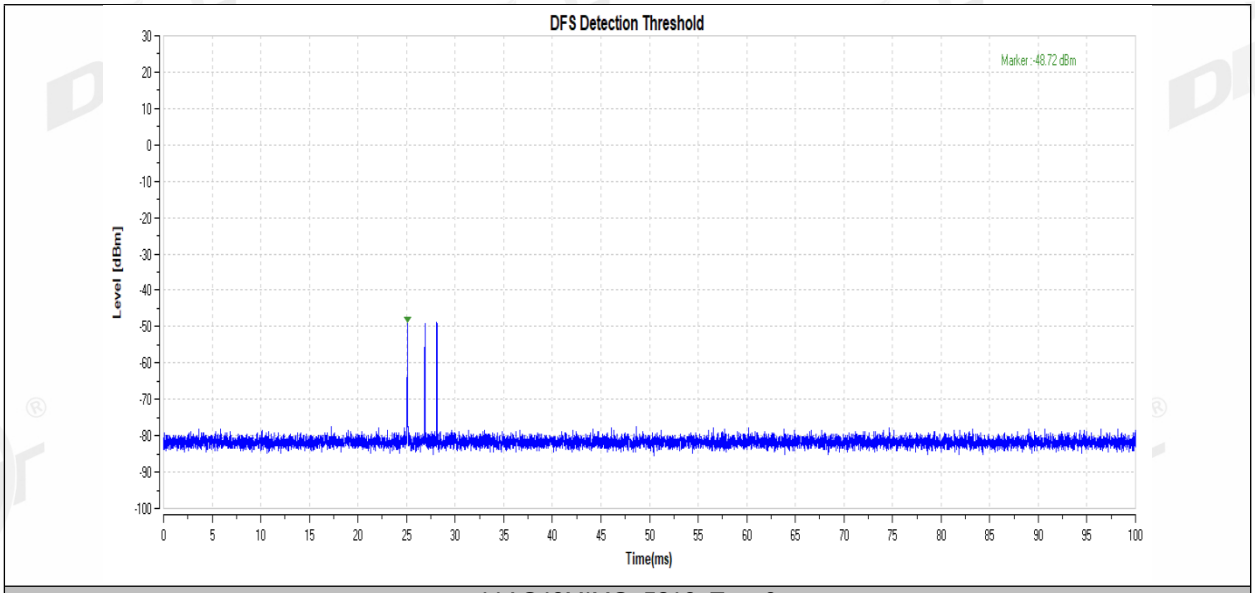

11AC40MIMO_5310_Type6

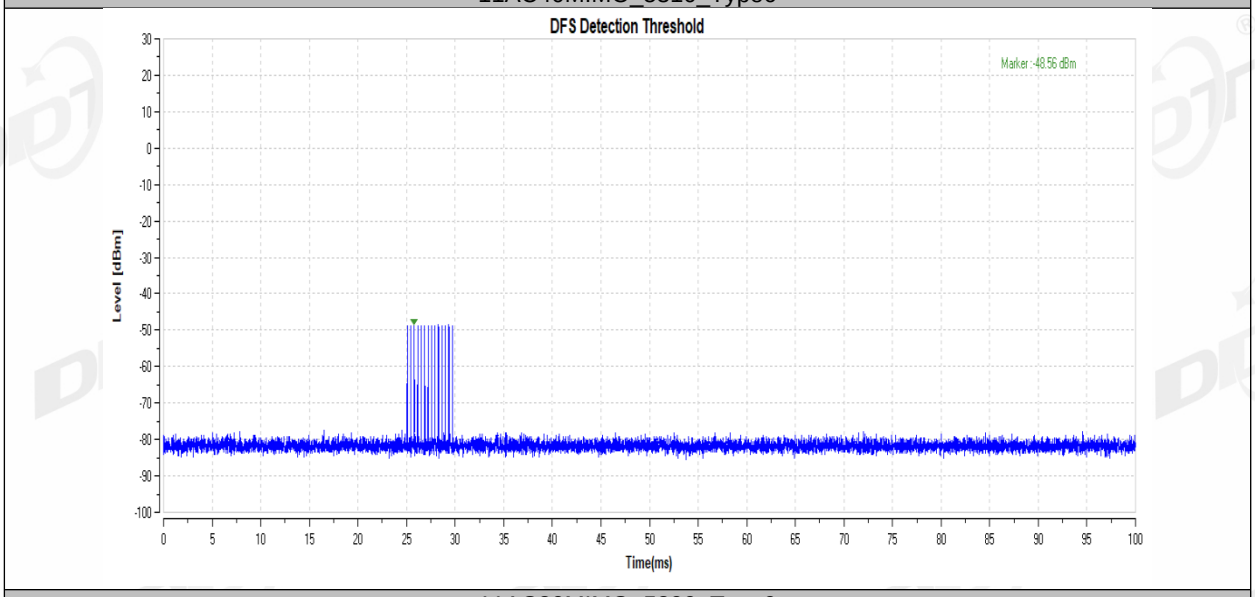

11AC80MIMO_5290_Type0

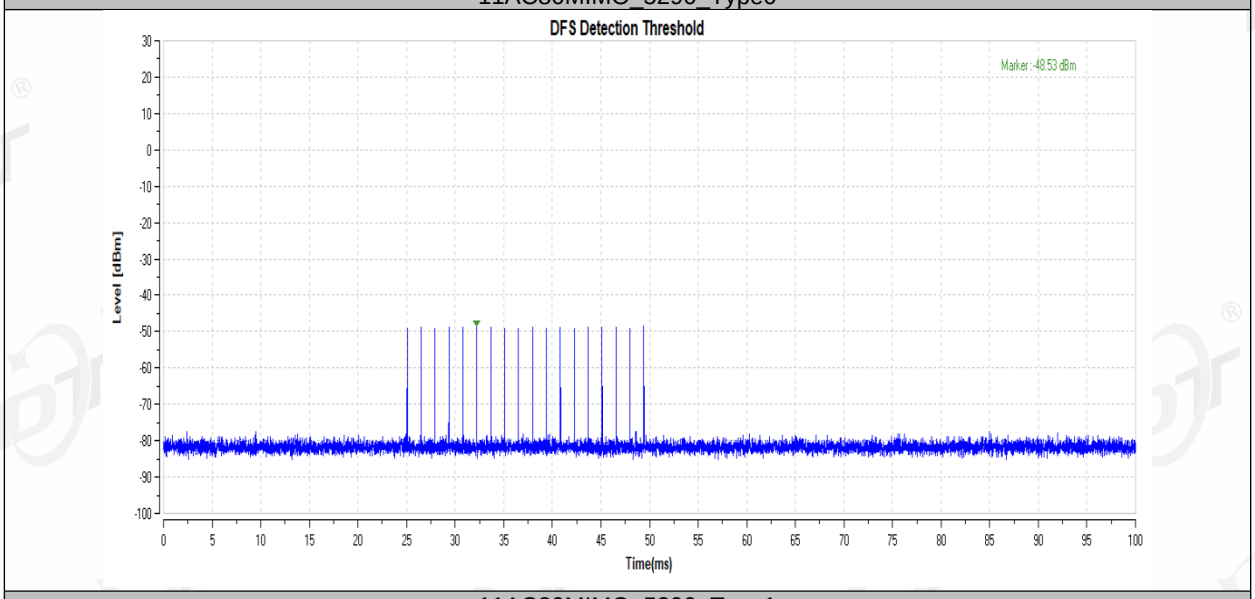

11AC80MIMO_5290_Type1

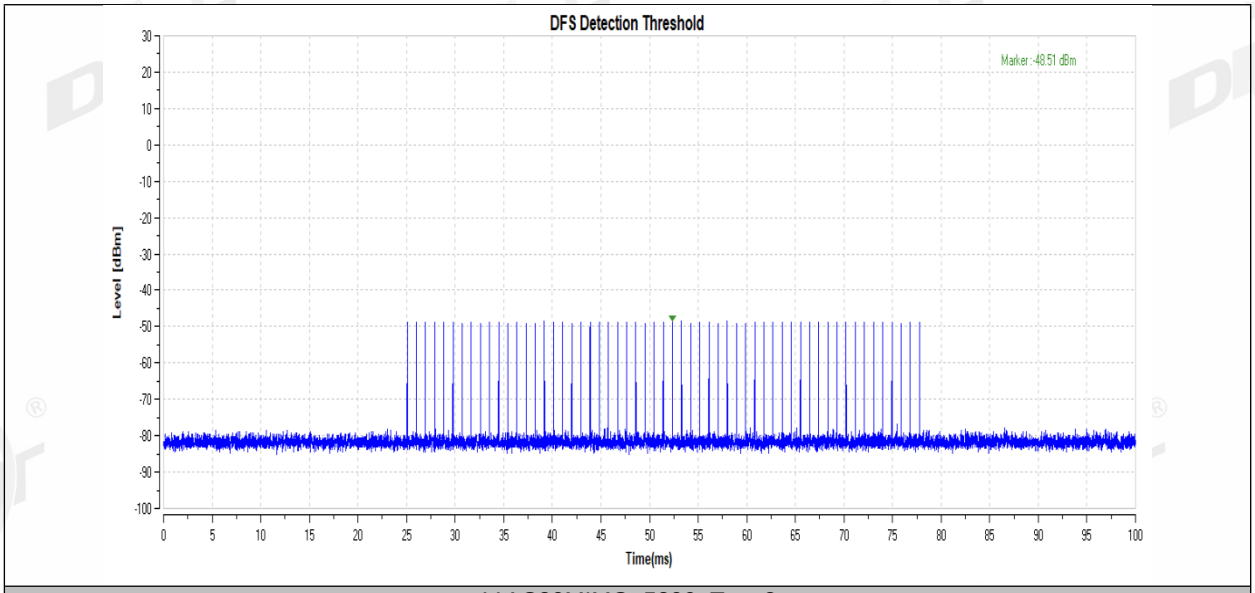

11AC80MIMO_5290_Type2

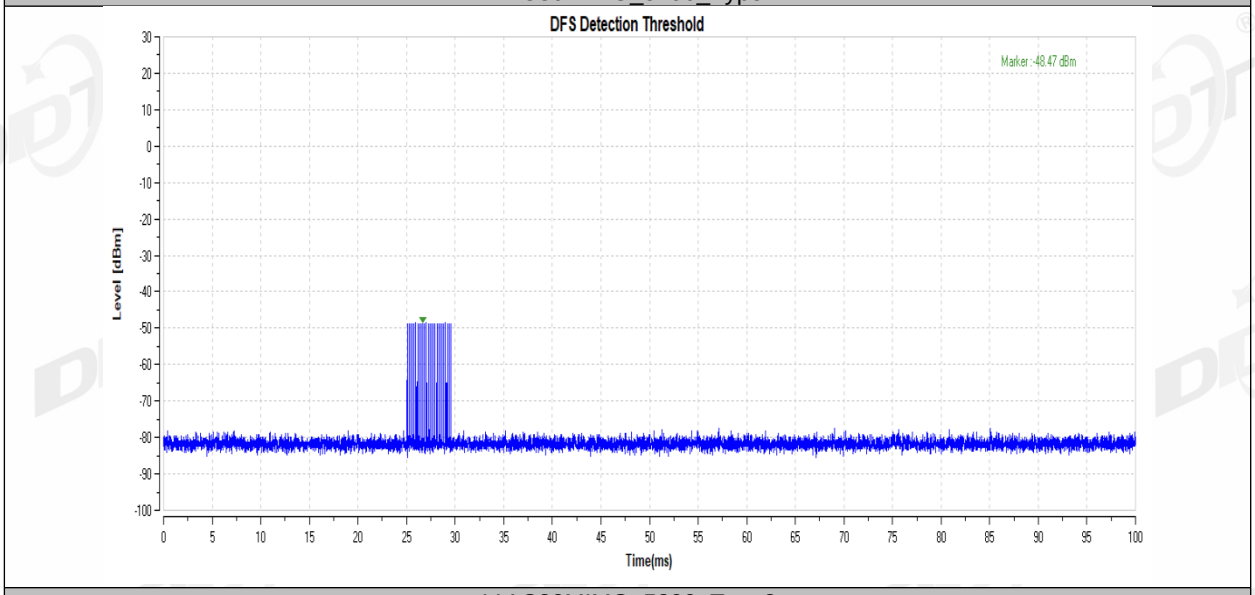

11AC80MIMO_5290_Type3

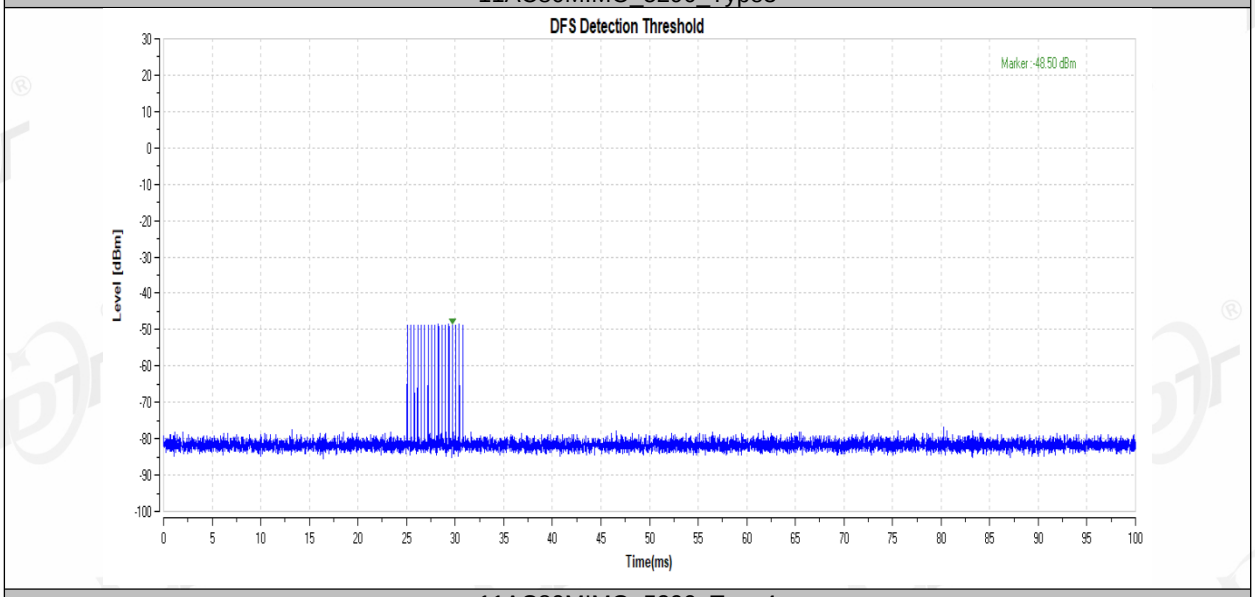

11AC80MIMO_5290_Type4

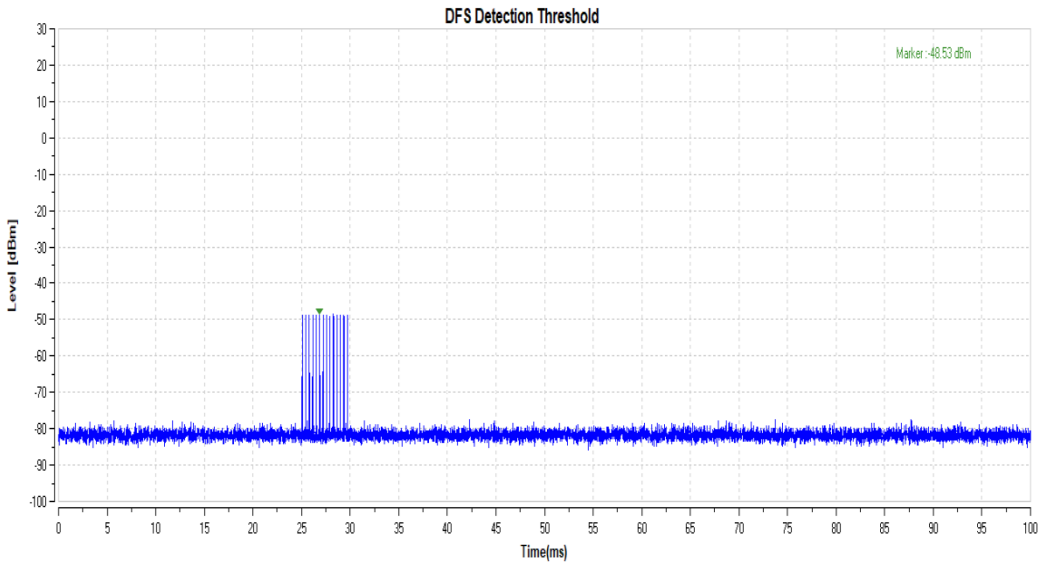

11AC80MIMO_5290_Type5

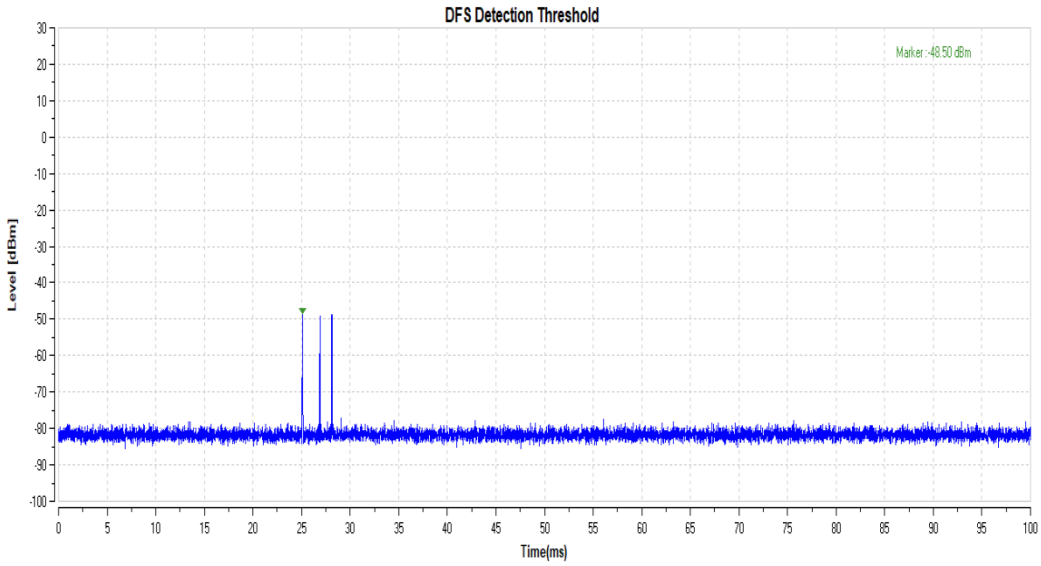

11AC80MIMO_5290_Type6

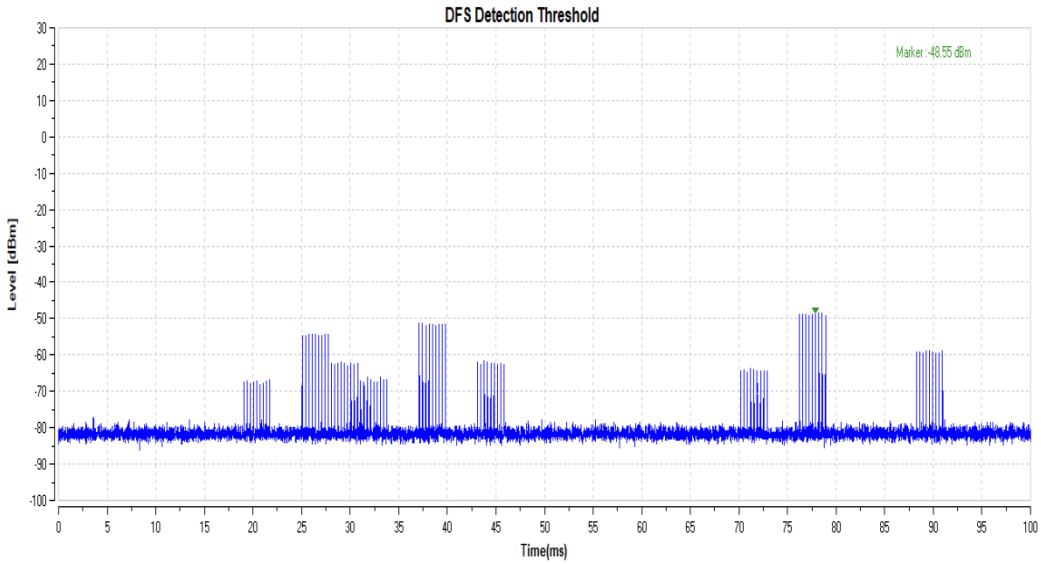

6. Channel Availability Check Time (CAC)

6.1. Channel Availability Check Limit

Channel Availability Check Limit
The UUT should not transmit any beacon or data transmissions until at least 1 minute after the completion of the power-on cycle.

6.2. Test Procedure

(1) Channel Availability Check Time (CAC)

(2) With link established on channel, apply a radar signal within 0~6 seconds after the initial power-up period; monitor the transmissions on channel from the spectrum analyzer.

(3) Reboot EUT, with a link established on channel, apply a radar signal within 54~60 seconds after the initial power-up period, and monitor the transmission on channel from the spectrum analyzer.

6.3. Test setup

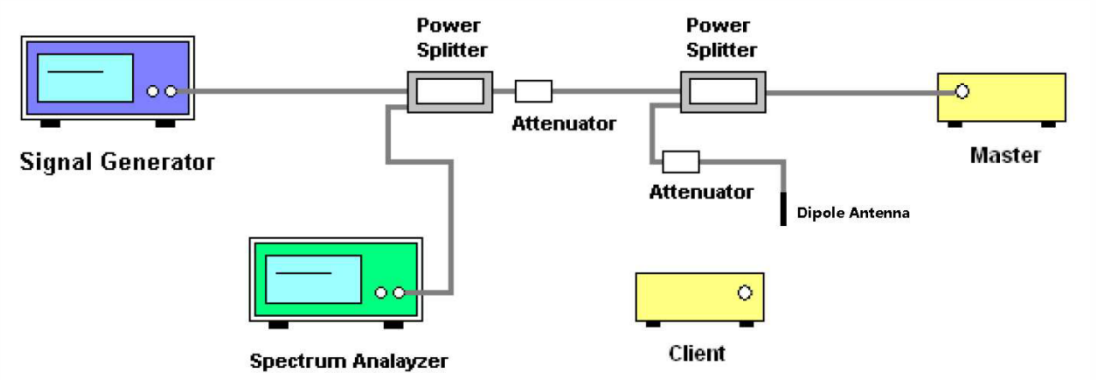

6.4. Test Result

Item	Result	Verdict
Initial Channel Availability Check Time	See test Graph	---
Beginning of Channel Availability Check Time	See test Graph	PASS
End of Channel Availability Check Time	See test Graph	PASS

6.5. Test Graphs

Initial Channel Availability Check Time
11AC80MIMO_5290

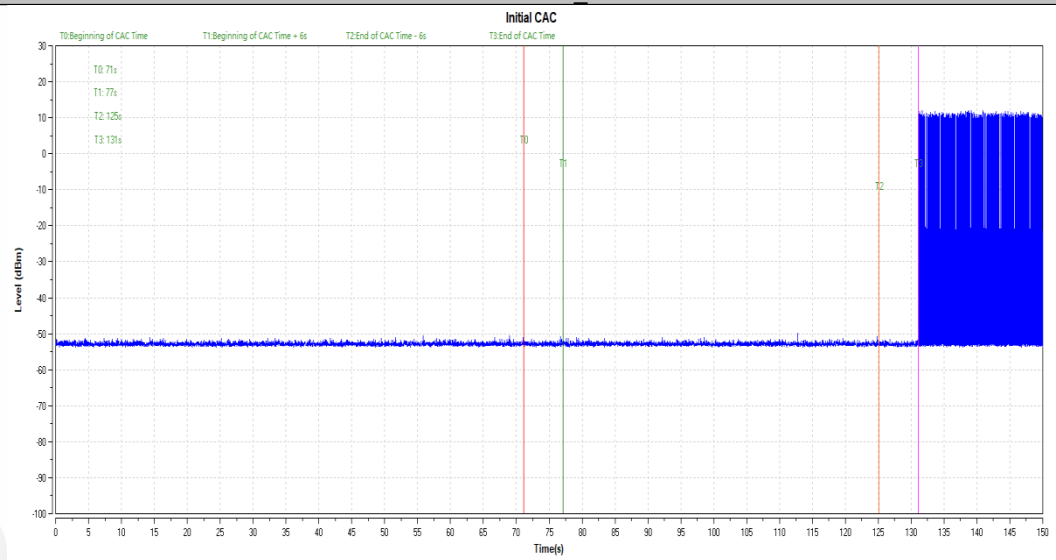

Beginning of Channel Availability Check Time
11AC80MIMO_5290

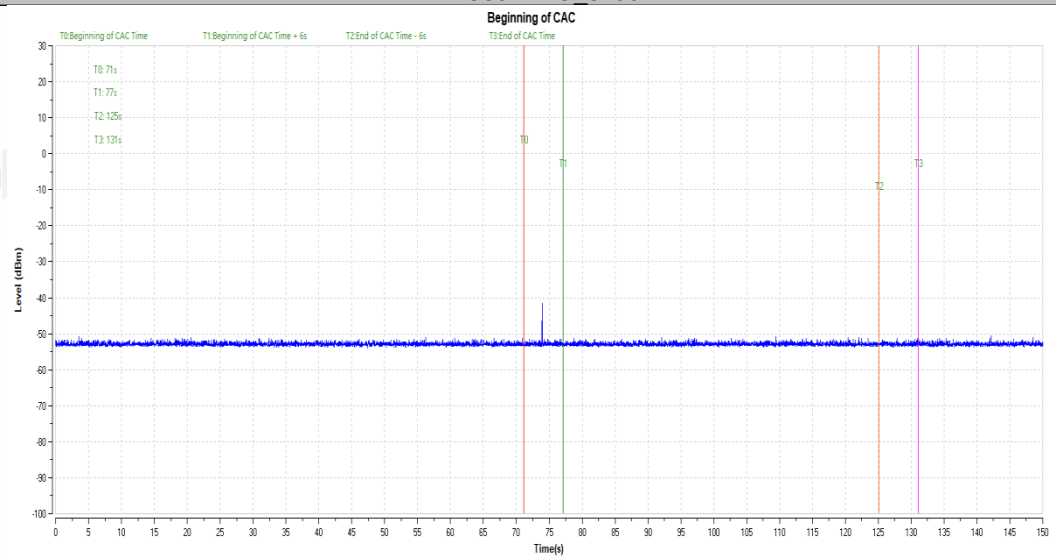

End of Channel Availability Check Time
11AC80MIMO_5290

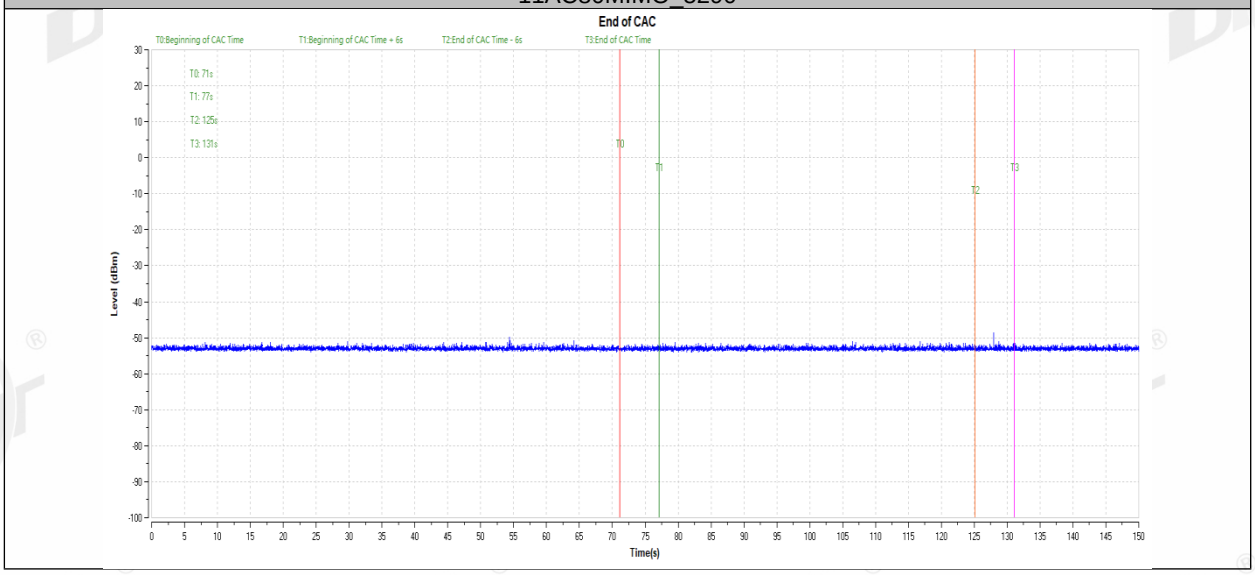

7. Channel Closing Transmission Time, Channel Move Time and Non-Occupancy Period

7.1. In-service Monitoring Limit

In-service Monitoring Limit	
Channel Move Time	10 sec
Channel Closing Transmission Time	200 ms + an aggregate of 60 ms over remaining 10 sec periods.
Non-Occupancy Period	Minimum 30 minutes

7.2. Test Procedure

(1) The radar pulse generator is setup to provide a pulse at frequency that the master and client are operating. A type 0 radar pulse with a 1us pulse width and a 1428us PRI is used for the testing.

(2) The vector signal generator is adjusted to provide the radar burst (18 pulses) at the level of approximately -61dBm at the antenna port of the master device.

(3) A trigger is provided from the pulse generator to the DFS monitoring system in order to capture the traffic and the occurrence of the radar pulse.

(4) Stream the channel loading test file from the Master Device to the Client Device on the test Channel

(5) for the entire period of the test. When radar burst with a level equal to the DFS Detection Threshold +1dB is generated on the operating channel of the U-NII device. At time T0 the radar waveform generator sends a burst of pulse of the radar waveform at Detection Threshold +1dB.

(6) Observe the transmissions of the EUT at the end of the radar Burst on the Operating Channel. Measure and record the transmissions from the UUT during the observation time (Channel Move Time). One 15 seconds plot is reported for the Short Pulse Radar Type 0. The plot for the Short Pulse Radar Types start at the end of the radar burst. The Channel Move Time will be calculated based on the zoom in 600ms plot of the Short Pulse Radar Type.

(7) Measurement of the aggregate duration of the Channel Closed Transmission Time method. With the spectrum analyzer set to zero span tuned to the center frequency of the EUT operating channel at the radar simulated frequency, peak detection, and max hold, the dwell time per bin is given by: Dwell (0.3ms) =S (12000ms) / B (4000); where Dwell is the dwell time per spectrum analyzer sampling bin, S is sweep time and B is the number of spectrum analyzer sampling bins. An upper bound of the aggregate duration of the intermittent control signals of Channel Closing Transmission Time is calculated by: C (ms)= N X Dwell (0.3ms); where C is the Closing Time, N is the number of spectrum analyzer sampling bins (intermittent control signals) showing a U-NII transmission and Dwell is the dwell time per bin.

Measurement the EUT for more than 30 minutes following the channel move time to verify that no

transmission or beacons occur on this channel.

7.3. Test setup

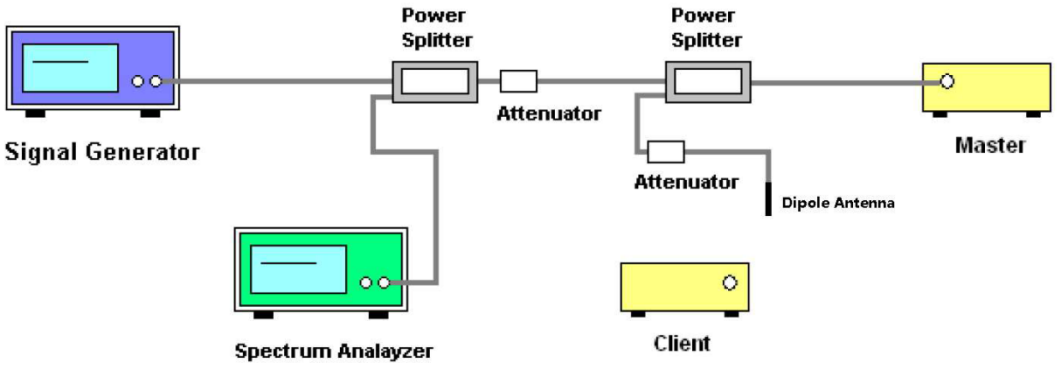

7.4. Test result

Channel Move Time and Channel Closing Transmission Time:

TestMode	Frequency[MHz]	CCTT[ms]	Limit[ms]	CMT[ms]	Limit[ms]	Verdict
11AC80MIMO	5290	200+13	200+60	832	10000	PASS

11AC80MIMO_5290

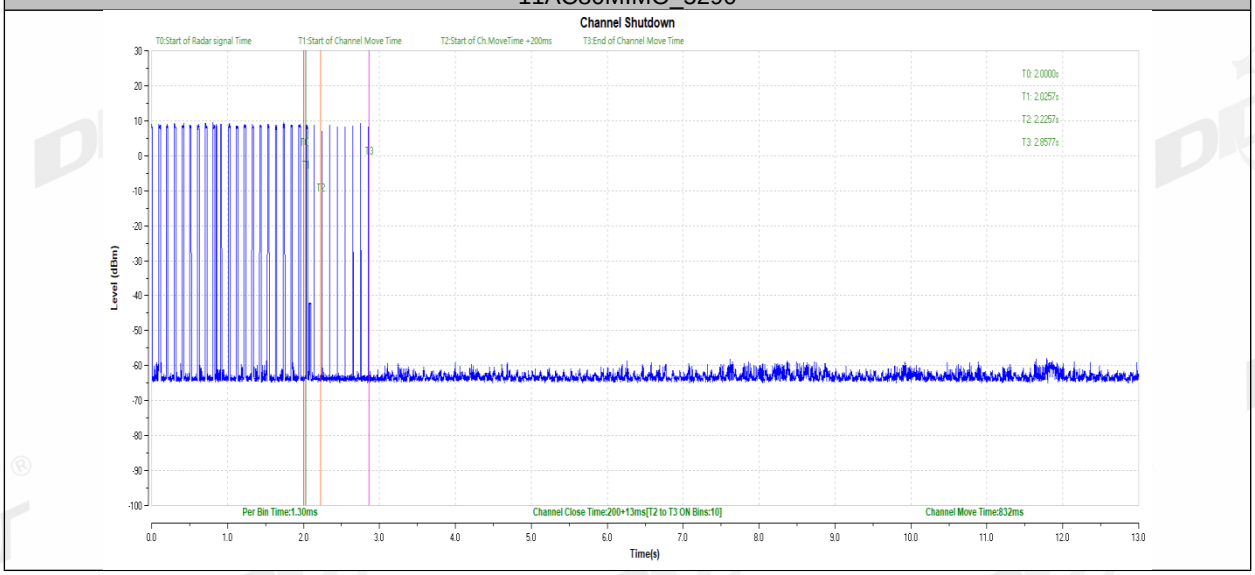

Non-Occupancy Period:

TestMode	Frequency[MHz]	Result	Limit[s]	Verdict
11AC80MIMO	5290	see test graph	≥1800	PASS

11AC80MIMO_5290

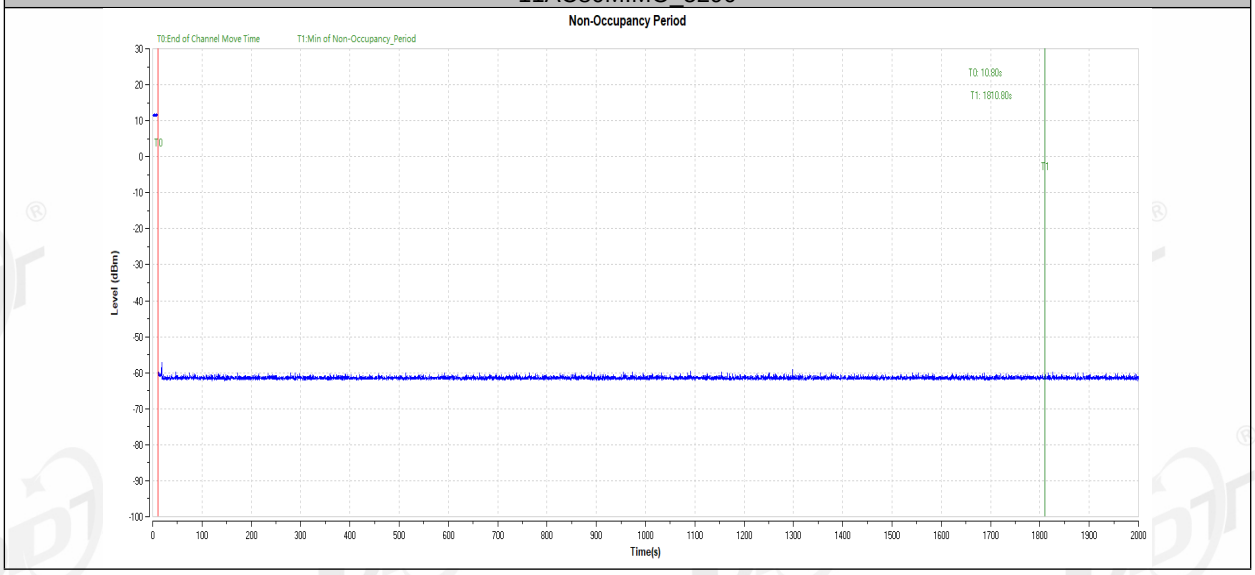

7.5. Detection Bandwidth

7.6. Detection Bandwidth Limit

Channel Bandwidth (MHz)	99% Occupied Bandwidth (MHz)	UNII Detection Bandwidth (MHz)
20	16.920	20
40	36.160	40
80	75.840	80
U-NII Detection Bandwidth is Minimum 100% of the U-NII 99% transmission power bandwidth. radar type 0 should be used. For each frequency step the minimum percentage of detection is 90 percent. Measurements are performed with no data traffic.		

7.7. Test Procedure

(1) Starting at the center frequency of the UUT operating Channel, increase the radar frequency in 5 MHz steps, repeating the above test sequence, until the detection rate falls below the U-NII Detection Bandwidth criterion specified in Table 4. Repeat this measurement in 1MHz steps at frequencies 5 MHz below where the detection rate begins to fall. Record the highest frequency (denote as F_H) at which detection is greater than or equal to the U-NII Detection Bandwidth criterion. Recording the detection rate at frequencies above FH is not required to demonstrate compliance. Starting at the center frequency of the UUT operating Channel, decrease the radar frequency in 5 MHz steps, repeating the above test sequence, until the detection rate falls below the U-NII Detection Bandwidth criterion specified in Table 4. Repeat this measurement in 1MHz steps at frequencies 5 MHz above where the detection rate begins to fall. Record the lowest frequency (denote as F_L) at which detection is greater than or equal to the U-NII Detection Bandwidth criterion. Recording the detection rate at frequencies below F_L is not required to demonstrate compliance.

(2) The U-NII Detection Bandwidth is calculated as follows: U-NII Detection Bandwidth = $F_H – F_L$

(3) The U-NII Detection Bandwidth must meet the U-NII Detection Bandwidth criterion specified in Table 4. Otherwise, the UUT does not comply with DFS requirements. This is essential to ensure that the UUT is capable of detecting Radar Waveforms across the same frequency spectrum that contains the significant energy from the system. In the case that the U-NII Detection Bandwidth is greater than or equal to the 99 percent power bandwidth for the measured F_H and F_L, the test can be truncated and the U-NII Detection Bandwidth can be reported as the measured F_H and F_L.

7.8. Test setup

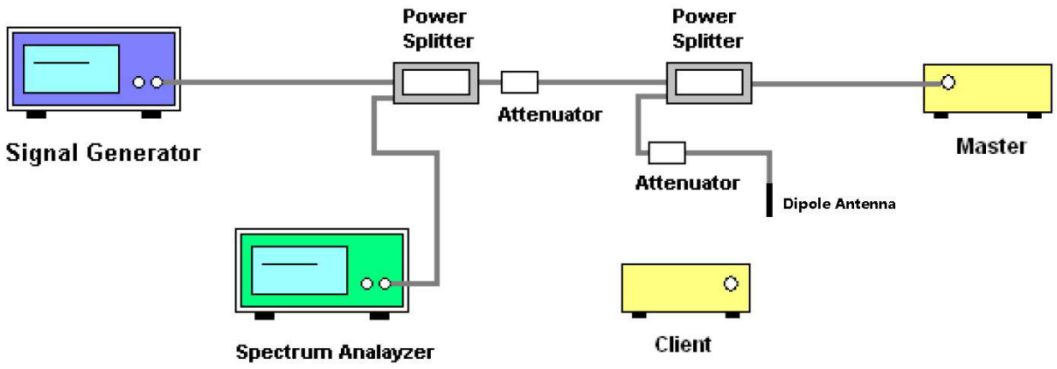

7.9. Test Result

TestMode	Frequency [MHz]	FL [MHz]	FH [MHz]	Detection Bandwidth [MHz]	OCB [MHz]	Ratio [%]	Limit [%]	Verdict
11A	5260	5250	5270	20	16.920	118.20	≥100	PASS
11AC40MIMO	5310	5290	5330	40	36.160	110.62	≥100	PASS
11AC80MIMO	5290	5250	5330	80	75.840	105.49	≥100	PASS

20MHz Bandwidth, EUT Frequency = 5260MHz											
DFS Detection Trials (1 = Detected, 0 = No Detected)											
Radar Frequency (MHz)	1	2	3	4	5	6	7	8	9	10	Detection Rate (%)
5250(F_L)	1	1	1	1	1	1	1	1	1	1	100
5255	1	1	1	1	1	1	1	1	1	1	100
5260	1	1	1	1	1	1	1	1	1	1	100
5265	1	1	1	1	1	1	1	1	1	1	100
5270(FH)	1	1	1	1	1	1	1	1	1	1	100
Detection Bandwidth = $F_H – F_L$ = 5270-5250 = 20 MHz											
EUT 99% BW = 16.920MHz;											Result: Pass

40MHz Bandwidth, EUT Frequency = 5310MHz											
DFS Detection Trials (1 = Detected, 0 = No Detected)											
Radar Frequency (MHz)	1	2	3	4	5	6	7	8	9	10	Detection Rate (%)
5290(F_L)	1	1	1	1	1	1	1	1	1	1	100
5295	1	1	1	1	1	1	1	1	1	1	100
5300	1	1	1	1	1	1	1	1	1	1	100
5305	1	1	1	1	1	1	1	1	1	1	100
5310	1	1	1	1	1	1	1	1	1	1	100
5315	1	1	1	1	1	1	1	1	1	1	100
5320	1	1	1	1	1	1	1	1	1	1	100
5325	1	1	1	1	1	1	1	1	1	1	100
5330(FH)	1	1	1	1	1	1	1	1	1	1	100
Detection Bandwidth = $F_H – F_L$ = 5330-5290 = 40 MHz											
EUT 99% BW = 36.160MHz;											Result: Pass

80MHz Bandwidth, EUT Frequency = 5290MHz											
DFS Detection Trials (1 = Detected, 0 = No Detected)											
Radar Frequency (MHz)	1	2	3	4	5	6	7	8	9	10	Detection Rate (%)
5250(F_L)	1	1	1	1	1	1	1	1	1	1	100
5255	1	1	1	1	1	1	1	1	1	1	100
5260	1	1	1	1	1	1	1	1	1	1	100
5265	1	1	1	1	1	1	1	1	1	1	100
5270	1	1	1	1	1	1	1	1	1	1	100
5275	1	1	1	1	1	1	1	1	1	1	100
5280	1	1	1	1	1	1	1	1	1	1	100
5285	1	1	1	1	1	1	1	1	1	1	100
5290	1	1	1	1	1	1	1	1	1	1	100
5295	1	1	1	1	1	1	1	1	1	1	100
5300	1	1	1	1	1	1	1	1	1	1	100
5305	1	1	1	1	1	1	1	1	1	1	100
5310	1	1	1	1	1	1	1	1	1	1	100
5315	1	1	1	1	1	1	1	1	1	1	100
5320	1	1	1	1	1	1	1	1	1	1	100
5325	1	1	1	1	1	1	1	1	1	1	100
5330(FH)	1	1	1	1	1	1	1	1	1	1	100
Detection Bandwidth = F_H – F_L = 5330-5250 = 80MHz											
EUT 99% BW = 75.840MHz;											Result: Pass

8. Statistical Performance Check

8.1. Statistical Performance Check Limit

Radar Type	Minimum Percentage of Successful Detection	Minimum Trials
1	60%	30
2	60%	30
3	60%	30
4	60%	30
Aggregate (Type1 to 4)	80%	120
5	80%	30
6	70%	30

$$\frac{TotalWaveformDetections}{TotalWaveformTrials} \times 100 = \text{Percentage of Successful Detection } Radar\ Waveform\ \text{N} = P_d\text{N}$$

In addition an aggregate minimum percentage of successful detection across all Short Pulse Radar Types 1-4 is required and is calculated as follows:

$$\frac{P_d 1 + P_d 2 + P_d 3 + P_d 4}{4}$$

8.2. Test Procedure

The steps below define the procedure to determine the minimum percentage of successful detection requirements found in Tables 5-7 when a radar burst with a level equal to the DFS Detection Threshold + 1dB is generated on the Operating Channel of the U-NII device (In- Service Monitoring).

a) One frequency will be chosen from the Operating Channels of the UUT within the 5250-5350 MHz or 5470-5725 MHz bands.

b) In case the UUT is a U-NII device operating as a Client Device (with or without Radar Detection), a U-NII device operating as a Master Device will be used to allow the UUT (Client device) to Associate with the Master Device. In case the UUT is a Master Device, a U-NII device operating as a Client Device will be used and it is assumed that the Client will Associate with the UUT (Master). In both cases for conducted tests, the Radar Waveform generator will be connected to the Master Device. For radiated tests, the emissions of the Radar Waveform generator will be directed towards the Master Device. If the Master Device has antenna gain, the main beam of the antenna will be directed toward the radar emitter. Vertical polarization is used for testing.

c) Stream the channel loading test file from the Master Device to the Client Device on the test Channel for the entire period of the test.

d) At time T0 the Radar Waveform generator sends the individual waveform for each of the Radar Types 1- 6 in Tables 5-7, at levels defined in Table 3, on the Operating Channel. An additional 1 dB is added to the radar test signal to ensure it is at or above the DFS Detection Threshold, accounting

for equipment variations/errors.

e) Observe the transmissions of the UUT at the end of the Burst on the Operating Channel for duration greater than 10 seconds for Radar Type 0 to ensure detection occurs.

f) Observe the transmissions of the UUT at the end of the Burst on the Operating Channel for duration greater than 22 seconds for Long Pulse Radar Type 5 to ensure detection occurs.

g) In case the UUT is a U-NII device operating as a Client Device with In-Service Monitoring, perform steps a) to f).

8.3. Test setup

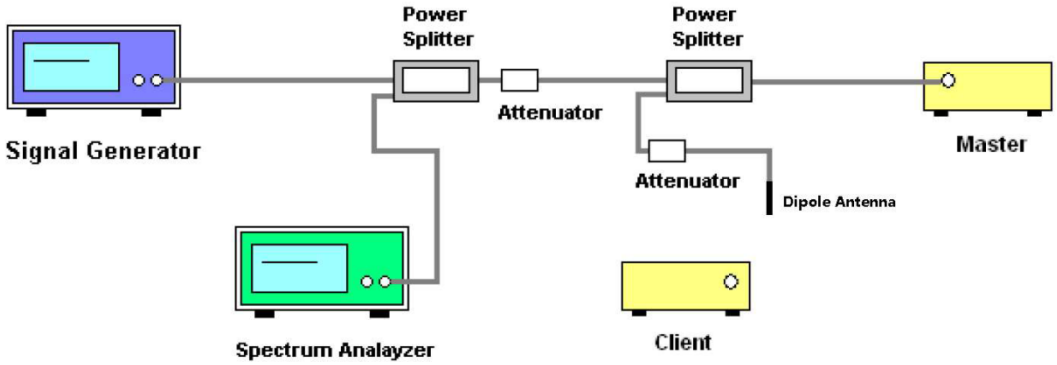

8.4. Test Result

Test Mode	Frequency[MHz]	Radar Type	Pass Times	Fail Times	Probability (%)	Limit (%)	Verdict
11A	5260	Type1	28	2	93.33	60	PASS
		Type2	28	2	93.33	60	PASS
		Type3	29	1	96.67	60	PASS
		Type4	29	1	96.67	60	PASS
		Type 1-4	---	---	95.00	80	PASS
		Type5	30	0	100.00	80	PASS
		Type6	29	1	96.67	70	PASS
11AC40MIMO	5310	Type1	29	1	96.67	60	PASS
		Type2	28	2	93.33	60	PASS
		Type3	30	0	100.00	60	PASS
		Type4	30	0	100.00	60	PASS
		Type 1-4	---	---	97.50	80	PASS
		Type5	30	0	100.00	80	PASS
		Type6	29	1	96.67	70	PASS
11AC80MIMO	5290	Type1	28	2	93.33	60	PASS
		Type2	30	0	100.00	60	PASS
		Type3	28	2	93.33	60	PASS
		Type4	29	1	96.67	60	PASS
		Type 1-4	---	---	95.83	80	PASS
		Type5	28	2	93.33	80	PASS
		Type6	30	0	100.00	70	PASS

TestMode	Frequency[MHz]	Radar Type	Trial ID	Pulse width(μs)	PRI(μs)	Pulses per Burst	Detection (1: Yes; 0: No)
11A	5260	Type1	0	1.0	938.0	57	1
		Type1	1	1.0	698.0	76	1
		Type1	2	1.0	618.0	86	1
		Type1	3	1.0	538.0	99	1
		Type1	4	1.0	878.0	61	1
		Type1	5	1.0	3066.0	18	1
		Type1	6	1.0	638.0	83	1
		Type1	7	1.0	918.0	58	1
		Type1	8	1.0	838.0	63	1
		Type1	9	1.0	858.0	62	1
		Type1	10	1.0	798.0	67	1
		Type1	11	1.0	718.0	74	1
		Type1	12	1.0	578.0	92	1
		Type1	13	1.0	598.0	89	1
		Type1	14	1.0	558.0	95	1
		Type1	15	1.0	2536.0	21	1
		Type1	16	1.0	966.0	55	1
		Type1	17	1.0	827.0	64	1
		Type1	18	1.0	2501.0	22	1
		Type1	19	1.0	2595.0	21	1
		Type1	20	1.0	1114.0	48	1
		Type1	21	1.0	1302.0	41	1
		Type1	22	1.0	3045.0	18	1
		Type1	23	1.0	1624.0	33	0
		Type1	24	1.0	2878.0	19	0
		Type1	25	1.0	1027.0	52	1
		Type1	26	1.0	2485.0	22	1
		Type1	27	1.0	1600.0	33	1
		Type1	28	1.0	1172.0	46	1
		Type1	29	1.0	1177.0	45	1
		Type2	0	3.2	179.0	26	1
		Type2	1	1.1	207.0	23	1
		Type2	2	2.1	230.0	24	1
		Type2	3	4.8	200.0	29	1
		Type2	4	3.9	214.0	28	1
		Type2	5	2.9	222.0	26	1
		Type2	6	3.2	204.0	26	1
		Type2	7	2.5	192.0	25	1
		Type2	8	3.1	164.0	26	1
		Type2	9	1.2	156.0	23	1
		Type2	10	3.9	210.0	27	1
		Type2	11	4.6	201.0	29	0
		Type2	12	3.2	162.0	26	1
		Type2	13	2.2	197.0	25	1
		Type2	14	4.5	163.0	29	1
		Type2	15	3.0	203.0	26	1
		Type2	16	5.0	168.0	29	1
		Type2	17	2.4	217.0	25	1
		Type2	18	2.9	191.0	26	0
		Type2	19	2.3	166.0	25	1
		Type2	20	3.7	150.0	27	1
		Type2	21	2.2	176.0	25	1
		Type2	22	4.9	195.0	29	1
		Type2	23	2.9	202.0	26	1
		Type2	24	2.5	178.0	25	1
		Type2	25	1.1	206.0	23	1
		Type2	26	3.8	155.0	27	1
		Type2	27	4.7	157.0	29	1
		Type2	28	2.4	224.0	25	1

		Type2	29	4.2	159.0	28	1
		Type3	0	8.2	355.0	17	1
		Type3	1	6.1	487.0	16	1
		Type3	2	7.1	344.0	16	1
		Type3	3	9.8	288.0	18	1
		Type3	4	8.9	230.0	18	1
		Type3	5	7.9	432.0	17	0
		Type3	6	8.2	207.0	17	1
		Type3	7	7.5	443.0	17	1
		Type3	8	8.1	439.0	17	1
		Type3	9	6.2	223.0	16	1
		Type3	10	8.9	208.0	18	1
		Type3	11	9.6	463.0	18	1
		Type3	12	8.2	441.0	17	1
		Type3	13	7.2	323.0	16	1
		Type3	14	9.5	297.0	18	1
		Type3	15	8.0	412.0	17	1
		Type3	16	10.0	324.0	18	1
		Type3	17	7.4	271.0	17	1
		Type3	18	7.9	349.0	17	1
		Type3	19	7.3	409.0	16	1
		Type3	20	8.7	373.0	18	1
		Type3	21	7.2	254.0	16	1
		Type3	22	9.9	274.0	18	1
		Type3	23	7.9	278.0	17	1
		Type3	24	7.5	317.0	17	1
		Type3	25	6.1	260.0	16	1
		Type3	26	8.8	211.0	18	1
		Type3	27	9.7	272.0	18	1
		Type3	28	7.4	264.0	17	1
		Type3	29	9.2	284.0	18	1
		Type4	0	16.0	355.0	14	1
		Type4	1	11.3	487.0	12	1
		Type4	2	13.5	344.0	13	1
		Type4	3	19.4	288.0	16	1
		Type4	4	17.5	230.0	15	1
		Type4	5	15.3	432.0	14	1
		Type4	6	15.9	207.0	14	1
		Type4	7	14.3	443.0	13	1
		Type4	8	15.8	439.0	14	1
		Type4	9	11.5	223.0	12	1
		Type4	10	17.4	208.0	15	1
		Type4	11	19.0	463.0	16	1
		Type4	12	16.0	441.0	14	1
		Type4	13	13.8	323.0	13	1
		Type4	14	18.9	297.0	16	1
		Type4	15	15.5	412.0	14	1
		Type4	16	19.9	324.0	16	1
		Type4	17	14.1	271.0	13	1
		Type4	18	15.2	349.0	14	1
		Type4	19	13.8	409.0	13	1
		Type4	20	17.1	373.0	15	1
		Type4	21	13.8	254.0	13	1
		Type4	22	19.8	274.0	16	1
		Type4	23	15.3	278.0	14	1
		Type4	24	14.5	317.0	13	1
		Type4	25	11.3	260.0	12	1
		Type4	26	17.3	211.0	15	1
		Type4	27	19.2	272.0	16	1
		Type4	28	14.2	264.0	13	0
		Type4	29	18.2	284.0	15	1
11AC40MIMO	5310	Type1	0	1.0	938.0	57	1
		Type1	1	1.0	698.0	76	1
		Type1	2	1.0	618.0	86	1

		Type1	3	1.0	538.0	99	1
		Type1	4	1.0	878.0	61	1
		Type1	5	1.0	3066.0	18	1
		Type1	6	1.0	638.0	83	1
		Type1	7	1.0	918.0	58	1
		Type1	8	1.0	838.0	63	1
		Type1	9	1.0	858.0	62	0
		Type1	10	1.0	798.0	67	1
		Type1	11	1.0	718.0	74	1
		Type1	12	1.0	578.0	92	1
		Type1	13	1.0	598.0	89	1
		Type1	14	1.0	558.0	95	1
		Type1	15	1.0	2536.0	21	1
		Type1	16	1.0	966.0	55	1
		Type1	17	1.0	827.0	64	1
		Type1	18	1.0	2501.0	22	1
		Type1	19	1.0	2595.0	21	1
		Type1	20	1.0	1114.0	48	1
		Type1	21	1.0	1302.0	41	1
		Type1	22	1.0	3045.0	18	1
		Type1	23	1.0	1624.0	33	1
		Type1	24	1.0	2878.0	19	1
		Type1	25	1.0	1027.0	52	1
		Type1	26	1.0	2485.0	22	1
		Type1	27	1.0	1600.0	33	1
		Type1	28	1.0	1172.0	46	1
		Type1	29	1.0	1177.0	45	1
		Type2	0	3.2	179.0	26	1
		Type2	1	1.1	207.0	23	1
		Type2	2	2.1	230.0	24	1
		Type2	3	4.8	200.0	29	1
		Type2	4	3.9	214.0	28	1
		Type2	5	2.9	222.0	26	1
		Type2	6	3.2	204.0	26	1
		Type2	7	2.5	192.0	25	1
		Type2	8	3.1	164.0	26	1
		Type2	9	1.2	156.0	23	1
		Type2	10	3.9	210.0	27	0
		Type2	11	4.6	201.0	29	1
		Type2	12	3.2	162.0	26	1
		Type2	13	2.2	197.0	25	1
		Type2	14	4.5	163.0	29	1
		Type2	15	3.0	203.0	26	1
		Type2	16	5.0	168.0	29	1
		Type2	17	2.4	217.0	25	1
		Type2	18	2.9	191.0	26	1
		Type2	19	2.3	166.0	25	1
		Type2	20	3.7	150.0	27	1
		Type2	21	2.2	176.0	25	0
		Type2	22	4.9	195.0	29	1
		Type2	23	2.9	202.0	26	1
		Type2	24	2.5	178.0	25	1
		Type2	25	1.1	206.0	23	1
		Type2	26	3.8	155.0	27	1
		Type2	27	4.7	157.0	29	1
		Type2	28	2.4	224.0	25	1
		Type2	29	4.2	159.0	28	1
		Type3	0	8.2	355.0	17	1
		Type3	1	6.1	487.0	16	1
		Type3	2	7.1	344.0	16	1
		Type3	3	9.8	288.0	18	1
		Type3	4	8.9	230.0	18	1
		Type3	5	7.9	432.0	17	1
		Type3	6	8.2	207.0	17	1

		Type3	7	7.5	443.0	17	1
		Type3	8	8.1	439.0	17	1
		Type3	9	6.2	223.0	16	1
		Type3	10	8.9	208.0	18	1
		Type3	11	9.6	463.0	18	1
		Type3	12	8.2	441.0	17	1
		Type3	13	7.2	323.0	16	1
		Type3	14	9.5	297.0	18	1
		Type3	15	8.0	412.0	17	1
		Type3	16	10.0	324.0	18	1
		Type3	17	7.4	271.0	17	1
		Type3	18	7.9	349.0	17	1
		Type3	19	7.3	409.0	16	1
		Type3	20	8.7	373.0	18	1
		Type3	21	7.2	254.0	16	1
		Type3	22	9.9	274.0	18	1
		Type3	23	7.9	278.0	17	1
		Type3	24	7.5	317.0	17	1
		Type3	25	6.1	260.0	16	1
		Type3	26	8.8	211.0	18	1
		Type3	27	9.7	272.0	18	1
		Type3	28	7.4	264.0	17	1
		Type3	29	9.2	284.0	18	1
		Type4	0	16.0	355.0	14	1
		Type4	1	11.3	487.0	12	1
		Type4	2	13.5	344.0	13	1
		Type4	3	19.4	288.0	16	1
		Type4	4	17.5	230.0	15	1
		Type4	5	15.3	432.0	14	1
		Type4	6	15.9	207.0	14	1
		Type4	7	14.3	443.0	13	1
		Type4	8	15.8	439.0	14	1
		Type4	9	11.5	223.0	12	1
		Type4	10	17.4	208.0	15	1
		Type4	11	19.0	463.0	16	1
		Type4	12	16.0	441.0	14	1
		Type4	13	13.8	323.0	13	1
		Type4	14	18.9	297.0	16	1
		Type4	15	15.5	412.0	14	1
		Type4	16	19.9	324.0	16	1
		Type4	17	14.1	271.0	13	1
		Type4	18	15.2	349.0	14	1
		Type4	19	13.8	409.0	13	1
		Type4	20	17.1	373.0	15	1
		Type4	21	13.8	254.0	13	1
		Type4	22	19.8	274.0	16	1
		Type4	23	15.3	278.0	14	1
		Type4	24	14.5	317.0	13	1
		Type4	25	11.3	260.0	12	1
		Type4	26	17.3	211.0	15	1
		Type4	27	19.2	272.0	16	1
		Type4	28	14.2	264.0	13	1
		Type4	29	18.2	284.0	15	1
11AC80MIMO	5290	Type1	0	1.0	938.0	57	1
		Type1	1	1.0	698.0	76	1
		Type1	2	1.0	618.0	86	1
		Type1	3	1.0	538.0	99	1
		Type1	4	1.0	878.0	61	1
		Type1	5	1.0	3066.0	18	0
		Type1	6	1.0	638.0	83	1
		Type1	7	1.0	918.0	58	1
		Type1	8	1.0	838.0	63	1
		Type1	9	1.0	858.0	62	1
		Type1	10	1.0	798.0	67	1

		Type1	11	1.0	718.0	74	1
		Type1	12	1.0	578.0	92	1
		Type1	13	1.0	598.0	89	1
		Type1	14	1.0	558.0	95	1
		Type1	15	1.0	2536.0	21	1
		Type1	16	1.0	966.0	55	1
		Type1	17	1.0	827.0	64	1
		Type1	18	1.0	2501.0	22	1
		Type1	19	1.0	2595.0	21	1
		Type1	20	1.0	1114.0	48	1
		Type1	21	1.0	1302.0	41	1
		Type1	22	1.0	3045.0	18	1
		Type1	23	1.0	1624.0	33	1
		Type1	24	1.0	2878.0	19	1
		Type1	25	1.0	1027.0	52	1
		Type1	26	1.0	2485.0	22	1
		Type1	27	1.0	1600.0	33	0
		Type1	28	1.0	1172.0	46	1
		Type1	29	1.0	1177.0	45	1
		Type2	0	3.2	179.0	26	1
		Type2	1	1.1	207.0	23	1
		Type2	2	2.1	230.0	24	1
		Type2	3	4.8	200.0	29	1
		Type2	4	3.9	214.0	28	1
		Type2	5	2.9	222.0	26	1
		Type2	6	3.2	204.0	26	1
		Type2	7	2.5	192.0	25	1
		Type2	8	3.1	164.0	26	1
		Type2	9	1.2	156.0	23	1
		Type2	10	3.9	210.0	27	1
		Type2	11	4.6	201.0	29	1
		Type2	12	3.2	162.0	26	1
		Type2	13	2.2	197.0	25	1
		Type2	14	4.5	163.0	29	1
		Type2	15	3.0	203.0	26	1
		Type2	16	5.0	168.0	29	1
		Type2	17	2.4	217.0	25	1
		Type2	18	2.9	191.0	26	1
		Type2	19	2.3	166.0	25	1
		Type2	20	3.7	150.0	27	1
		Type2	21	2.2	176.0	25	1
		Type2	22	4.9	195.0	29	1
		Type2	23	2.9	202.0	26	1
		Type2	24	2.5	178.0	25	1
		Type2	25	1.1	206.0	23	1
		Type2	26	3.8	155.0	27	1
		Type2	27	4.7	157.0	29	1
		Type2	28	2.4	224.0	25	1
		Type2	29	4.2	159.0	28	1
		Type3	0	8.2	355.0	17	1
		Type3	1	6.1	487.0	16	1
		Type3	2	7.1	344.0	16	1
		Type3	3	9.8	288.0	18	1
		Type3	4	8.9	230.0	18	1
		Type3	5	7.9	432.0	17	1
		Type3	6	8.2	207.0	17	0
		Type3	7	7.5	443.0	17	1
		Type3	8	8.1	439.0	17	1
		Type3	9	6.2	223.0	16	1
		Type3	10	8.9	208.0	18	1
		Type3	11	9.6	463.0	18	1
		Type3	12	8.2	441.0	17	1
		Type3	13	7.2	323.0	16	1
		Type3	14	9.5	297.0	18	1

		Type3	15	8.0	412.0	17	1
		Type3	16	10.0	324.0	18	1
		Type3	17	7.4	271.0	17	1
		Type3	18	7.9	349.0	17	1
		Type3	19	7.3	409.0	16	1
		Type3	20	8.7	373.0	18	1
		Type3	21	7.2	254.0	16	1
		Type3	22	9.9	274.0	18	1
		Type3	23	7.9	278.0	17	1
		Type3	24	7.5	317.0	17	1
		Type3	25	6.1	260.0	16	1
		Type3	26	8.8	211.0	18	1
		Type3	27	9.7	272.0	18	1
		Type3	28	7.4	264.0	17	0
		Type3	29	9.2	284.0	18	1
		Type4	0	16.0	355.0	14	1
		Type4	1	11.3	487.0	12	1
		Type4	2	13.5	344.0	13	1
		Type4	3	19.4	288.0	16	1
		Type4	4	17.5	230.0	15	1
		Type4	5	15.3	432.0	14	1
		Type4	6	15.9	207.0	14	1
		Type4	7	14.3	443.0	13	1
		Type4	8	15.8	439.0	14	1
		Type4	9	11.5	223.0	12	1
		Type4	10	17.4	208.0	15	1
		Type4	11	19.0	463.0	16	1
		Type4	12	16.0	441.0	14	0
		Type4	13	13.8	323.0	13	1
		Type4	14	18.9	297.0	16	1
		Type4	15	15.5	412.0	14	1
		Type4	16	19.9	324.0	16	1
		Type4	17	14.1	271.0	13	1
		Type4	18	15.2	349.0	14	1
		Type4	19	13.8	409.0	13	1
		Type4	20	17.1	373.0	15	1
		Type4	21	13.8	254.0	13	1
		Type4	22	19.8	274.0	16	1
		Type4	23	15.3	278.0	14	1
		Type4	24	14.5	317.0	13	1
		Type4	25	11.3	260.0	12	1
		Type4	26	17.3	211.0	15	1
		Type4	27	19.2	272.0	16	1
		Type4	28	14.2	264.0	13	1
		Type4	29	18.2	284.0	15	1

TestMode	Frequency[MHz]	Radar Type	Trial ID	Number Of Bursts	Wavform Length (s))	Radar Frequency	Detection (1: Yes; 0: No)
11A	5260	Type5	0	15	12	5260	1
		Type5	1	8	12	5260	1
		Type5	2	11	12	5260	1
		Type5	3	20	12	5260	1
		Type5	4	17	12	5260	1
		Type5	5	14	12	5260	1
		Type5	6	15	12	5260	1
		Type5	7	12	12	5260	1
		Type5	8	14	12	5260	1
		Type5	9	8	12	5260	1
		Type5	10	17	12	5256	1
		Type5	11	19	12	5258	1
		Type5	12	15	12	5255	1
		Type5	13	12	12	5254	1
		Type5	14	19	12	5257	1
		Type5	15	14	12	5255	1
		Type5	16	20	12	5258	1
		Type5	17	12	12	5254	1
		Type5	18	14	12	5255	1
		Type5	19	12	12	5254	1
		Type5	20	16	12	5264	1
		Type5	21	12	12	5266	1
		Type5	22	20	12	5262	1
		Type5	23	14	12	5265	1
		Type5	24	13	12	5266	1
		Type5	25	8	12	5268	1
		Type5	26	17	12	5264	1
		Type5	27	19	12	5262	1
		Type5	28	12	12	5266	1
		Type5	29	18	12	5263	1
11AC40MIMO	5310	Type5	0	15	12	5310	1
		Type5	1	8	12	5310	1
		Type5	2	11	12	5310	1
		Type5	3	20	12	5310	1
		Type5	4	17	12	5310	1
		Type5	5	14	12	5310	1
		Type5	6	15	12	5310	1
		Type5	7	12	12	5310	1
		Type5	8	14	12	5310	1
		Type5	9	8	12	5310	1
		Type5	10	17	12	5298	1
		Type5	11	19	12	5299	1
		Type5	12	15	12	5297	1
		Type5	13	12	12	5296	1
		Type5	14	19	12	5299	1
		Type5	15	14	12	5297	1
		Type5	16	20	12	5300	1
		Type5	17	12	12	5296	1
		Type5	18	14	12	5297	1
		Type5	19	12	12	5296	1
		Type5	20	16	12	5322	1
		Type5	21	12	12	5325	1
		Type5	22	20	12	5320	1
		Type5	23	14	12	5323	1
		Type5	24	13	12	5324	1
		Type5	25	8	12	5326	1
		Type5	26	17	12	5322	1
		Type5	27	19	12	5321	1
		Type5	28	12	12	5324	1

		Type5	29	18	12	5321	1
11AC80MIMO	5290	Type5	0	15	12	5290	1
		Type5	1	8	12	5290	1
		Type5	2	11	12	5290	1
		Type5	3	20	12	5290	1
		Type5	4	17	12	5290	1
		Type5	5	14	12	5290	1
		Type5	6	15	12	5290	1
		Type5	7	12	12	5290	1
		Type5	8	14	12	5290	1
		Type5	9	8	12	5290	1
		Type5	10	17	12	5258	0
		Type5	11	19	12	5260	1
		Type5	12	15	12	5257	1
		Type5	13	12	12	5256	1
		Type5	14	19	12	5259	1
		Type5	15	14	12	5257	1
		Type5	16	20	12	5260	1
		Type5	17	12	12	5256	1
		Type5	18	14	12	5257	1
		Type5	19	12	12	5256	1
		Type5	20	16	12	5322	1
		Type5	21	12	12	5324	1
		Type5	22	20	12	5320	1
		Type5	23	14	12	5323	1
		Type5	24	13	12	5324	0
		Type5	25	8	12	5326	1
		Type5	26	17	12	5322	1
		Type5	27	19	12	5320	1
		Type5	28	12	12	5324	1
		Type5	29	18	12	5321	1

11A-5260MHz:
Radar Type 5 Case1 Statistical Performance

Statistics 0 (ChirpCenter Frequency: 5260 MHz)

Trial #	Burst Offset (us)	Pulse Width (µS)	Chirp (MHz)	Number of Pulses per Burst	PRI-1 (µS)	PRI-2 (µS)	PRI-3 (µS)	Detection (1:yes;0:no)
0	636185.0	77.8	13	2	1665.0	1477.0	-	1
1	32674.0	51.9	13	1	1074.0	-	-	
2	226294.0	63.8	13	1	1584.0	-	-	
3	417976.0	96.6	13	3	1682.0	1786.0	1843.0	
4	611152.0	85.9	13	3	1795.0	1215.0	1729.0	
5	8789.0	73.7	13	2	1198.0	1549.0	-	
6	201917.0	77.2	13	2	1837.0	1819.0	-	
7	395530.0	68.4	13	2	1587.0	1114.0	-	
8	588564.0	76.7	13	2	2000.0	1155.0	-	
9	783794.0	53.2	13	1	1147.0	-	-	
10	177933.0	85.7	13	3	1433.0	1695.0	1394.0	
11	370624.0	94.3	13	3	1670.0	1426.0	1935.0	
12	564893.0	77.6	13	2	1294.0	1671.0	-	
13	759583.0	65.7	13	1	1512.0	-	-	
14	154262.0	93.5	13	3	1444.0	1130.0	1468.0	

Statistics 1 (ChirpCenter Frequency: 5260 MHz)

Trial #	Burst Offset (us)	Pulse Width (µS)	Chirp (MHz)	Number of Pulses per Burst	PRI-1 (µS)	PRI-2 (µS)	PRI-3 (µS)	Detection (1:yes;0:no)
0	653020.0	75.0	5	2	1880.0	1527.0	-	1
1	1015643.0	99.4	5	3	1401.0	1262.0	1257.0	
2	1379398.0	67.4	5	2	1531.0	1403.0	-	
3	245489.0	73.6	5	2	1449.0	1041.0	-	
4	609113.0	65.9	5	1	1432.0	-	-	
5	970852.0	83.8	5	3	1356.0	1292.0	1419.0	
6	1335913.0	65.5	5	1	1543.0	-	-	
7	200406.0	98.6	5	3	1548.0	1796.0	1728.0	

Statistics 2 (ChirpCenter Frequency: 5260 MHz)

Trial #	Burst Offset (us)	Pulse Width (µS)	Chirp (MHz)	Number of Pulses per Burst	PRI-1 (µS)	PRI-2 (µS)	PRI-3 (µS)	Detection (1:yes;0:no)
0	409565.0	73.8	9	2	1806.0	1538.0	-	1
1	673692.0	69.5	9	2	1117.0	1649.0	-	
2	938562.0	51.9	9	1	1651.0	-	-	
3	113209.0	84.6	9	3	1976.0	1032.0	1271.0	
4	376726.0	95.4	9	3	1060.0	1903.0	1388.0	
5	641212.0	68.0	9	2	1368.0	1351.0	-	
6	903714.0	89.6	9	3	1338.0	1514.0	1573.0	
7	80863.0	81.9	9	2	1022.0	1689.0	-	
8	344067.0	88.3	9	3	1810.0	1330.0	1838.0	
9	609331.0	53.7	9	1	1597.0	-	-	
10	871542.0	91.3	9	3	1961.0	1106.0	1001.0	

Statistics 3 (ChirpCenter Frequency: 5260 MHz)

Trial #	Burst Offset (us)	Pulse Width (µS)	Chirp (MHz)	Number of Pulses per Burst	PRI-1 (µS)	PRI-2 (µS)	PRI-3 (µS)	Detection (1:yes;0:no)
0	26541.0	68.1	19	2	1339.0	1355.0	-	1
1	171821.0	58.7	19	1	1251.0	-	-	
2	316229.0	75.3	19	2	1136.0	1640.0	-	
3	461864.0	56.4	19	1	1753.0	-	-	
4	8677.0	99.7	19	3	1196.0	1708.0	1159.0	
5	153995.0	57.7	19	1	1013.0	-	-	
6	299238.0	59.5	19	1	1072.0	-	-	
7	443177.0	80.0	19	2	1482.0	1369.0	-	
8	587671.0	82.0	19	2	1993.0	1197.0	-	
9	135674.0	82.8	19	2	1883.0	1005.0	-	
10	279928.0	88.0	19	3	1061.0	1928.0	1101.0	
11	424279.0	93.2	19	3	1207.0	1907.0	1223.0	
12	570132.0	70.4	19	2	1526.0	1360.0	-	
13 14	117439.0	95.3	19	3	1171.0	1955.0	1775.0	
15	262502.0	81.9	19	2	1690.0	1545.0	-	
16	406573.0	98.5	19	3	1975.0	1169.0	1062.0	
17	553328.0	65.0	19	1	1767.0	-	-	
18	99799.0	85.4	19	3	1011.0	1637.0	1425.0	
19	244095.0	91.6	19	3	1878.0	1445.0	1325.0	

Statistics 4 (ChirpCenter Frequency: 5260 MHz)

Trial #	Burst Offset (us)	Pulse Width (µS)	Chirp (MHz)	Number of Pulses per Burst	PRI-1 (µS)	PRI-2 (µS)	PRI-3 (µS)	Detection (1:yes;0:no)
0	629614.0	67.9	16	2	1320.0	1133.0	-	1
1	96856.0	62.3	16	1	1957.0	-	-	
2	267719.0	53.3	16	1	1592.0	-	-	
3	436784.0	90.0	16	3	1900.0	1153.0	1346.0	
4	608289.0	77.1	16	2	1166.0	1646.0	-	
5	75610.0	83.9	16	3	1278.0	1232.0	1459.0	
6	245638.0	89.1	16	3	1240.0	1384.0	1939.0	
7	416355.0	81.8	16	2	1833.0	1676.0	-	
8	588736.0	50.3	16	1	1075.0	-	-	
9	54571.0	87.1	16	3	1116.0	1996.0	1756.0	
10	225175.0	71.3	16	2	1225.0	1815.0	-	
11	394825.0	97.5	16	3	1884.0	1465.0	1132.0	
12	565361.0	90.6	16	3	1561.0	1040.0	1354.0	
13	33643.0	86.3	16	3	1596.0	1183.0	1792.0	
14	203957.0	97.6	16	3	1365.0	1073.0	1361.0	
15	373812.0	84.7	16	3	1021.0	1718.0	1854.0	
16	544060.0	99.7	16	3	1150.0	1244.0	1988.0	

Statistics 5 (ChirpCenter Frequency: 5260 MHz)

Trial #	Burst Offset (us)	Pulse Width (µS)	Chirp (MHz)	Number of Pulses per Burst	PRI-1 (µS)	PRI-2 (µS)	PRI-3 (µS)	Detection (1:yes;0:no)
0	15438.0	92.9	12	3	1085.0	1564.0	1407.0	1
1	222486.0	67.7	12	2	1744.0	1747.0	-	
2	430731.0	65.8	12	1	1092.0	-	-	
3	637784.0	56.3	12	1	1851.0	-	-	
4	845342.0	53.7	12	1	1727.0	-	-	

5	196720.0	83.5	12	3	1679.0	1930.0	1025.0	
6	404955.0	65.8	12	1	1519.0	-	-	
7	610711.0	85.9	12	3	1134.0	1034.0	1808.0	
8	818057.0	76.3	12	2	1606.0	1926.0	-	
9	171459.0	81.5	12	2	1891.0	1714.0	-	
10	377969.0	89.4	12	3	1310.0	1594.0	1827.0	
11	586875.0	63.4	12	1	1568.0	-	-	
12	792834.0	69.6	12	2	1307.0	1925.0	-	
13	146044.0	74.5	12	2	1264.0	1846.0	-	

Statistics 6 (ChirpCenter Frequency: 5260 MHz)

Trial #	Burst Offset (us)	Pulse Width (µS)	Chirp (MHz)	Number of Pulses per Burst	PRI-1 (µS)	PRI-2 (µS)	PRI-3 (µS)	Detection (1:yes;0:no)
0	329022.0	96.6	13	3	1182.0	1609.0	1581.0	1
1	521718.0	96.7	13	3	1829.0	1799.0	1154.0	
2	714222.0	86.5	13	3	1923.0	1396.0	1865.0	
3	112450.0	73.3	13	2	1908.0	1318.0	-	
4	306283.0	55.8	13	1	1688.0	-	-	
5	500239.0	55.4	13	1	1145.0	-	-	
6	690932.0	85.3	13	3	1336.0	1504.0	1820.0	
7	88645.0	79.4	13	2	1344.0	1893.0	-	
8	282508.0	65.7	13	1	1476.0	-	-	
9	475842.0	68.6	13	2	1008.0	1028.0	-	
10	667887.0	77.7	13	2	1972.0	1835.0	-	
11	64845.0	79.6	13	2	1882.0	1331.0	-	
12	257755.0	94.9	13	3	1830.0	1070.0	1349.0	
13	452335.0	61.4	13	1	1451.0	-	-	
14	643395.0	90.6	13	3	1233.0	1562.0	1887.0	
15	329022.0	96.6	13	3	1182.0	1609.0	1581.0	

Statistics 7 (ChirpCenter Frequency: 5260 MHz)

Trial #	Burst Offset (us)	Pulse Width (µS)	Chirp (MHz)	Number of Pulses per Burst	PRI-1 (µS)	PRI-2 (µS)	PRI-3 (µS)	Detection (1:yes;0:no)
0	51446.0	52.6	10	1	1210.0	-	-	1
1	292696.0	84.1	10	3	1314.0	1725.0	1529.0	
2	533989.0	97.7	10	3	1139.0	1868.0	1805.0	
3	775564.0	97.3	10	3	1341.0	1446.0	1755.0	
4	21542.0	98.8	10	3	1544.0	1386.0	1302.0	
5	263385.0	72.2	10	2	1771.0	1184.0	-	
6	505581.0	67.6	10	2	1175.0	1027.0	-	
7	747058.0	75.7	10	2	1026.0	1871.0	-	
8	989976.0	60.9	10	1	1798.0	-	-	
9	234024.0	64.2	10	1	1138.0	-	-	
10	475207.0	78.8	10	2	1784.0	1604.0	-	
11	715825.0	87.5	10	3	1511.0	1712.0	1683.0	

Statistics 8 (ChirpCenter Frequency: 5260 MHz)

Trial #	Burst Offset (us)	Pulse Width (µS)	Chirp (MHz)	Number of Pulses per Burst	PRI-1 (µS)	PRI-2 (µS)	PRI-3 (µS)	Detection (1:yes;0:no)
0	823112.0	54.1	13	1	1415.0	-	-	1
1	174965.0	50.7	13	1	1221.0	-	-	
2	382216.0	52.3	13	1	1974.0	-	-	
3	587395.0	99.8	13	3	1558.0	1696.0	1949.0	

4	796897.0	68.4	13	2	1014.0	1099.0	-	
5	149042.0	80.8	13	2	1736.0	1505.0	-	
6	356750.0	62.5	13	1	1778.0	-	-	
7	563824.0	74.8	13	2	1149.0	1204.0	-	
8	772314.0	50.8	13	1	1049.0	-	-	
9	123796.0	54.0	13	1	1417.0	-	-	
10	331215.0	63.0	13	1	1730.0	-	-	
11	537402.0	91.8	13	3	1143.0	1270.0	1347.0	
12	744805.0	79.3	13	2	1274.0	1992.0	-	
13	98172.0	64.3	13	1	1937.0	-	-	

Statistics 9 (ChirpCenter Frequency: 5260 MHz)

Trial #	Burst Offset (us)	Pulse Width (µS)	Chirp (MHz)	Number of Pulses per Burst	PRI-1 (µS)	PRI-2 (µS)	PRI-3 (µS)	Detection (1:yes;0:no)
0	535615.0	63.4	6	1	1043.0	-	-	1
1	898668.0	52.0	6	1	1863.0	-	-	
2	1259235.0	97.2	6	3	1973.0	1605.0	1583.0	
3	127106.0	78.7	6	2	1466.0	1743.0	-	
4	490358.0	74.2	6	2	1280.0	1219.0	-	
5	852409.0	88.7	6	3	1293.0	1934.0	1273.0	
6	1217152.0	54.3	6	1	1991.0	-	-	
7	82296.0	95.4	6	3	1580.0	1555.0	1791.0	

Radar Type 5 Case2 Statistical Performance

Statistics 10 (ChirpCenter Frequency: 5256.4 MHz)

Trial #	Burst Offset (us)	Pulse Width (µS)	Chirp (MHz)	Number of Pulses per Burst	PRI-1 (µS)	PRI-2 (µS)	PRI-3 (µS)	Detection (1:yes;0:no)
0	209249.0	73.7	16	2	1208.0	1497.0	-	1
1	378386.0	97.4	16	3	1942.0	1754.0	1613.0	
2	548411.0	91.7	16	3	1999.0	1702.0	1462.0	
3	17733.0	66.2	16	1	1393.0	-	-	
4	187952.0	70.8	16	2	1968.0	1821.0	-	
5	359277.0	52.3	16	1	1740.0	-	-	
6	528886.0	78.9	16	2	1308.0	1984.0	-	
7	700166.0	70.9	16	2	1050.0	1358.0	-	
8	167197.0	75.6	16	2	1437.0	1430.0	-	
9	338262.0	59.1	16	1	1697.0	-	-	
10	508324.0	77.0	16	2	1397.0	1304.0	-	
11	678689.0	67.9	16	2	1803.0	1083.0	-	
12	146031.0	81.2	16	2	1720.0	1932.0	-	
13	316923.0	78.7	16	2	1247.0	1121.0	-	
14	488056.0	63.3	16	1	1634.0	-	-	
15	657326.0	68.9	16	2	1849.0	1423.0	-	
16	125509.0	59.3	16	1	1093.0	-	-	

Statistics 11 (ChirpCenter Frequency: 5257.6MHz)

Trial #	Burst Offset (us)	Pulse Width (µS)	Chirp (MHz)	Number of Pulses per Burst	PRI-1 (µS)	PRI-2 (µS)	PRI-3 (µS)	Detection (1:yes;0:no)
0	263736.0	98.9	19	3	1381.0	1680.0	1488.0	1
1	416459.0	82.3	19	2	1716.0	1855.0	-	
2	567902.0	86.7	19	3	1211.0	1400.0	1919.0	
3	92979.0	89.7	19	3	1861.0	1068.0	1282.0	
4	245155.0	98.6	19	3	1507.0	1194.0	1461.0	

5	397609.0	71.1	19	2	1921.0	1789.0	-	
6	551431.0	55.9	19	1	1947.0	-	-	
7	74413.0	67.9	19	2	1350.0	1372.0	-	
8	226559.0	84.4	19	3	1203.0	1107.0	1443.0	
9	380056.0	58.8	19	1	1715.0	-	-	
10	533408.0	65.6	19	1	1017.0	-	-	
11	55547.0	78.5	19	2	1911.0	1704.0	-	
12	207876.0	82.3	19	2	1845.0	1686.0	-	
13	359771.0	90.1	19	3	1938.0	1071.0	1266.0	
14	511297.0	90.2	19	3	1989.0	1089.0	1950.0	
15	36803.0	83.1	19	2	1943.0	1406.0	-	
16	189652.0	58.8	19	1	1742.0	-	-	
17	341809.0	77.0	19	2	1187.0	1657.0	-	
18	495737.0	55.0	19	1	1012.0	-	-	

Statistics 12 (ChirpCenter Frequency: 5255.2MHz)

Trial #	Burst Offset (us)	Pulse Width (µS)	Chirp (MHz)	Number of Pulses per Burst	PRI-1 (µS)	PRI-2 (µS)	PRI-3 (µS)	Detection (1:yes;0:no)
0	22911.0	58.1	13	1	1929.0	-	-	
1	216473.0	52.1	13	1	1910.0	-	-	
2	410004.0	59.9	13	1	1971.0	-	-	
3	603671.0	60.2	13	1	1812.0	-	-	
4	794160.0	95.9	13	3	1399.0	1906.0	1608.0	
5	192251.0	79.9	13	2	1626.0	1859.0	-	
6	385590.0	78.5	13	2	1238.0	1917.0	-	
7	579862.0	53.8	13	1	1763.0	-	-	1
8	773423.0	64.7	13	1	1800.0	-	-	
9	168898.0	61.4	13	1	1390.0	-	-	
10	361606.0	83.2	13	2	1692.0	1858.0	-	
11	553866.0	84.7	13	3	1533.0	1677.0	1638.0	
12	747241.0	88.7	13	3	1703.0	1528.0	1058.0	
13	144710.0	78.3	13	2	1258.0	1951.0	-	
14	337856.0	69.3	13	2	1731.0	1717.0	-	

Statistics 13 (ChirpCenter Frequency: 5254MHz)

Trial #	Burst Offset (us)	Pulse Width (µS)	Chirp (MHz)	Number of Pulses per Burst	PRI-1 (µS)	PRI-2 (µS)	PRI-3 (µS)	Detection (1:yes;0:no)
0	664275.0	75.3	10	2	1994.0	1612.0	-	
1	907886.0	56.3	10	1	1456.0	-	-	
2	151316.0	67.7	10	2	1617.0	1185.0	-	
3	393746.0	55.6	10	1	1337.0	-	-	
4	635093.0	75.2	10	2	1421.0	1267.0	-	
5	876993.0	76.3	10	2	1359.0	1305.0	-	
6	121278.0	85.7	10	3	1547.0	1362.0	1924.0	1
7	362696.0	98.4	10	3	1873.0	1550.0	1249.0	
8	604342.0	86.4	10	3	1779.0	1439.0	1046.0	
9	846453.0	93.6	10	3	1059.0	1031.0	1452.0	
10	91871.0	63.3	10	1	1328.0	-	-	
11	333050.0	92.4	10	3	1412.0	1673.0	1322.0	

Statistics14 (ChirpCenter Frequency: 5257.2 MHz)

Trial	Burst	Pulse	Chirp	Number	PRI-1	PRI-2	PRI-3	Detection

#	Offset (us)	Width (µS)	(MHz)	of Pulses per Burst	(µS)	(µS)	(µS)	(1:yes;0:no)
0	361323.0	93.3	18	3	1983.0	1912.0	1535.0	1
1	515261.0	69.1	18	2	1102.0	1794.0	-	
2	39025.0	86.9	18	3	1044.0	1152.0	1148.0	
3	190900.0	84.9	18	3	1894.0	1948.0	1118.0	
4	343941.0	72.3	18	2	1094.0	1916.0	-	
5	497624.0	51.7	18	1	1447.0	-	-	
6	20319.0	58.3	18	1	1429.0	-	-	
7	172999.0	60.8	18	1	1979.0	-	-	
8	325872.0	57.1	18	1	1641.0	-	-	
9	475841.0	88.9	18	3	1886.0	1964.0	1489.0	
10	1489.0	72.0	18	2	1909.0	1297.0	-	
11	153647.0	90.9	18	3	1261.0	1566.0	1370.0	
12	307096.0	59.8	18	1	1552.0	-	-	
13	458804.0	70.0	18	2	1759.0	1291.0	-	
14	610798.0	67.2	18	2	1625.0	1881.0	-	
15	134759.0	91.2	18	3	1382.0	1832.0	1661.0	
16	288306.0	56.5	18	1	1483.0	-	-	
17	441296.0	51.2	18	1	1237.0	-	-	
18	592780.0	74.1	18	2	1471.0	1245.0	-	

Statistics 15 (ChirpCenter Frequency: 5254.8 MHz)

Trial #	Burst Offset (us)	Pulse Width (µS)	Chirp (MHz)	Number of Pulses per Burst	PRI-1 (µS)	PRI-2 (µS)	PRI-3 (µS)	Detection (1:yes;0:no)
0	158286.0	76.9	12	2	1110.0	1140.0	-	1
1	366024.0	50.2	12	1	1316.0	-	-	
2	573452.0	62.9	12	1	1520.0	-	-	
3	780619.0	64.7	12	1	1902.0	-	-	
4	132455.0	83.8	12	3	1410.0	1097.0	1621.0	
5	340207.0	65.4	12	1	1944.0	-	-	
6	548208.0	53.2	12	1	1024.0	-	-	
7	755333.0	51.7	12	1	1603.0	-	-	
8	107117.0	78.7	12	2	1804.0	1168.0	-	
9	314500.0	72.4	12	2	1030.0	1343.0	-	
10	522447.0	53.8	12	1	1327.0	-	-	
11	728517.0	73.6	12	2	1524.0	1553.0	-	
12	81611.0	66.7	12	2	1722.0	1122.0	-	
13	288948.0	82.5	12	2	1404.0	1019.0	-	

Statistics 16 (ChirpCenter Frequency: 5258 MHz)

Trial #	Burst Offset (us)	Pulse Width (µS)	Chirp (MHz)	Number of Pulses per Burst	PRI-1 (µS)	PRI-2 (µS)	PRI-3 (µS)	Detection (1:yes;0:no)
0	345766.0	87.6	20	3	1565.0	1055.0	1840.0	1
1	490019.0	85.2	20	3	1735.0	1541.0	1408.0	
2	39073.0	84.8	20	3	1534.0	1889.0	1463.0	
3	183923.0	77.9	20	2	1749.0	1460.0	-	
4	328777.0	76.5	20	2	1518.0	1485.0	-	

5	474728.0	60.9	20	1	1540.0	-	-	
6	21394.0	83.0	20	2	1080.0	1010.0	-	
7	165992.0	80.4	20	2	1824.0	1752.0	-	
8	310973.0	67.5	20	2	1764.0	1181.0	-	
9	456884.0	62.1	20	1	1495.0	-	-	
10	3515.0	86.4	20	3	1773.0	1966.0	1263.0	
11	147928.0	84.3	20	3	1593.0	1188.0	1788.0	
12	293225.0	76.9	20	2	1226.0	1537.0	-	
13	436922.0	95.8	20	3	1192.0	1298.0	1844.0	
14	584015.0	55.2	20	1	1644.0	-	-	
15	130832.0	59.0	20	1	1402.0	-	-	
16	274684.0	94.5	20	3	1296.0	1700.0	1283.0	
17	418579.0	91.9	20	3	1970.0	1978.0	1165.0	
18	563464.0	85.2	20	3	1732.0	1551.0	1189.0	
19	112787.0	69.5	20	2	1038.0	1224.0	-	

Statistics 17 (ChirpCenter Frequency: 5254 MHz)

Trial #	Burst Offset (us)	Pulse Width (µS)	Chirp (MHz)	Number of Pulses per Burst	PRI-1 (µS)	PRI-2 (µS)	PRI-3 (µS)	Detection (1:yes;0:no)
0	429224.0	86.4	10	3	1259.0	1918.0	1455.0	1
1	670241.0	92.2	10	3	1598.0	1719.0	1895.0	
2	912880.0	80.4	10	2	1816.0	1899.0	-	
3	158603.0	54.3	10	1	1335.0	-	-	
4	400824.0	53.1	10	1	1303.0	-	-	
5	641915.0	69.4	10	2	1503.0	1546.0	-	
6	883823.0	69.1	10	2	1279.0	1639.0	-	
7	128373.0	100.0	10	3	1375.0	1438.0	1595.0	
8	370379.0	79.6	10	2	1239.0	1705.0	-	
9	611194.0	88.4	10	3	1374.0	1579.0	1623.0	
10	855665.0	53.3	10	1	1016.0	-	-	
11	98897.0	65.3	10	1	1709.0	-	-	

Statistics 18 (ChirpCenter Frequency: 5254.8 MHz)

Trial #	Burst Offset (us)	Pulse Width (µS)	Chirp (MHz)	Number of Pulses per Burst	PRI-1 (µS)	PRI-2 (µS)	PRI-3 (µS)	Detection (1:yes;0:no)
0	292143.0	55.3	12	1	1920.0	-	-	1
1	499633.0	58.3	12	1	1797.0	-	-	
2	706377.0	72.3	12	2	1610.0	1039.0	-	
3	58989.0	84.8	12	3	1131.0	1761.0	1721.0	
4	266161.0	82.5	12	2	1875.0	1431.0	-	
5	474469.0	63.3	12	1	1095.0	-	-	
6	680544.0	80.0	12	2	1119.0	1913.0	-	
7	33519.0	90.3	12	3	1660.0	1853.0	1123.0	
8	240319.0	91.1	12	3	1539.0	1783.0	1172.0	
9	447400.0	96.6	12	3	1525.0	1036.0	1385.0	
10	654516.0	82.7	12	2	1710.0	1990.0	-	
11	8083.0	50.7	12	1	1234.0	-	-	
12	215435.0	78.4	12	2	1047.0	1109.0	-	
13	421325.0	99.5	12	3	1299.0	1965.0	1869.0	

Statistics 19 (ChirpCenter Frequency: 5254 MHz)

Trial #	Burst Offset (us)	Pulse Width (µS)	Chirp (MHz)	Number of Pulses per Burst	PRI-1 (µS)	PRI-2 (µS)	PRI-3 (µS)	Detection (1:yes;0:no)
0	733725.0	88.6	10	3	1501.0	1067.0	1927.0	1
1	977882.0	57.4	10	1	1723.0	-	-	
2	221197.0	96.6	10	3	1086.0	1658.0	1324.0	
3	462915.0	69.7	10	2	1751.0	1945.0	-	
4	705071.0	77.9	10	2	1642.0	1317.0	-	
5	947923.0	62.0	10	1	1866.0	-	-	
6	191373.0	88.4	10	3	1997.0	1077.0	1366.0	
7	432561.0	97.3	10	3	1790.0	1896.0	1367.0	
8	674004.0	96.2	10	3	1391.0	1787.0	1672.0	
9	915842.0	95.4	10	3	1020.0	1892.0	1414.0	
10	162176.0	54.8	10	1	1084.0	-	-	
11	403553.0	80.4	10	2	1850.0	1436.0	-	

Radar Type 5 Case3 Statistical Performance

Statistics 20 (ChirpCenter Frequency:5264MHz)

Trial #	Burst Offset (us)	Pulse Width (µS)	Chirp (MHz)	Number of Pulses per Burst	PRI-1 (µS)	PRI-2 (µS)	PRI-3 (µS)	Detection (1:yes;0:no)
0	483470.0	74.7	15	2	1619.0	1611.0	-	1
1	666072.0	57.1	15	1	1560.0	-	-	
2	98810.0	91.9	15	3	1392.0	1475.0	1276.0	
3	279914.0	83.1	15	2	1809.0	1772.0	-	
4	462536.0	50.7	15	1	1003.0	-	-	
5	642324.0	79.2	15	2	1574.0	1600.0	-	
6	76831.0	58.7	15	1	1186.0	-	-	
7	257785.0	71.0	15	2	1521.0	1567.0	-	
8	438554.0	79.0	15	2	1777.0	1960.0	-	
9	620397.0	68.5	15	2	1284.0	1428.0	-	
10	54310.0	73.5	15	2	1904.0	1352.0	-	
11	235506.0	70.5	15	2	1864.0	1115.0	-	
12	417036.0	76.6	15	2	1045.0	1300.0	-	
13	597974.0	81.2	15	2	1160.0	1675.0	-	
14	32086.0	61.8	15	1	1277.0	-	-	
15	212751.0	94.9	15	3	1450.0	1206.0	1860.0	

Statistics 21 (ChirpCenter Frequency: 5266.4 MHz)

Trial #	Burst Offset (us)	Pulse Width (µS)	Chirp (MHz)	Number of Pulses per Burst	PRI-1 (µS)	PRI-2 (µS)	PRI-3 (µS)	Detection (1:yes;0:no)
0	526149.0	78.5	9	2	1653.0	1698.0	-	1
1	767135.0	89.8	9	3	1174.0	1962.0	1167.0	
2	12955.0	59.4	9	1	1982.0	-	-	
3	254612.0	79.6	9	2	1633.0	1890.0	-	
4	496588.0	76.0	9	2	1112.0	1811.0	-	
5	739728.0	53.6	9	1	1144.0	-	-	
6	980872.0	80.9	9	2	1220.0	1053.0	-	
7	225249.0	61.6	9	1	1724.0	-	-	

8	467279.0	53.4	9	1	1901.0	-	-	
9	709720.0	59.9	9	1	1379.0	-	-	
10	951847.0	60.4	9	1	1453.0	-	-	
11	194839.0	91.4	9	3	1768.0	1726.0	1227.0	

Statistics 22 (ChirpCenter Frequency: 5262MHz)

Trial #	Burst Offset (us)	Pulse Width (µS)	Chirp (MHz)	Number of Pulses per Burst	PRI-1 (µS)	PRI-2 (µS)	PRI-3 (µS)	Detection (1:yes;0:no)
0	261858.0	77.0	20	2	1191.0	1363.0	-	1
1	407646.0	58.1	20	1	1248.0	-	-	
2	552319.0	62.1	20	1	1836.0	-	-	
3	99107.0	76.9	20	2	1334.0	1236.0	-	
4	243514.0	80.0	20	2	1914.0	1852.0	-	
5	389464.0	52.0	20	1	1701.0	-	-	
6	531093.0	88.6	20	3	1693.0	1995.0	1905.0	
7	81159.0	72.9	20	2	1922.0	1387.0	-	
8	225245.0	98.5	20	3	1839.0	1746.0	1389.0	
9	371906.0	57.9	20	1	1193.0	-	-	
10	514197.0	95.9	20	3	1659.0	1870.0	1066.0	
11	63561.0	53.5	20	1	1162.0	-	-	
12	207510.0	92.0	20	3	1745.0	1654.0	1458.0	
13	353638.0	57.3	20	1	1834.0	-	-	
14	497515.0	70.5	20	2	1684.0	1586.0	-	
15	45553.0	70.0	20	2	1042.0	1664.0	-	
16	189821.0	84.0	20	3	1765.0	1630.0	1176.0	
17	335330.0	76.1	20	2	1557.0	1057.0	-	
18	478825.0	93.2	20	3	1985.0	1018.0	1340.0	
19	27594.0	96.8	20	3	1760.0	1614.0	1817.0	

Statistics 23 (ChirpCenter Frequency:5265.2MHz)

Trial #	Burst Offset(us)	Pulse Width (µS)	Chirp (MHz)	Number of Pulses per Burst	PRI-1 (µS)	PRI-2 (µS)	PRI-3 (µS)	Detection (1:yes;0:no)
0	247117.0	50.1	12	1	1841.0	-	-	1
1	453362.0	93.5	12	3	1590.0	1081.0	1413.0	
2	660875.0	68.8	12	2	1707.0	1577.0	-	
3	14140.0	56.3	12	1	1056.0	-	-	
4	220734.0	86.0	12	3	1953.0	1108.0	1987.0	
5	428367.0	75.2	12	2	1572.0	1536.0	-	
6	636681.0	54.4	12	1	1517.0	-	-	
7	843157.0	71.1	12	2	1329.0	1243.0	-	
8	195585.0	76.2	12	2	1940.0	1770.0	-	
9	403231.0	80.2	12	2	1098.0	1209.0	-	
10	610202.0	79.7	12	2	1588.0	1214.0	-	
11	815229.0	90.9	12	3	1615.0	1862.0	1601.0	
12	170267.0	68.7	12	2	1377.0	1441.0	-	
13	377306.0	67.4	12	2	1872.0	1313.0	-	

Statistics 24 (ChirpCenter Frequency: 5265.6 MHz)

Trial #	Burst Offset (us)	Pulse Width	Chirp (MHz)	Number of	PRI-1 (µS)	PRI-2 (µS)	PRI-3 (µS)	Detection (1:yes;0:no)

		(µS)		Pulses per Burst				
0	628071.0	94.0	11	3	1643.0	1748.0	1941.0	1
1	853391.0	70.8	11	2	1177.0	1201.0	-	
2	156223.0	56.3	11	1	1006.0	-	-	
3	378734.0	96.7	11	3	1230.0	1163.0	1332.0	
4	601331.0	90.6	11	3	1217.0	1582.0	1498.0	
5	825462.0	74.5	11	2	1569.0	1281.0	-	
6	128265.0	92.6	11	3	1065.0	1669.0	1222.0	
7	351161.0	89.0	11	3	1493.0	1135.0	1380.0	
8	573425.0	96.5	11	3	1607.0	1822.0	1602.0	
9	798431.0	70.5	11	2	1141.0	1178.0	-	
10	100737.0	94.0	11	3	1009.0	1629.0	1956.0	
11	324661.0	55.8	11	1	1290.0	-	-	
12	546278.0	87.7	11	3	1435.0	1963.0	1164.0	

Statistics 25 (ChirpCenter Frequency: 5268 MHz)

Trial #	Burst Offset (us)	Pulse Width (µS)	Chirp (MHz)	Number of Pulses per Burst	PRI-1 (µS)	PRI-2 (µS)	PRI-3 (µS)	Detection (1:yes;0:no)
0	1253842.0	68.6	5	2	1306.0	1161.0	-	1
1	119486.0	83.1	5	2	1420.0	1315.0	-	
2	482958.0	60.9	5	1	1687.0	-	-	
3	845641.0	77.7	5	2	1776.0	1158.0	-	
4	1208428.0	77.4	5	2	1793.0	1510.0	-	
5	74748.0	66.8	5	2	1576.0	1323.0	-	
6	438300.0	63.7	5	1	1333.0	-	-	
7	800152.0	91.2	5	3	1409.0	1681.0	1275.0	

Statistics 26 (ChirpCenter Frequency: 5263.6 MHz)

Trial #	Burst Offset (us)	Pulse Width (µS)	Chirp (MHz)	Number of Pulses per Burst	PRI-1 (µS)	PRI-2 (µS)	PRI-3 (µS)	Detection (1:yes;0:no)
0	545865.0	83.6	16	3	1632.0	1195.0	1000.0	1
1	14067.0	89.4	16	3	1173.0	1627.0	1656.0	
2	184953.0	55.8	16	1	1532.0	-	-	
3	353759.0	90.9	16	3	1981.0	1554.0	1998.0	
4	526388.0	54.7	16	1	1825.0	-	-	
5	694806.0	97.7	16	3	1734.0	1202.0	1250.0	
6	163568.0	67.5	16	2	1571.0	1434.0	-	
7	333410.0	96.7	16	3	1589.0	1469.0	1268.0	
8	504006.0	68.3	16	2	1750.0	1954.0	-	
9	675297.0	78.3	16	2	1591.0	1082.0	-	
10	142890.0	55.0	16	1	1427.0	-	-	
11	312479.0	84.9	16	3	1129.0	1936.0	1199.0	
12	482953.0	74.6	16	2	1959.0	1856.0	-	
13	655022.0	63.3	16	1	1885.0	-	-	
14	121457.0	99.8	16	3	1035.0	1515.0	1120.0	
15	292606.0	63.6	16	1	1647.0	-	-	
16	461322.0	87.3	16	3	1931.0	1051.0	1831.0	

Statistics 27 (ChirpCenter Frequency: 5262.4 MHz)

Trial #	Burst Offset (us)	Pulse Width (µS)	Chirp (MHz)	Number of Pulses per Burst	PRI-1 (µS)	PRI-2 (µS)	PRI-3 (µS)	Detection (1:yes;0:no)
0	565136.0	85.6	19	3	1946.0	1078.0	1015.0	1
1	89970.0	68.6	19	2	1029.0	1780.0	-	
2	243121.0	54.2	19	1	1111.0	-	-	
3	396034.0	61.2	19	1	1104.0	-	-	
4	546225.0	97.1	19	3	1157.0	1969.0	1100.0	
5	70998.0	98.3	19	3	1142.0	1699.0	1622.0	
6	224093.0	62.4	19	1	1655.0	-	-	
7	376127.0	80.2	19	2	1126.0	1769.0	-	
8	527806.0	87.5	19	3	1216.0	1448.0	1179.0	
9	52247.0	85.8	19	3	1847.0	1348.0	1472.0	
10	204582.0	88.1	19	3	1023.0	1124.0	1631.0	
11	357941.0	65.3	19	1	1848.0	-	-	
12	510977.0	52.5	19	1	1470.0	-	-	
13	33698.0	52.3	19	1	1312.0	-	-	
14	186023.0	74.1	19	2	1915.0	1200.0	-	
15	339327.0	54.9	19	1	1479.0	-	-	
16	491053.0	76.2	19	2	1376.0	1502.0	-	
17	14858.0	60.4	19	1	1758.0	-	-	
18	167387.0	81.5	19	2	1491.0	1103.0	-	

Statistics 28 (ChirpCenter Frequency: 5266 MHz)

Trial #	Burst Offset (us)	Pulse Width (µS)	Chirp (MHz)	Number of Pulses per Burst	PRI-1 (µS)	Pulse 2-3 Spacing (µS)	Pulse Start (mS)	Detection (1:yes;0:no)
0	507709.0	50.5	10	1	1857.0	-	-	1
1	750249.0	55.7	10	1	1246.0	-	-	
2	989003.0	85.8	10	3	1774.0	1002.0	1967.0	
3	235634.0	76.9	10	2	1125.0	1474.0	-	
4	477675.0	75.1	10	2	1254.0	1052.0	-	
5	718312.0	92.3	10	3	1180.0	1486.0	1492.0	
6	960895.0	78.1	10	2	1301.0	1757.0	-	
7	205370.0	92.2	10	3	1898.0	1252.0	1713.0	
8	446940.0	89.0	10	3	1260.0	1706.0	1411.0	
9	689225.0	70.9	10	2	1578.0	1620.0	-	
10	932305.0	63.1	10	1	1782.0	-	-	
11	176231.0	55.3	10	1	1522.0	-	-	

Statistics 29 (ChirpCenter Frequency: 5263.2 MHz)

Trial #	Burst Offset (us)	Pulse Width (µS)	Chirp (MHz)	Number of Pulses per Burst	PRI-1 (µS)	Pulse 2-3 Spacing (µS)	Pulse Start (mS)	Detection (1:yes;0:no)
0	437880.0	97.3	17	3	1319.0	1826.0	1635.0	1
1	598445.0	90.4	17	3	1079.0	1986.0	1674.0	
2	97088.0	91.8	17	3	1563.0	1151.0	1802.0	
3	257251.0	98.2	17	3	1876.0	1977.0	1766.0	
4	419893.0	59.5	17	1	1952.0	-	-	

5	580724.0	80.0	17	2	1253.0	1137.0	-	
6	77366.0	86.5	17	3	1054.0	1128.0	1828.0	
7	238032.0	91.1	17	3	1105.0	1599.0	1442.0	
8	398605.0	93.5	17	3	1867.0	1373.0	1087.0	
9	562025.0	60.7	17	1	1033.0	-	-	
10	57684.0	67.2	17	2	1288.0	1405.0	-	
11	219083.0	61.8	17	1	1585.0	-	-	
12	379234.0	79.4	17	2	1933.0	1667.0	-	
13	540896.0	81.4	17	2	1096.0	1464.0	-	
14	37916.0	65.7	17	1	1496.0	-	-	
15	198794.0	76.0	17	2	1733.0	1255.0	-	
16	359754.0	81.0	17	2	1326.0	1668.0	-	
17	437880.0	97.3	17	3	1319.0	1826.0	1635.0	

11AC40MIMO-5310MHz:
Radar Type 5 Case1 Statistical Performance

Statistics 0 (ChirpCenter Frequency: 5310 MHz)

Trial #	Burst Offset (us)	Pulse Width (µS)	Chirp (MHz)	Number of Pulses per Burst	PRI-1 (µS)	PRI-2 (µS)	PRI-3 (µS)	Detection (1:yes;0:no)
0	636185.0	77.8	13	2	1665.0	1477.0	-	1
1	32674.0	51.9	13	1	1074.0	-	-	
2	226294.0	63.8	13	1	1584.0	-	-	
3	417976.0	96.6	13	3	1682.0	1786.0	1843.0	
4	611152.0	85.9	13	3	1795.0	1215.0	1729.0	
5	8789.0	73.7	13	2	1198.0	1549.0	-	
6	201917.0	77.2	13	2	1837.0	1819.0	-	
7	395530.0	68.4	13	2	1587.0	1114.0	-	
8	588564.0	76.7	13	2	2000.0	1155.0	-	
9	783794.0	53.2	13	1	1147.0	-	-	
10	177933.0	85.7	13	3	1433.0	1695.0	1394.0	
11	370624.0	94.3	13	3	1670.0	1426.0	1935.0	
12	564893.0	77.6	13	2	1294.0	1671.0	-	
13	759583.0	65.7	13	1	1512.0	-	-	
14	154262.0	93.5	13	3	1444.0	1130.0	1468.0	

Statistics 1 (ChirpCenter Frequency: 5310 MHz)

Trial #	Burst Offset (us)	Pulse Width (µS)	Chirp (MHz)	Number of Pulses per Burst	PRI-1 (µS)	PRI-2 (µS)	PRI-3 (µS)	Detection (1:yes;0:no)
0	653020.0	75.0	5	2	1880.0	1527.0	-	1
1	1015643.0	99.4	5	3	1401.0	1262.0	1257.0	
2	1379398.0	67.4	5	2	1531.0	1403.0	-	
3	245489.0	73.6	5	2	1449.0	1041.0	-	
4	609113.0	65.9	5	1	1432.0	-	-	
5	970852.0	83.8	5	3	1356.0	1292.0	1419.0	
6	1335913.0	65.5	5	1	1543.0	-	-	
7	200406.0	98.6	5	3	1548.0	1796.0	1728.0	

Statistics 2 (ChirpCenter Frequency: 5310 MHz)

Trial #	Burst Offset (us)	Pulse Width (µS)	Chirp (MHz)	Number of Pulses per Burst	PRI-1 (µS)	PRI-2 (µS)	PRI-3 (µS)	Detection (1:yes;0:no)
0	409565.0	73.8	9	2	1806.0	1538.0	-	1
1	673692.0	69.5	9	2	1117.0	1649.0	-	
2	938562.0	51.9	9	1	1651.0	-	-	
3	113209.0	84.6	9	3	1976.0	1032.0	1271.0	
4	376726.0	95.4	9	3	1060.0	1903.0	1388.0	
5	641212.0	68.0	9	2	1368.0	1351.0	-	
6	903714.0	89.6	9	3	1338.0	1514.0	1573.0	
7	80863.0	81.9	9	2	1022.0	1689.0	-	
8	344067.0	88.3	9	3	1810.0	1330.0	1838.0	
9	609331.0	53.7	9	1	1597.0	-	-	
10	871542.0	91.3	9	3	1961.0	1106.0	1001.0	

Statistics 3 (ChirpCenter Frequency: 5310 MHz)

Trial #	Burst Offset (us)	Pulse Width (µS)	Chirp (MHz)	Number of Pulses per Burst	PRI-1 (µS)	PRI-2 (µS)	PRI-3 (µS)	Detection (1:yes;0:no)
0	26541.0	68.1	19	2	1339.0	1355.0	-	1
1	171821.0	58.7	19	1	1251.0	-	-	
2	316229.0	75.3	19	2	1136.0	1640.0	-	
3	461864.0	56.4	19	1	1753.0	-	-	
4	8677.0	99.7	19	3	1196.0	1708.0	1159.0	
5	153995.0	57.7	19	1	1013.0	-	-	
6	299238.0	59.5	19	1	1072.0	-	-	
7	443177.0	80.0	19	2	1482.0	1369.0	-	
8	587671.0	82.0	19	2	1993.0	1197.0	-	
9	135674.0	82.8	19	2	1883.0	1005.0	-	
10	279928.0	88.0	19	3	1061.0	1928.0	1101.0	
11	424279.0	93.2	19	3	1207.0	1907.0	1223.0	
12	570132.0	70.4	19	2	1526.0	1360.0	-	
13 14	117439.0	95.3	19	3	1171.0	1955.0	1775.0	
15	262502.0	81.9	19	2	1690.0	1545.0	-	
16	406573.0	98.5	19	3	1975.0	1169.0	1062.0	
17	553328.0	65.0	19	1	1767.0	-	-	
18	99799.0	85.4	19	3	1011.0	1637.0	1425.0	
19	244095.0	91.6	19	3	1878.0	1445.0	1325.0	

Statistics 4 (ChirpCenter Frequency: 5310 MHz)

Trial #	Burst Offset (us)	Pulse Width (µS)	Chirp (MHz)	Number of Pulses per Burst	PRI-1 (µS)	PRI-2 (µS)	PRI-3 (µS)	Detection (1:yes;0:no)
0	629614.0	67.9	16	2	1320.0	1133.0	-	1
1	96856.0	62.3	16	1	1957.0	-	-	
2	267719.0	53.3	16	1	1592.0	-	-	
3	436784.0	90.0	16	3	1900.0	1153.0	1346.0	
4	608289.0	77.1	16	2	1166.0	1646.0	-	
5	75610.0	83.9	16	3	1278.0	1232.0	1459.0	
6	245638.0	89.1	16	3	1240.0	1384.0	1939.0	
7	416355.0	81.8	16	2	1833.0	1676.0	-	
8	588736.0	50.3	16	1	1075.0	-	-	
9	54571.0	87.1	16	3	1116.0	1996.0	1756.0	
10	225175.0	71.3	16	2	1225.0	1815.0	-	

11	394825.0	97.5	16	3	1884.0	1465.0	1132.0	
12	565361.0	90.6	16	3	1561.0	1040.0	1354.0	
13	33643.0	86.3	16	3	1596.0	1183.0	1792.0	
14	203957.0	97.6	16	3	1365.0	1073.0	1361.0	
15	373812.0	84.7	16	3	1021.0	1718.0	1854.0	
16	544060.0	99.7	16	3	1150.0	1244.0	1988.0	

Statistics 5 (ChirpCenter Frequency: 5310 MHz)

Trial #	Burst Offset (us)	Pulse Width (µS)	Chirp (MHz)	Number of Pulses per Burst	PRI-1 (µS)	PRI-2 (µS)	PRI-3 (µS)	Detection (1:yes;0:no)
0	15438.0	92.9	12	3	1085.0	1564.0	1407.0	1
1	222486.0	67.7	12	2	1744.0	1747.0	-	
2	430731.0	65.8	12	1	1092.0	-	-	
3	637784.0	56.3	12	1	1851.0	-	-	
4	845342.0	53.7	12	1	1727.0	-	-	
5	196720.0	83.5	12	3	1679.0	1930.0	1025.0	
6	404955.0	65.8	12	1	1519.0	-	-	
7	610711.0	85.9	12	3	1134.0	1034.0	1808.0	
8	818057.0	76.3	12	2	1606.0	1926.0	-	
9	171459.0	81.5	12	2	1891.0	1714.0	-	
10	377969.0	89.4	12	3	1310.0	1594.0	1827.0	
11	586875.0	63.4	12	1	1568.0	-	-	
12	792834.0	69.6	12	2	1307.0	1925.0	-	
13	146044.0	74.5	12	2	1264.0	1846.0	-	

Statistics 6 (ChirpCenter Frequency: 5310 MHz)

Trial #	Burst Offset (us)	Pulse Width (µS)	Chirp (MHz)	Number of Pulses per Burst	PRI-1 (µS)	PRI-2 (µS)	PRI-3 (µS)	Detection (1:yes;0:no)
0	329022.0	96.6	13	3	1182.0	1609.0	1581.0	1
1	521718.0	96.7	13	3	1829.0	1799.0	1154.0	
2	714222.0	86.5	13	3	1923.0	1396.0	1865.0	
3	112450.0	73.3	13	2	1908.0	1318.0	-	
4	306283.0	55.8	13	1	1688.0	-	-	
5	500239.0	55.4	13	1	1145.0	-	-	
6	690932.0	85.3	13	3	1336.0	1504.0	1820.0	
7	88645.0	79.4	13	2	1344.0	1893.0	-	
8	282508.0	65.7	13	1	1476.0	-	-	
9	475842.0	68.6	13	2	1008.0	1028.0	-	
10	667887.0	77.7	13	2	1972.0	1835.0	-	
11	64845.0	79.6	13	2	1882.0	1331.0	-	
12	257755.0	94.9	13	3	1830.0	1070.0	1349.0	
13	452335.0	61.4	13	1	1451.0	-	-	
14	643395.0	90.6	13	3	1233.0	1562.0	1887.0	
15	329022.0	96.6	13	3	1182.0	1609.0	1581.0	

Statistics 7 (ChirpCenter Frequency: 5310 MHz)

Trial #	Burst Offset (us)	Pulse Width (µS)	Chirp (MHz)	Number of Pulses per Burst	PRI-1 (µS)	PRI-2 (µS)	PRI-3 (µS)	Detection (1:yes;0:no)
0	51446.0	52.6	10	1	1210.0	-	-	1
1	292696.0	84.1	10	3	1314.0	1725.0	1529.0	

2	533989.0	97.7	10	3	1139.0	1868.0	1805.0	
3	775564.0	97.3	10	3	1341.0	1446.0	1755.0	
4	21542.0	98.8	10	3	1544.0	1386.0	1302.0	
5	263385.0	72.2	10	2	1771.0	1184.0	-	
6	505581.0	67.6	10	2	1175.0	1027.0	-	
7	747058.0	75.7	10	2	1026.0	1871.0	-	
8	989976.0	60.9	10	1	1798.0	-	-	
9	234024.0	64.2	10	1	1138.0	-	-	
10	475207.0	78.8	10	2	1784.0	1604.0	-	
11	715825.0	87.5	10	3	1511.0	1712.0	1683.0	

Statistics 8 (ChirpCenter Frequency: 5310 MHz)

Trial #	Burst Offset (us)	Pulse Width (µS)	Chirp (MHz)	Number of Pulses per Burst	PRI-1 (µS)	PRI-2 (µS)	PRI-3 (µS)	Detection (1:yes;0:no)
0	823112.0	54.1	13	1	1415.0	-	-	1
1	174965.0	50.7	13	1	1221.0	-	-	
2	382216.0	52.3	13	1	1974.0	-	-	
3	587395.0	99.8	13	3	1558.0	1696.0	1949.0	
4	796897.0	68.4	13	2	1014.0	1099.0	-	
5	149042.0	80.8	13	2	1736.0	1505.0	-	
6	356750.0	62.5	13	1	1778.0	-	-	
7	563824.0	74.8	13	2	1149.0	1204.0	-	
8	772314.0	50.8	13	1	1049.0	-	-	
9	123796.0	54.0	13	1	1417.0	-	-	
10	331215.0	63.0	13	1	1730.0	-	-	
11	537402.0	91.8	13	3	1143.0	1270.0	1347.0	
12	744805.0	79.3	13	2	1274.0	1992.0	-	
13	98172.0	64.3	13	1	1937.0	-	-	

Statistics 9 (ChirpCenter Frequency: 5310 MHz)

Trial #	Burst Offset (us)	Pulse Width (µS)	Chirp (MHz)	Number of Pulses per Burst	PRI-1 (µS)	PRI-2 (µS)	PRI-3 (µS)	Detection (1:yes;0:no)
0	535615.0	63.4	6	1	1043.0	-	-	1
1	898668.0	52.0	6	1	1863.0	-	-	
2	1259235.0	97.2	6	3	1973.0	1605.0	1583.0	
3	127106.0	78.7	6	2	1466.0	1743.0	-	
4	490358.0	74.2	6	2	1280.0	1219.0	-	
5	852409.0	88.7	6	3	1293.0	1934.0	1273.0	
6	1217152.0	54.3	6	1	1991.0	-	-	
7	82296.0	95.4	6	3	1580.0	1555.0	1791.0	

Radar Type 5 Case2 Statistical Performance

Statistics 10 (ChirpCenter Frequency: 5296.4 MHz)

Trial #	Burst Offset (us)	Pulse Width (µS)	Chirp (MHz)	Number of Pulses per Burst	PRI-1 (µS)	PRI-2 (µS)	PRI-3 (µS)	Detection (1:yes;0:no)
0	209249.0	73.7	16	2	1208.0	1497.0	-	1
1	378386.0	97.4	16	3	1942.0	1754.0	1613.0	
2	548411.0	91.7	16	3	1999.0	1702.0	1462.0	
3	17733.0	66.2	16	1	1393.0	-	-	
4	187952.0	70.8	16	2	1968.0	1821.0	-	
5	359277.0	52.3	16	1	1740.0	-	-	
6	528886.0	78.9	16	2	1308.0	1984.0	-	

7	700166.0	70.9	16	2	1050.0	1358.0	-	
8	167197.0	75.6	16	2	1437.0	1430.0	-	
9	338262.0	59.1	16	1	1697.0	-	-	
10	508324.0	77.0	16	2	1397.0	1304.0	-	
11	678689.0	67.9	16	2	1803.0	1083.0	-	
12	146031.0	81.2	16	2	1720.0	1932.0	-	
13	316923.0	78.7	16	2	1247.0	1121.0	-	
14	488056.0	63.3	16	1	1634.0	-	-	
15	657326.0	68.9	16	2	1849.0	1423.0	-	
16	125509.0	59.3	16	1	1093.0	-	-	

Statistics 11 (ChirpCenter Frequency: 5297.6MHz)

Trial #	Burst Offset (us)	Pulse Width (µS)	Chirp (MHz)	Number of Pulses per Burst	PRI-1 (µS)	PRI-2 (µS)	PRI-3 (µS)	Detection (1:yes;0:no)
0	263736.0	98.9	19	3	1381.0	1680.0	1488.0	
1	416459.0	82.3	19	2	1716.0	1855.0	-	
2	567902.0	86.7	19	3	1211.0	1400.0	1919.0	
3	92979.0	89.7	19	3	1861.0	1068.0	1282.0	
4	245155.0	98.6	19	3	1507.0	1194.0	1461.0	
5	397609.0	71.1	19	2	1921.0	1789.0	-	
6	551431.0	55.9	19	1	1947.0	-	-	
7	74413.0	67.9	19	2	1350.0	1372.0	-	
8	226559.0	84.4	19	3	1203.0	1107.0	1443.0	
9	380056.0	58.8	19	1	1715.0	-	-	1
10	533408.0	65.6	19	1	1017.0	-	-	
11	55547.0	78.5	19	2	1911.0	1704.0	-	
12	207876.0	82.3	19	2	1845.0	1686.0	-	
13	359771.0	90.1	19	3	1938.0	1071.0	1266.0	
14	511297.0	90.2	19	3	1989.0	1089.0	1950.0	
15	36803.0	83.1	19	2	1943.0	1406.0	-	
16	189652.0	58.8	19	1	1742.0	-	-	
17	341809.0	77.0	19	2	1187.0	1657.0	-	
18	495737.0	55.0	19	1	1012.0	-	-	

Statistics 12 (ChirpCenter Frequency: 5295.2MHz)

Trial #	Burst Offset (us)	Pulse Width (µS)	Chirp (MHz)	Number of Pulses per Burst	PRI-1 (µS)	PRI-2 (µS)	PRI-3 (µS)	Detection (1:yes;0:no)
0	22911.0	58.1	13	1	1929.0	-	-	
1	216473.0	52.1	13	1	1910.0	-	-	
2	410004.0	59.9	13	1	1971.0	-	-	
3	603671.0	60.2	13	1	1812.0	-	-	
4	794160.0	95.9	13	3	1399.0	1906.0	1608.0	
5	192251.0	79.9	13	2	1626.0	1859.0	-	
6	385590.0	78.5	13	2	1238.0	1917.0	-	
7	579862.0	53.8	13	1	1763.0	-	-	1
8	773423.0	64.7	13	1	1800.0	-	-	
9	168898.0	61.4	13	1	1390.0	-	-	
10	361606.0	83.2	13	2	1692.0	1858.0	-	
11	553866.0	84.7	13	3	1533.0	1677.0	1638.0	
12	747241.0	88.7	13	3	1703.0	1528.0	1058.0	
13	144710.0	78.3	13	2	1258.0	1951.0	-	
14	337856.0	69.3	13	2	1731.0	1717.0	-	

Statistics 13 (ChirpCenter Frequency: 5294MHz)

Trial #	Burst Offset (us)	Pulse Width (µS)	Chirp (MHz)	Number of Pulses per Burst	PRI-1 (µS)	PRI-2 (µS)	PRI-3 (µS)	Detection (1:yes;0:no)
0	664275.0	75.3	10	2	1994.0	1612.0	-	1
1	907886.0	56.3	10	1	1456.0	-	-	
2	151316.0	67.7	10	2	1617.0	1185.0	-	
3	393746.0	55.6	10	1	1337.0	-	-	
4	635093.0	75.2	10	2	1421.0	1267.0	-	
5	876993.0	76.3	10	2	1359.0	1305.0	-	
6	121278.0	85.7	10	3	1547.0	1362.0	1924.0	
7	362696.0	98.4	10	3	1873.0	1550.0	1249.0	
8	604342.0	86.4	10	3	1779.0	1439.0	1046.0	
9	846453.0	93.6	10	3	1059.0	1031.0	1452.0	
10	91871.0	63.3	10	1	1328.0	-	-	
11	333050.0	92.4	10	3	1412.0	1673.0	1322.0	

Statistics14 (ChirpCenter Frequency: 5297.2 MHz)

Trial #	Burst Offset (us)	Pulse Width (µS)	Chirp (MHz)	Number of Pulses per Burst	PRI-1 (µS)	PRI-2 (µS)	PRI-3 (µS)	Detection (1:yes;0:no)
0	361323.0	93.3	18	3	1983.0	1912.0	1535.0	1
1	515261.0	69.1	18	2	1102.0	1794.0	-	
2	39025.0	86.9	18	3	1044.0	1152.0	1148.0	
3	190900.0	84.9	18	3	1894.0	1948.0	1118.0	
4	343941.0	72.3	18	2	1094.0	1916.0	-	
5	497624.0	51.7	18	1	1447.0	-	-	
6	20319.0	58.3	18	1	1429.0	-	-	
7	172999.0	60.8	18	1	1979.0	-	-	
8	325872.0	57.1	18	1	1641.0	-	-	
9	475841.0	88.9	18	3	1886.0	1964.0	1489.0	
10	1489.0	72.0	18	2	1909.0	1297.0	-	
11	153647.0	90.9	18	3	1261.0	1566.0	1370.0	
12	307096.0	59.8	18	1	1552.0	-	-	
13	458804.0	70.0	18	2	1759.0	1291.0	-	
14	610798.0	67.2	18	2	1625.0	1881.0	-	
15	134759.0	91.2	18	3	1382.0	1832.0	1661.0	
16	288306.0	56.5	18	1	1483.0	-	-	
17	441296.0	51.2	18	1	1237.0	-	-	
18	592780.0	74.1	18	2	1471.0	1245.0	-	

Statistics 15 (ChirpCenter Frequency: 5294.8 MHz)

Trial #	Burst Offset (us)	Pulse Width (µS)	Chirp (MHz)	Number of Pulses per Burst	PRI-1 (µS)	PRI-2 (µS)	PRI-3 (µS)	Detection (1:yes;0:no)
0	158286.0	76.9	12	2	1110.0	1140.0	-	1
1	366024.0	50.2	12	1	1316.0	-	-	
2	573452.0	62.9	12	1	1520.0	-	-	
3	780619.0	64.7	12	1	1902.0	-	-	
4	132455.0	83.8	12	3	1410.0	1097.0	1621.0	
5	340207.0	65.4	12	1	1944.0	-	-	

6	548208.0	53.2	12	1	1024.0	-	-	
7	755333.0	51.7	12	1	1603.0	-	-	
8	107117.0	78.7	12	2	1804.0	1168.0	-	
9	314500.0	72.4	12	2	1030.0	1343.0	-	
10	522447.0	53.8	12	1	1327.0	-	-	
11	728517.0	73.6	12	2	1524.0	1553.0	-	
12	81611.0	66.7	12	2	1722.0	1122.0	-	
13	288948.0	82.5	12	2	1404.0	1019.0	-	

Statistics 16 (ChirpCenter Frequency: 5298 MHz)

Trial #	Burst Offset (us)	Pulse Width (µS)	Chirp (MHz)	Number of Pulses per Burst	PRI-1 (µS)	PRI-2 (µS)	PRI-3 (µS)	Detection (1:yes;0:no)
0	345766.0	87.6	20	3	1565.0	1055.0	1840.0	1
1	490019.0	85.2	20	3	1735.0	1541.0	1408.0	
2	39073.0	84.8	20	3	1534.0	1889.0	1463.0	
3	183923.0	77.9	20	2	1749.0	1460.0	-	
4	328777.0	76.5	20	2	1518.0	1485.0	-	
5	474728.0	60.9	20	1	1540.0	-	-	
6	21394.0	83.0	20	2	1080.0	1010.0	-	
7	165992.0	80.4	20	2	1824.0	1752.0	-	
8	310973.0	67.5	20	2	1764.0	1181.0	-	
9	456884.0	62.1	20	1	1495.0	-	-	
10	3515.0	86.4	20	3	1773.0	1966.0	1263.0	
11	147928.0	84.3	20	3	1593.0	1188.0	1788.0	
12	293225.0	76.9	20	2	1226.0	1537.0	-	
13	436922.0	95.8	20	3	1192.0	1298.0	1844.0	
14	584015.0	55.2	20	1	1644.0	-	-	
15	130832.0	59.0	20	1	1402.0	-	-	
16	274684.0	94.5	20	3	1296.0	1700.0	1283.0	
17	418579.0	91.9	20	3	1970.0	1978.0	1165.0	
18	563464.0	85.2	20	3	1732.0	1551.0	1189.0	
19	112787.0	69.5	20	2	1038.0	1224.0	-	

Statistics 17 (ChirpCenter Frequency: 5294 MHz)

Trial #	Burst Offset (us)	Pulse Width (µS)	Chirp (MHz)	Number of Pulses per Burst	PRI-1 (µS)	PRI-2 (µS)	PRI-3 (µS)	Detection (1:yes;0:no)
0	429224.0	86.4	10	3	1259.0	1918.0	1455.0	1
1	670241.0	92.2	10	3	1598.0	1719.0	1895.0	
2	912880.0	80.4	10	2	1816.0	1899.0	-	
3	158603.0	54.3	10	1	1335.0	-	-	
4	400824.0	53.1	10	1	1303.0	-	-	
5	641915.0	69.4	10	2	1503.0	1546.0	-	
6	883823.0	69.1	10	2	1279.0	1639.0	-	
7	128373.0	100.0	10	3	1375.0	1438.0	1595.0	
8	370379.0	79.6	10	2	1239.0	1705.0	-	
9	611194.0	88.4	10	3	1374.0	1579.0	1623.0	
10	855665.0	53.3	10	1	1016.0	-	-	
11	98897.0	65.3	10	1	1709.0	-	-	

Statistics 18 (ChirpCenter Frequency: 5294.8 MHz)

Trial #	Burst Offset (us)	Pulse Width (µS)	Chirp (MHz)	Number of Pulses per Burst	PRI-1 (µS)	PRI-2 (µS)	PRI-3 (µS)	Detection (1:yes;0:no)
0	292143.0	55.3	12	1	1920.0	-	-	1
1	499633.0	58.3	12	1	1797.0	-	-	
2	706377.0	72.3	12	2	1610.0	1039.0	-	
3	58989.0	84.8	12	3	1131.0	1761.0	1721.0	
4	266161.0	82.5	12	2	1875.0	1431.0	-	
5	474469.0	63.3	12	1	1095.0	-	-	
6	680544.0	80.0	12	2	1119.0	1913.0	-	
7	33519.0	90.3	12	3	1660.0	1853.0	1123.0	
8	240319.0	91.1	12	3	1539.0	1783.0	1172.0	
9	447400.0	96.6	12	3	1525.0	1036.0	1385.0	
10	654516.0	82.7	12	2	1710.0	1990.0	-	
11	8083.0	50.7	12	1	1234.0	-	-	
12	215435.0	78.4	12	2	1047.0	1109.0	-	
13	421325.0	99.5	12	3	1299.0	1965.0	1869.0	

Statistics 19 (ChirpCenter Frequency: 5294 MHz)

Trial #	Burst Offset (us)	Pulse Width (µS)	Chirp (MHz)	Number of Pulses per Burst	PRI-1 (µS)	PRI-2 (µS)	PRI-3 (µS)	Detection (1:yes;0:no)
0	733725.0	88.6	10	3	1501.0	1067.0	1927.0	1
1	977882.0	57.4	10	1	1723.0	-	-	
2	221197.0	96.6	10	3	1086.0	1658.0	1324.0	
3	462915.0	69.7	10	2	1751.0	1945.0	-	
4	705071.0	77.9	10	2	1642.0	1317.0	-	
5	947923.0	62.0	10	1	1866.0	-	-	
6	191373.0	88.4	10	3	1997.0	1077.0	1366.0	
7	432561.0	97.3	10	3	1790.0	1896.0	1367.0	
8	674004.0	96.2	10	3	1391.0	1787.0	1672.0	
9	915842.0	95.4	10	3	1020.0	1892.0	1414.0	
10	162176.0	54.8	10	1	1084.0	-	-	
11	403553.0	80.4	10	2	1850.0	1436.0	-	

Radar Type 5 Case3 Statistical Performance

Statistics 20 (ChirpCenter Frequency:5324MHz)

Trial #	Burst Offset (us)	Pulse Width (µS)	Chirp (MHz)	Number of Pulses per Burst	PRI-1 (µS)	PRI-2 (µS)	PRI-3 (µS)	Detection (1:yes;0:no)
0	483470.0	74.7	15	2	1619.0	1611.0	-	1
1	666072.0	57.1	15	1	1560.0	-	-	
2	98810.0	91.9	15	3	1392.0	1475.0	1276.0	
3	279914.0	83.1	15	2	1809.0	1772.0	-	
4	462536.0	50.7	15	1	1003.0	-	-	
5	642324.0	79.2	15	2	1574.0	1600.0	-	
6	76831.0	58.7	15	1	1186.0	-	-	
7	257785.0	71.0	15	2	1521.0	1567.0	-	
8	438554.0	79.0	15	2	1777.0	1960.0	-	
9	620397.0	68.5	15	2	1284.0	1428.0	-	
10	54310.0	73.5	15	2	1904.0	1352.0	-	

11	235506.0	70.5	15	2	1864.0	1115.0	-	
12	417036.0	76.6	15	2	1045.0	1300.0	-	
13	597974.0	81.2	15	2	1160.0	1675.0	-	
14	32086.0	61.8	15	1	1277.0	-	-	
15	212751.0	94.9	15	3	1450.0	1206.0	1860.0	

Statistics 21 (ChirpCenter Frequency: 5326.4 MHz)

Trial #	Burst Offset (us)	Pulse Width (µS)	Chirp (MHz)	Number of Pulses per Burst	PRI-1 (µS)	PRI-2 (µS)	PRI-3 (µS)	Detection (1:yes;0:no)
0	526149.0	78.5	9	2	1653.0	1698.0	-	1
1	767135.0	89.8	9	3	1174.0	1962.0	1167.0	
2	12955.0	59.4	9	1	1982.0	-	-	
3	254612.0	79.6	9	2	1633.0	1890.0	-	
4	496588.0	76.0	9	2	1112.0	1811.0	-	
5	739728.0	53.6	9	1	1144.0	-	-	
6	980872.0	80.9	9	2	1220.0	1053.0	-	
7	225249.0	61.6	9	1	1724.0	-	-	
8	467279.0	53.4	9	1	1901.0	-	-	
9	709720.0	59.9	9	1	1379.0	-	-	
10	951847.0	60.4	9	1	1453.0	-	-	
11	194839.0	91.4	9	3	1768.0	1726.0	1227.0	

Statistics 22 (ChirpCenter Frequency: 5322MHz)

Trial #	Burst Offset (us)	Pulse Width (µS)	Chirp (MHz)	Number of Pulses per Burst	PRI-1 (µS)	PRI-2 (µS)	PRI-3 (µS)	Detection (1:yes;0:no)
0	261858.0	77.0	20	2	1191.0	1363.0	-	1
1	407646.0	58.1	20	1	1248.0	-	-	
2	552319.0	62.1	20	1	1836.0	-	-	
3	99107.0	76.9	20	2	1334.0	1236.0	-	
4	243514.0	80.0	20	2	1914.0	1852.0	-	
5	389464.0	52.0	20	1	1701.0	-	-	
6	531093.0	88.6	20	3	1693.0	1995.0	1905.0	
7	81159.0	72.9	20	2	1922.0	1387.0	-	
8	225245.0	98.5	20	3	1839.0	1746.0	1389.0	
9	371906.0	57.9	20	1	1193.0	-	-	
10	514197.0	95.9	20	3	1659.0	1870.0	1066.0	
11	63561.0	53.5	20	1	1162.0	-	-	
12	207510.0	92.0	20	3	1745.0	1654.0	1458.0	
13	353638.0	57.3	20	1	1834.0	-	-	
14	497515.0	70.5	20	2	1684.0	1586.0	-	
15	45553.0	70.0	20	2	1042.0	1664.0	-	
16	189821.0	84.0	20	3	1765.0	1630.0	1176.0	
17	335330.0	76.1	20	2	1557.0	1057.0	-	
18	478825.0	93.2	20	3	1985.0	1018.0	1340.0	
19	27594.0	96.8	20	3	1760.0	1614.0	1817.0	

Statistics 23 (ChirpCenter Frequency:5325.2MHz)

Trial #	Burst Offset(us)	Pulse Width (µS)	Chirp (MHz)	Number of Pulses	PRI-1 (µS)	PRI-2 (µS)	PRI-3 (µS)	Detection (1:yes;0:no)

				per Burst				
0	247117.0	50.1	12	1	1841.0	-	-	1
1	453362.0	93.5	12	3	1590.0	1081.0	1413.0	
2	660875.0	68.8	12	2	1707.0	1577.0	-	
3	14140.0	56.3	12	1	1056.0	-	-	
4	220734.0	86.0	12	3	1953.0	1108.0	1987.0	
5	428367.0	75.2	12	2	1572.0	1536.0	-	
6	636681.0	54.4	12	1	1517.0	-	-	
7	843157.0	71.1	12	2	1329.0	1243.0	-	
8	195585.0	76.2	12	2	1940.0	1770.0	-	
9	403231.0	80.2	12	2	1098.0	1209.0	-	
10	610202.0	79.7	12	2	1588.0	1214.0	-	
11	815229.0	90.9	12	3	1615.0	1862.0	1601.0	
12	170267.0	68.7	12	2	1377.0	1441.0	-	
13	377306.0	67.4	12	2	1872.0	1313.0	-	

Statistics 24 (ChirpCenter Frequency: 5325.6 MHz)

Trial #	Burst Offset (us)	Pulse Width (µS)	Chirp (MHz)	Number of Pulses per Burst	PRI-1 (µS)	PRI-2 (µS)	PRI-3 (µS)	Detection (1:yes;0:no)
0	628071.0	94.0	11	3	1643.0	1748.0	1941.0	1
1	853391.0	70.8	11	2	1177.0	1201.0	-	
2	156223.0	56.3	11	1	1006.0	-	-	
3	378734.0	96.7	11	3	1230.0	1163.0	1332.0	
4	601331.0	90.6	11	3	1217.0	1582.0	1498.0	
5	825462.0	74.5	11	2	1569.0	1281.0	-	
6	128265.0	92.6	11	3	1065.0	1669.0	1222.0	
7	351161.0	89.0	11	3	1493.0	1135.0	1380.0	
8	573425.0	96.5	11	3	1607.0	1822.0	1602.0	
9	798431.0	70.5	11	2	1141.0	1178.0	-	
10	100737.0	94.0	11	3	1009.0	1629.0	1956.0	
11	324661.0	55.8	11	1	1290.0	-	-	
12	546278.0	87.7	11	3	1435.0	1963.0	1164.0	

Statistics 25 (ChirpCenter Frequency: 5328 MHz)

Trial #	Burst Offset (us)	Pulse Width (µS)	Chirp (MHz)	Number of Pulses per Burst	PRI-1 (µS)	PRI-2 (µS)	PRI-3 (µS)	Detection (1:yes;0:no)
0	1253842.0	68.6	5	2	1306.0	1161.0	-	1
1	119486.0	83.1	5	2	1420.0	1315.0	-	
2	482958.0	60.9	5	1	1687.0	-	-	
3	845641.0	77.7	5	2	1776.0	1158.0	-	
4	1208428.0	77.4	5	2	1793.0	1510.0	-	
5	74748.0	66.8	5	2	1576.0	1323.0	-	
6	438300.0	63.7	5	1	1333.0	-	-	
7	800152.0	91.2	5	3	1409.0	1681.0	1275.0	

Statistics 26 (ChirpCenter Frequency: 5323.6 MHz)

Trial #	Burst Offset (us)	Pulse Width (µS)	Chirp (MHz)	Number of Pulses per Burst	PRI-1 (µS)	PRI-2 (µS)	PRI-3 (µS)	Detection (1:yes;0:no)

0	545865.0	83.6	16	3	1632.0	1195.0	1000.0	1
1	14067.0	89.4	16	3	1173.0	1627.0	1656.0	
2	184953.0	55.8	16	1	1532.0	-	-	
3	353759.0	90.9	16	3	1981.0	1554.0	1998.0	
4	526388.0	54.7	16	1	1825.0	-	-	
5	694806.0	97.7	16	3	1734.0	1202.0	1250.0	
6	163568.0	67.5	16	2	1571.0	1434.0	-	
7	333410.0	96.7	16	3	1589.0	1469.0	1268.0	
8	504006.0	68.3	16	2	1750.0	1954.0	-	
9	675297.0	78.3	16	2	1591.0	1082.0	-	
10	142890.0	55.0	16	1	1427.0	-	-	
11	312479.0	84.9	16	3	1129.0	1936.0	1199.0	
12	482953.0	74.6	16	2	1959.0	1856.0	-	
13	655022.0	63.3	16	1	1885.0	-	-	
14	121457.0	99.8	16	3	1035.0	1515.0	1120.0	
15	292606.0	63.6	16	1	1647.0	-	-	
16	461322.0	87.3	16	3	1931.0	1051.0	1831.0	

Statistics 27 (ChirpCenter Frequency: 5322.4 MHz)

Trial #	Burst Offset (us)	Pulse Width (µS)	Chirp (MHz)	Number of Pulses per Burst	PRI-1 (µS)	PRI-2 (µS)	PRI-3 (µS)	Detection (1:yes;0:no)
0	565136.0	85.6	19	3	1946.0	1078.0	1015.0	1
1	89970.0	68.6	19	2	1029.0	1780.0	-	
2	243121.0	54.2	19	1	1111.0	-	-	
3	396034.0	61.2	19	1	1104.0	-	-	
4	546225.0	97.1	19	3	1157.0	1969.0	1100.0	
5	70998.0	98.3	19	3	1142.0	1699.0	1622.0	
6	224093.0	62.4	19	1	1655.0	-	-	
7	376127.0	80.2	19	2	1126.0	1769.0	-	
8	527806.0	87.5	19	3	1216.0	1448.0	1179.0	
9	52247.0	85.8	19	3	1847.0	1348.0	1472.0	
10	204582.0	88.1	19	3	1023.0	1124.0	1631.0	
11	357941.0	65.3	19	1	1848.0	-	-	
12	510977.0	52.5	19	1	1470.0	-	-	
13	33698.0	52.3	19	1	1312.0	-	-	
14	186023.0	74.1	19	2	1915.0	1200.0	-	
15	339327.0	54.9	19	1	1479.0	-	-	
16	491053.0	76.2	19	2	1376.0	1502.0	-	
17	14858.0	60.4	19	1	1758.0	-	-	
18	167387.0	81.5	19	2	1491.0	1103.0	-	

Statistics 28 (ChirpCenter Frequency: 5326 MHz)

Trial #	Burst Offset (us)	Pulse Width (µS)	Chirp (MHz)	Number of Pulses per Burst	PRI-1 (µS)	Pulse 2-3 Spacing (µS)	Pulse Start (mS)	Detection (1:yes;0:no)
0	507709.0	50.5	10	1	1857.0	-	-	1
1	750249.0	55.7	10	1	1246.0	-	-	
2	989003.0	85.8	10	3	1774.0	1002.0	1967.0	
3	235634.0	76.9	10	2	1125.0	1474.0	-	
4	477675.0	75.1	10	2	1254.0	1052.0	-	
5	718312.0	92.3	10	3	1180.0	1486.0	1492.0	

6	960895.0	78.1	10	2	1301.0	1757.0	-	
7	205370.0	92.2	10	3	1898.0	1252.0	1713.0	
8	446940.0	89.0	10	3	1260.0	1706.0	1411.0	
9	689225.0	70.9	10	2	1578.0	1620.0	-	
10	932305.0	63.1	10	1	1782.0	-	-	
11	176231.0	55.3	10	1	1522.0	-	-	

Statistics 29 (ChirpCenter Frequency: 5323.2 MHz)

Trial #	Burst Offset (us)	Pulse Width (µS)	Chirp (MHz)	Number of Pulses per Burst	PRI-1 (µS)	Pulse 2-3 Spacing (µS)	Pulse Start (mS)	Detection (1:yes;0:no)
0	437880.0	97.3	17	3	1319.0	1826.0	1635.0	1
1	598445.0	90.4	17	3	1079.0	1986.0	1674.0	
2	97088.0	91.8	17	3	1563.0	1151.0	1802.0	
3	257251.0	98.2	17	3	1876.0	1977.0	1766.0	
4	419893.0	59.5	17	1	1952.0	-	-	
5	580724.0	80.0	17	2	1253.0	1137.0	-	
6	77366.0	86.5	17	3	1054.0	1128.0	1828.0	
7	238032.0	91.1	17	3	1105.0	1599.0	1442.0	
8	398605.0	93.5	17	3	1867.0	1373.0	1087.0	
9	562025.0	60.7	17	1	1033.0	-	-	
10	57684.0	67.2	17	2	1288.0	1405.0	-	
11	219083.0	61.8	17	1	1585.0	-	-	
12	379234.0	79.4	17	2	1933.0	1667.0	-	
13	540896.0	81.4	17	2	1096.0	1464.0	-	
14	37916.0	65.7	17	1	1496.0	-	-	
15	198794.0	76.0	17	2	1733.0	1255.0	-	
16	359754.0	81.0	17	2	1326.0	1668.0	-	
17	437880.0	97.3	17	3	1319.0	1826.0	1635.0	

11AC80MIMO-5290MHz:

Radar Type 5 Case1 Statistical Performance

Statistics 0 (ChirpCenter Frequency: 5290 MHz)

Trial #	Burst Offset (us)	Pulse Width (µS)	Chirp (MHz)	Number of Pulses per Burst	PRI-1 (µS)	PRI-2 (µS)	PRI-3 (µS)	Detection (1:yes;0:no)
0	636185.0	77.8	13	2	1665.0	1477.0	-	1
1	32674.0	51.9	13	1	1074.0	-	-	
2	226294.0	63.8	13	1	1584.0	-	-	
3	417976.0	96.6	13	3	1682.0	1786.0	1843.0	
4	611152.0	85.9	13	3	1795.0	1215.0	1729.0	
5	8789.0	73.7	13	2	1198.0	1549.0	-	
6	201917.0	77.2	13	2	1837.0	1819.0	-	
7	395530.0	68.4	13	2	1587.0	1114.0	-	
8	588564.0	76.7	13	2	2000.0	1155.0	-	
9	783794.0	53.2	13	1	1147.0	-	-	
10	177933.0	85.7	13	3	1433.0	1695.0	1394.0	
11	370624.0	94.3	13	3	1670.0	1426.0	1935.0	
12	564893.0	77.6	13	2	1294.0	1671.0	-	
13	759583.0	65.7	13	1	1512.0	-	-	
14	154262.0	93.5	13	3	1444.0	1130.0	1468.0	

Statistics 1 (ChirpCenter Frequency: 5290 MHz)

Trial #	Burst Offset (us)	Pulse Width (µS)	Chirp (MHz)	Number of Pulses per Burst	PRI-1 (µS)	PRI-2 (µS)	PRI-3 (µS)	Detection (1:yes;0:no)
0	653020.0	75.0	5	2	1880.0	1527.0	-	1
1	1015643.0	99.4	5	3	1401.0	1262.0	1257.0	
2	1379398.0	67.4	5	2	1531.0	1403.0	-	
3	245489.0	73.6	5	2	1449.0	1041.0	-	
4	609113.0	65.9	5	1	1432.0	-	-	
5	970852.0	83.8	5	3	1356.0	1292.0	1419.0	
6	1335913.0	65.5	5	1	1543.0	-	-	
7	200406.0	98.6	5	3	1548.0	1796.0	1728.0	

Statistics 2 (ChirpCenter Frequency: 5290 MHz)

Trial #	Burst Offset (us)	Pulse Width (µS)	Chirp (MHz)	Number of Pulses per Burst	PRI-1 (µS)	PRI-2 (µS)	PRI-3 (µS)	Detection (1:yes;0:no)
0	409565.0	73.8	9	2	1806.0	1538.0	-	1
1	673692.0	69.5	9	2	1117.0	1649.0	-	
2	938562.0	51.9	9	1	1651.0	-	-	
3	113209.0	84.6	9	3	1976.0	1032.0	1271.0	
4	376726.0	95.4	9	3	1060.0	1903.0	1388.0	
5	641212.0	68.0	9	2	1368.0	1351.0	-	
6	903714.0	89.6	9	3	1338.0	1514.0	1573.0	
7	80863.0	81.9	9	2	1022.0	1689.0	-	
8	344067.0	88.3	9	3	1810.0	1330.0	1838.0	
9	609331.0	53.7	9	1	1597.0	-	-	
10	871542.0	91.3	9	3	1961.0	1106.0	1001.0	

Statistics 3 (ChirpCenter Frequency: 5290 MHz)

Trial #	Burst Offset (us)	Pulse Width (µS)	Chirp (MHz)	Number of Pulses per Burst	PRI-1 (µS)	PRI-2 (µS)	PRI-3 (µS)	Detection (1:yes;0:no)
0	26541.0	68.1	19	2	1339.0	1355.0	-	1
1	171821.0	58.7	19	1	1251.0	-	-	
2	316229.0	75.3	19	2	1136.0	1640.0	-	
3	461864.0	56.4	19	1	1753.0	-	-	
4	8677.0	99.7	19	3	1196.0	1708.0	1159.0	
5	153995.0	57.7	19	1	1013.0	-	-	
6	299238.0	59.5	19	1	1072.0	-	-	
7	443177.0	80.0	19	2	1482.0	1369.0	-	
8	587671.0	82.0	19	2	1993.0	1197.0	-	
9	135674.0	82.8	19	2	1883.0	1005.0	-	
10	279928.0	88.0	19	3	1061.0	1928.0	1101.0	
11	424279.0	93.2	19	3	1207.0	1907.0	1223.0	
12	570132.0	70.4	19	2	1526.0	1360.0	-	
13 14	117439.0	95.3	19	3	1171.0	1955.0	1775.0	
15	262502.0	81.9	19	2	1690.0	1545.0	-	
16	406573.0	98.5	19	3	1975.0	1169.0	1062.0	
17	553328.0	65.0	19	1	1767.0	-	-	

18	99799.0	85.4	19	3	1011.0	1637.0	1425.0	
19	244095.0	91.6	19	3	1878.0	1445.0	1325.0	

Statistics 4 (ChirpCenter Frequency: 5290 MHz)

Trial #	Burst Offset (us)	Pulse Width (µS)	Chirp (MHz)	Number of Pulses per Burst	PRI-1 (µS)	PRI-2 (µS)	PRI-3 (µS)	Detection (1:yes;0:no)
0	629614.0	67.9	16	2	1320.0	1133.0	-	1
1	96856.0	62.3	16	1	1957.0	-	-	
2	267719.0	53.3	16	1	1592.0	-	-	
3	436784.0	90.0	16	3	1900.0	1153.0	1346.0	
4	608289.0	77.1	16	2	1166.0	1646.0	-	
5	75610.0	83.9	16	3	1278.0	1232.0	1459.0	
6	245638.0	89.1	16	3	1240.0	1384.0	1939.0	
7	416355.0	81.8	16	2	1833.0	1676.0	-	
8	588736.0	50.3	16	1	1075.0	-	-	
9	54571.0	87.1	16	3	1116.0	1996.0	1756.0	
10	225175.0	71.3	16	2	1225.0	1815.0	-	
11	394825.0	97.5	16	3	1884.0	1465.0	1132.0	
12	565361.0	90.6	16	3	1561.0	1040.0	1354.0	
13	33643.0	86.3	16	3	1596.0	1183.0	1792.0	
14	203957.0	97.6	16	3	1365.0	1073.0	1361.0	
15	373812.0	84.7	16	3	1021.0	1718.0	1854.0	
16	544060.0	99.7	16	3	1150.0	1244.0	1988.0	

Statistics 5 (ChirpCenter Frequency: 5290 MHz)

Trial #	Burst Offset (us)	Pulse Width (µS)	Chirp (MHz)	Number of Pulses per Burst	PRI-1 (µS)	PRI-2 (µS)	PRI-3 (µS)	Detection (1:yes;0:no)
0	15438.0	92.9	12	3	1085.0	1564.0	1407.0	1
1	222486.0	67.7	12	2	1744.0	1747.0	-	
2	430731.0	65.8	12	1	1092.0	-	-	
3	637784.0	56.3	12	1	1851.0	-	-	
4	845342.0	53.7	12	1	1727.0	-	-	
5	196720.0	83.5	12	3	1679.0	1930.0	1025.0	
6	404955.0	65.8	12	1	1519.0	-	-	
7	610711.0	85.9	12	3	1134.0	1034.0	1808.0	
8	818057.0	76.3	12	2	1606.0	1926.0	-	
9	171459.0	81.5	12	2	1891.0	1714.0	-	
10	377969.0	89.4	12	3	1310.0	1594.0	1827.0	
11	586875.0	63.4	12	1	1568.0	-	-	
12	792834.0	69.6	12	2	1307.0	1925.0	-	
13	146044.0	74.5	12	2	1264.0	1846.0	-	

Statistics 6 (ChirpCenter Frequency: 5290 MHz)

Trial #	Burst Offset (us)	Pulse Width (µS)	Chirp (MHz)	Number of Pulses per Burst	PRI-1 (µS)	PRI-2 (µS)	PRI-3 (µS)	Detection (1:yes;0:no)
0	329022.0	96.6	13	3	1182.0	1609.0	1581.0	1
1	521718.0	96.7	13	3	1829.0	1799.0	1154.0	
2	714222.0	86.5	13	3	1923.0	1396.0	1865.0	
3	112450.0	73.3	13	2	1908.0	1318.0	-	
4	306283.0	55.8	13	1	1688.0	-	-	
5	500239.0	55.4	13	1	1145.0	-	-	
6	690932.0	85.3	13	3	1336.0	1504.0	1820.0	
7	88645.0	79.4	13	2	1344.0	1893.0	-	

8	282508.0	65.7	13	1	1476.0	-	-	
9	475842.0	68.6	13	2	1008.0	1028.0	-	
10	667887.0	77.7	13	2	1972.0	1835.0	-	
11	64845.0	79.6	13	2	1882.0	1331.0	-	
12	257755.0	94.9	13	3	1830.0	1070.0	1349.0	
13	452335.0	61.4	13	1	1451.0	-	-	
14	643395.0	90.6	13	3	1233.0	1562.0	1887.0	
15	329022.0	96.6	13	3	1182.0	1609.0	1581.0	

Statistics 7 (ChirpCenter Frequency: 5290 MHz)

Trial #	Burst Offset (us)	Pulse Width (µS)	Chirp (MHz)	Number of Pulses per Burst	PRI-1 (µS)	PRI-2 (µS)	PRI-3 (µS)	Detection (1:yes;0:no)
0	51446.0	52.6	10	1	1210.0	-	-	1
1	292696.0	84.1	10	3	1314.0	1725.0	1529.0	
2	533989.0	97.7	10	3	1139.0	1868.0	1805.0	
3	775564.0	97.3	10	3	1341.0	1446.0	1755.0	
4	21542.0	98.8	10	3	1544.0	1386.0	1302.0	
5	263385.0	72.2	10	2	1771.0	1184.0	-	
6	505581.0	67.6	10	2	1175.0	1027.0	-	
7	747058.0	75.7	10	2	1026.0	1871.0	-	
8	989976.0	60.9	10	1	1798.0	-	-	
9	234024.0	64.2	10	1	1138.0	-	-	
10	475207.0	78.8	10	2	1784.0	1604.0	-	
11	715825.0	87.5	10	3	1511.0	1712.0	1683.0	

Statistics 8 (ChirpCenter Frequency: 5290 MHz)

Trial #	Burst Offset (us)	Pulse Width (µS)	Chirp (MHz)	Number of Pulses per Burst	PRI-1 (µS)	PRI-2 (µS)	PRI-3 (µS)	Detection (1:yes;0:no)
0	823112.0	54.1	13	1	1415.0	-	-	1
1	174965.0	50.7	13	1	1221.0	-	-	
2	382216.0	52.3	13	1	1974.0	-	-	
3	587395.0	99.8	13	3	1558.0	1696.0	1949.0	
4	796897.0	68.4	13	2	1014.0	1099.0	-	
5	149042.0	80.8	13	2	1736.0	1505.0	-	
6	356750.0	62.5	13	1	1778.0	-	-	
7	563824.0	74.8	13	2	1149.0	1204.0	-	
8	772314.0	50.8	13	1	1049.0	-	-	
9	123796.0	54.0	13	1	1417.0	-	-	
10	331215.0	63.0	13	1	1730.0	-	-	
11	537402.0	91.8	13	3	1143.0	1270.0	1347.0	
12	744805.0	79.3	13	2	1274.0	1992.0	-	
13	98172.0	64.3	13	1	1937.0	-	-	

Statistics 9 (ChirpCenter Frequency: 5290 MHz)

Trial #	Burst Offset (us)	Pulse Width (µS)	Chirp (MHz)	Number of Pulses per Burst	PRI-1 (µS)	PRI-2 (µS)	PRI-3 (µS)	Detection (1:yes;0:no)
0	535615.0	63.4	6	1	1043.0	-	-	1
1	898668.0	52.0	6	1	1863.0	-	-	
2	1259235.0	97.2	6	3	1973.0	1605.0	1583.0	

3	127106.0	78.7	6	2	1466.0	1743.0	-	
4	490358.0	74.2	6	2	1280.0	1219.0	-	
5	852409.0	88.7	6	3	1293.0	1934.0	1273.0	
6	1217152.0	54.3	6	1	1991.0	-	-	
7	82296.0	95.4	6	3	1580.0	1555.0	1791.0	

Radar Type 5 Case2 Statistical Performance

Statistics 10 (ChirpCenter Frequency: 5256.4 MHz)

Trial #	Burst Offset (us)	Pulse Width (µS)	Chirp (MHz)	Number of Pulses per Burst	PRI-1 (µS)	PRI-2 (µS)	PRI-3 (µS)	Detection (1:yes;0:no)
0	209249.0	73.7	16	2	1208.0	1497.0	-	0
1	378386.0	97.4	16	3	1942.0	1754.0	1613.0	
2	548411.0	91.7	16	3	1999.0	1702.0	1462.0	
3	17733.0	66.2	16	1	1393.0	-	-	
4	187952.0	70.8	16	2	1968.0	1821.0	-	
5	359277.0	52.3	16	1	1740.0	-	-	
6	528886.0	78.9	16	2	1308.0	1984.0	-	
7	700166.0	70.9	16	2	1050.0	1358.0	-	
8	167197.0	75.6	16	2	1437.0	1430.0	-	
9	338262.0	59.1	16	1	1697.0	-	-	
10	508324.0	77.0	16	2	1397.0	1304.0	-	
11	678689.0	67.9	16	2	1803.0	1083.0	-	
12	146031.0	81.2	16	2	1720.0	1932.0	-	
13	316923.0	78.7	16	2	1247.0	1121.0	-	
14	488056.0	63.3	16	1	1634.0	-	-	
15	657326.0	68.9	16	2	1849.0	1423.0	-	
16	125509.0	59.3	16	1	1093.0	-	-	

Statistics 11 (ChirpCenter Frequency: 5257.6MHz)

Trial #	Burst Offset (us)	Pulse Width (µS)	Chirp (MHz)	Number of Pulses per Burst	PRI-1 (µS)	PRI-2 (µS)	PRI-3 (µS)	Detection (1:yes;0:no)
0	263736.0	98.9	19	3	1381.0	1680.0	1488.0	1
1	416459.0	82.3	19	2	1716.0	1855.0	-	
2	567902.0	86.7	19	3	1211.0	1400.0	1919.0	
3	92979.0	89.7	19	3	1861.0	1068.0	1282.0	
4	245155.0	98.6	19	3	1507.0	1194.0	1461.0	
5	397609.0	71.1	19	2	1921.0	1789.0	-	
6	551431.0	55.9	19	1	1947.0	-	-	
7	74413.0	67.9	19	2	1350.0	1372.0	-	
8	226559.0	84.4	19	3	1203.0	1107.0	1443.0	
9	380056.0	58.8	19	1	1715.0	-	-	
10	533408.0	65.6	19	1	1017.0	-	-	
11	55547.0	78.5	19	2	1911.0	1704.0	-	
12	207876.0	82.3	19	2	1845.0	1686.0	-	
13	359771.0	90.1	19	3	1938.0	1071.0	1266.0	
14	511297.0	90.2	19	3	1989.0	1089.0	1950.0	
15	36803.0	83.1	19	2	1943.0	1406.0	-	
16	189652.0	58.8	19	1	1742.0	-	-	
17	341809.0	77.0	19	2	1187.0	1657.0	-	
18	495737.0	55.0	19	1	1012.0	-	-	

Statistics 12 (ChirpCenter Frequency: 5255.2MHz)

Trial #	Burst Offset	Pulse Width	Chirp (MHz)	Number of Pulses per	PRI-1 (µS)	PRI-2 (µS)	PRI-3 (µS)	Detection (1:yes;0:no)

	(us)	(µS)		Burst				
0	22911.0	58.1	13	1	1929.0	-	-	1
1	216473.0	52.1	13	1	1910.0	-	-	
2	410004.0	59.9	13	1	1971.0	-	-	
3	603671.0	60.2	13	1	1812.0	-	-	
4	794160.0	95.9	13	3	1399.0	1906.0	1608.0	
5	192251.0	79.9	13	2	1626.0	1859.0	-	
6	385590.0	78.5	13	2	1238.0	1917.0	-	
7	579862.0	53.8	13	1	1763.0	-	-	
8	773423.0	64.7	13	1	1800.0	-	-	
9	168898.0	61.4	13	1	1390.0	-	-	
10	361606.0	83.2	13	2	1692.0	1858.0	-	
11	553866.0	84.7	13	3	1533.0	1677.0	1638.0	
12	747241.0	88.7	13	3	1703.0	1528.0	1058.0	
13	144710.0	78.3	13	2	1258.0	1951.0	-	
14	337856.0	69.3	13	2	1731.0	1717.0	-	

Statistics 13 (ChirpCenter Frequency: 5254MHz)

Trial #	Burst Offset (us)	Pulse Width (µS)	Chirp (MHz)	Number of Pulses per Burst	PRI-1 (µS)	PRI-2 (µS)	PRI-3 (µS)	Detection (1:yes;0:no)
0	664275.0	75.3	10	2	1994.0	1612.0	-	1
1	907886.0	56.3	10	1	1456.0	-	-	
2	151316.0	67.7	10	2	1617.0	1185.0	-	
3	393746.0	55.6	10	1	1337.0	-	-	
4	635093.0	75.2	10	2	1421.0	1267.0	-	
5	876993.0	76.3	10	2	1359.0	1305.0	-	
6	121278.0	85.7	10	3	1547.0	1362.0	1924.0	
7	362696.0	98.4	10	3	1873.0	1550.0	1249.0	
8	604342.0	86.4	10	3	1779.0	1439.0	1046.0	
9	846453.0	93.6	10	3	1059.0	1031.0	1452.0	
10	91871.0	63.3	10	1	1328.0	-	-	
11	333050.0	92.4	10	3	1412.0	1673.0	1322.0	

Statistics14 (ChirpCenter Frequency: 5257.2 MHz)

Trial #	Burst Offset (us)	Pulse Width (µS)	Chirp (MHz)	Number of Pulses per Burst	PRI-1 (µS)	PRI-2 (µS)	PRI-3 (µS)	Detection (1:yes;0:no)
0	361323.0	93.3	18	3	1983.0	1912.0	1535.0	1
1	515261.0	69.1	18	2	1102.0	1794.0	-	
2	39025.0	86.9	18	3	1044.0	1152.0	1148.0	
3	190900.0	84.9	18	3	1894.0	1948.0	1118.0	
4	343941.0	72.3	18	2	1094.0	1916.0	-	
5	497624.0	51.7	18	1	1447.0	-	-	
6	20319.0	58.3	18	1	1429.0	-	-	
7	172999.0	60.8	18	1	1979.0	-	-	
8	325872.0	57.1	18	1	1641.0	-	-	
9	475841.0	88.9	18	3	1886.0	1964.0	1489.0	
10	1489.0	72.0	18	2	1909.0	1297.0	-	
11	153647.0	90.9	18	3	1261.0	1566.0	1370.0	
12	307096.0	59.8	18	1	1552.0	-	-	
13	458804.0	70.0	18	2	1759.0	1291.0	-	

14	610798.0	67.2	18	2	1625.0	1881.0	-	
15	134759.0	91.2	18	3	1382.0	1832.0	1661.0	
16	288306.0	56.5	18	1	1483.0	-	-	
17	441296.0	51.2	18	1	1237.0	-	-	
18	592780.0	74.1	18	2	1471.0	1245.0	-	

Statistics 15 (ChirpCenter Frequency: 5254.8 MHz)

Trial #	Burst Offset (us)	Pulse Width (µS)	Chirp (MHz)	Number of Pulses per Burst	PRI-1 (µS)	PRI-2 (µS)	PRI-3 (µS)	Detection (1:yes;0:no)
0	158286.0	76.9	12	2	1110.0	1140.0	-	1
1	366024.0	50.2	12	1	1316.0	-	-	
2	573452.0	62.9	12	1	1520.0	-	-	
3	780619.0	64.7	12	1	1902.0	-	-	
4	132455.0	83.8	12	3	1410.0	1097.0	1621.0	
5	340207.0	65.4	12	1	1944.0	-	-	
6	548208.0	53.2	12	1	1024.0	-	-	
7	755333.0	51.7	12	1	1603.0	-	-	
8	107117.0	78.7	12	2	1804.0	1168.0	-	
9	314500.0	72.4	12	2	1030.0	1343.0	-	
10	522447.0	53.8	12	1	1327.0	-	-	
11	728517.0	73.6	12	2	1524.0	1553.0	-	
12	81611.0	66.7	12	2	1722.0	1122.0	-	
13	288948.0	82.5	12	2	1404.0	1019.0	-	

Statistics 16 (ChirpCenter Frequency: 5258 MHz)

Trial #	Burst Offset (us)	Pulse Width (µS)	Chirp (MHz)	Number of Pulses per Burst	PRI-1 (µS)	PRI-2 (µS)	PRI-3 (µS)	Detection (1:yes;0:no)
0	345766.0	87.6	20	3	1565.0	1055.0	1840.0	1
1	490019.0	85.2	20	3	1735.0	1541.0	1408.0	
2	39073.0	84.8	20	3	1534.0	1889.0	1463.0	
3	183923.0	77.9	20	2	1749.0	1460.0	-	
4	328777.0	76.5	20	2	1518.0	1485.0	-	
5	474728.0	60.9	20	1	1540.0	-	-	
6	21394.0	83.0	20	2	1080.0	1010.0	-	
7	165992.0	80.4	20	2	1824.0	1752.0	-	
8	310973.0	67.5	20	2	1764.0	1181.0	-	
9	456884.0	62.1	20	1	1495.0	-	-	
10	3515.0	86.4	20	3	1773.0	1966.0	1263.0	
11	147928.0	84.3	20	3	1593.0	1188.0	1788.0	
12	293225.0	76.9	20	2	1226.0	1537.0	-	
13	436922.0	95.8	20	3	1192.0	1298.0	1844.0	
14	584015.0	55.2	20	1	1644.0	-	-	
15	130832.0	59.0	20	1	1402.0	-	-	
16	274684.0	94.5	20	3	1296.0	1700.0	1283.0	
17	418579.0	91.9	20	3	1970.0	1978.0	1165.0	
18	563464.0	85.2	20	3	1732.0	1551.0	1189.0	
19	112787.0	69.5	20	2	1038.0	1224.0	-	

Statistics 17 (ChirpCenter Frequency: 5254 MHz)

Trial	Burst	Pulse	Chirp	Number	PRI-1	PRI-2	PRI-3	Detection

#	Offset (us)	Width (µS)	(MHz)	of Pulses per Burst	(µS)	(µS)	(µS)	(1:yes;0:no)
0	429224.0	86.4	10	3	1259.0	1918.0	1455.0	1
1	670241.0	92.2	10	3	1598.0	1719.0	1895.0	
2	912880.0	80.4	10	2	1816.0	1899.0	-	
3	158603.0	54.3	10	1	1335.0	-	-	
4	400824.0	53.1	10	1	1303.0	-	-	
5	641915.0	69.4	10	2	1503.0	1546.0	-	
6	883823.0	69.1	10	2	1279.0	1639.0	-	
7	128373.0	100.0	10	3	1375.0	1438.0	1595.0	
8	370379.0	79.6	10	2	1239.0	1705.0	-	
9	611194.0	88.4	10	3	1374.0	1579.0	1623.0	
10	855665.0	53.3	10	1	1016.0	-	-	
11	98897.0	65.3	10	1	1709.0	-	-	

Statistics 18 (ChirpCenter Frequency: 5254.8 MHz)

Trial #	Burst Offset (us)	Pulse Width (µS)	Chirp (MHz)	Number of Pulses per Burst	PRI-1 (µS)	PRI-2 (µS)	PRI-3 (µS)	Detection (1:yes;0:no)
0	292143.0	55.3	12	1	1920.0	-	-	1
1	499633.0	58.3	12	1	1797.0	-	-	
2	706377.0	72.3	12	2	1610.0	1039.0	-	
3	58989.0	84.8	12	3	1131.0	1761.0	1721.0	
4	266161.0	82.5	12	2	1875.0	1431.0	-	
5	474469.0	63.3	12	1	1095.0	-	-	
6	680544.0	80.0	12	2	1119.0	1913.0	-	
7	33519.0	90.3	12	3	1660.0	1853.0	1123.0	
8	240319.0	91.1	12	3	1539.0	1783.0	1172.0	
9	447400.0	96.6	12	3	1525.0	1036.0	1385.0	
10	654516.0	82.7	12	2	1710.0	1990.0	-	
11	8083.0	50.7	12	1	1234.0	-	-	
12	215435.0	78.4	12	2	1047.0	1109.0	-	
13	421325.0	99.5	12	3	1299.0	1965.0	1869.0	

Statistics 19 (ChirpCenter Frequency: 5254 MHz)

Trial #	Burst Offset (us)	Pulse Width (µS)	Chirp (MHz)	Number of Pulses per Burst	PRI-1 (µS)	PRI-2 (µS)	PRI-3 (µS)	Detection (1:yes;0:no)
0	733725.0	88.6	10	3	1501.0	1067.0	1927.0	1
1	977882.0	57.4	10	1	1723.0	-	-	
2	221197.0	96.6	10	3	1086.0	1658.0	1324.0	
3	462915.0	69.7	10	2	1751.0	1945.0	-	
4	705071.0	77.9	10	2	1642.0	1317.0	-	
5	947923.0	62.0	10	1	1866.0	-	-	
6	191373.0	88.4	10	3	1997.0	1077.0	1366.0	
7	432561.0	97.3	10	3	1790.0	1896.0	1367.0	
8	674004.0	96.2	10	3	1391.0	1787.0	1672.0	
9	915842.0	95.4	10	3	1020.0	1892.0	1414.0	
10	162176.0	54.8	10	1	1084.0	-	-	
11	403553.0	80.4	10	2	1850.0	1436.0	-	

Radar Type 5 Case3 Statistical Performance

Statistics 20 (ChirpCenter Frequency:5324MHz)

Trial #	Burst Offset (us)	Pulse Width (µS)	Chirp (MHz)	Number of Pulses per Burst	PRI-1 (µS)	PRI-2 (µS)	PRI-3 (µS)	Detection (1:yes;0:no)
0	483470.0	74.7	15	2	1619.0	1611.0	-	1
1	666072.0	57.1	15	1	1560.0	-	-	
2	98810.0	91.9	15	3	1392.0	1475.0	1276.0	
3	279914.0	83.1	15	2	1809.0	1772.0	-	
4	462536.0	50.7	15	1	1003.0	-	-	
5	642324.0	79.2	15	2	1574.0	1600.0	-	
6	76831.0	58.7	15	1	1186.0	-	-	
7	257785.0	71.0	15	2	1521.0	1567.0	-	
8	438554.0	79.0	15	2	1777.0	1960.0	-	
9	620397.0	68.5	15	2	1284.0	1428.0	-	
10	54310.0	73.5	15	2	1904.0	1352.0	-	
11	235506.0	70.5	15	2	1864.0	1115.0	-	
12	417036.0	76.6	15	2	1045.0	1300.0	-	
13	597974.0	81.2	15	2	1160.0	1675.0	-	
14	32086.0	61.8	15	1	1277.0	-	-	
15	212751.0	94.9	15	3	1450.0	1206.0	1860.0	

Statistics 21 (ChirpCenter Frequency: 5326.4 MHz)

Trial #	Burst Offset (us)	Pulse Width (µS)	Chirp (MHz)	Number of Pulses per Burst	PRI-1 (µS)	PRI-2 (µS)	PRI-3 (µS)	Detection (1:yes;0:no)
0	526149.0	78.5	9	2	1653.0	1698.0	-	1
1	767135.0	89.8	9	3	1174.0	1962.0	1167.0	
2	12955.0	59.4	9	1	1982.0	-	-	
3	254612.0	79.6	9	2	1633.0	1890.0	-	
4	496588.0	76.0	9	2	1112.0	1811.0	-	
5	739728.0	53.6	9	1	1144.0	-	-	
6	980872.0	80.9	9	2	1220.0	1053.0	-	
7	225249.0	61.6	9	1	1724.0	-	-	
8	467279.0	53.4	9	1	1901.0	-	-	
9	709720.0	59.9	9	1	1379.0	-	-	
10	951847.0	60.4	9	1	1453.0	-	-	
11	194839.0	91.4	9	3	1768.0	1726.0	1227.0	

Statistics 22 (ChirpCenter Frequency: 5322MHz)

Trial #	Burst Offset (us)	Pulse Width (µS)	Chirp (MHz)	Number of Pulses per Burst	PRI-1 (µS)	PRI-2 (µS)	PRI-3 (µS)	Detection (1:yes;0:no)
0	261858.0	77.0	20	2	1191.0	1363.0	-	1
1	407646.0	58.1	20	1	1248.0	-	-	
2	552319.0	62.1	20	1	1836.0	-	-	
3	99107.0	76.9	20	2	1334.0	1236.0	-	
4	243514.0	80.0	20	2	1914.0	1852.0	-	
5	389464.0	52.0	20	1	1701.0	-	-	
6	531093.0	88.6	20	3	1693.0	1995.0	1905.0	
7	81159.0	72.9	20	2	1922.0	1387.0	-	

8	225245.0	98.5	20	3	1839.0	1746.0	1389.0	
9	371906.0	57.9	20	1	1193.0	-	-	
10	514197.0	95.9	20	3	1659.0	1870.0	1066.0	
11	63561.0	53.5	20	1	1162.0	-	-	
12	207510.0	92.0	20	3	1745.0	1654.0	1458.0	
13	353638.0	57.3	20	1	1834.0	-	-	
14	497515.0	70.5	20	2	1684.0	1586.0	-	
15	45553.0	70.0	20	2	1042.0	1664.0	-	
16	189821.0	84.0	20	3	1765.0	1630.0	1176.0	
17	335330.0	76.1	20	2	1557.0	1057.0	-	
18	478825.0	93.2	20	3	1985.0	1018.0	1340.0	
19	27594.0	96.8	20	3	1760.0	1614.0	1817.0	

Statistics 23 (ChirpCenter Frequency:5325.2MHz)

Trial #	Burst Offset (us)	Pulse Width (µS)	Chirp (MHz)	Number of Pulses per Burst	PRI-1 (µS)	PRI-2 (µS)	PRI-3 (µS)	Detection (1:yes;0:no)
0	247117.0	50.1	12	1	1841.0	-	-	1
1	453362.0	93.5	12	3	1590.0	1081.0	1413.0	
2	660875.0	68.8	12	2	1707.0	1577.0	-	
3	14140.0	56.3	12	1	1056.0	-	-	
4	220734.0	86.0	12	3	1953.0	1108.0	1987.0	
5	428367.0	75.2	12	2	1572.0	1536.0	-	
6	636681.0	54.4	12	1	1517.0	-	-	
7	843157.0	71.1	12	2	1329.0	1243.0	-	
8	195585.0	76.2	12	2	1940.0	1770.0	-	
9	403231.0	80.2	12	2	1098.0	1209.0	-	
10	610202.0	79.7	12	2	1588.0	1214.0	-	
11	815229.0	90.9	12	3	1615.0	1862.0	1601.0	
12	170267.0	68.7	12	2	1377.0	1441.0	-	
13	377306.0	67.4	12	2	1872.0	1313.0	-	

Statistics 24 (ChirpCenter Frequency: 5325.6 MHz)

Trial #	Burst Offset (us)	Pulse Width (µS)	Chirp (MHz)	Number of Pulses per Burst	PRI-1 (µS)	PRI-2 (µS)	PRI-3 (µS)	Detection (1:yes;0:no)
0	628071.0	94.0	11	3	1643.0	1748.0	1941.0	0
1	853391.0	70.8	11	2	1177.0	1201.0	-	
2	156223.0	56.3	11	1	1006.0	-	-	
3	378734.0	96.7	11	3	1230.0	1163.0	1332.0	
4	601331.0	90.6	11	3	1217.0	1582.0	1498.0	
5	825462.0	74.5	11	2	1569.0	1281.0	-	
6	128265.0	92.6	11	3	1065.0	1669.0	1222.0	
7	351161.0	89.0	11	3	1493.0	1135.0	1380.0	
8	573425.0	96.5	11	3	1607.0	1822.0	1602.0	
9	798431.0	70.5	11	2	1141.0	1178.0	-	
10	100737.0	94.0	11	3	1009.0	1629.0	1956.0	
11	324661.0	55.8	11	1	1290.0	-	-	
12	546278.0	87.7	11	3	1435.0	1963.0	1164.0	

Statistics 25 (ChirpCenter Frequency: 5328 MHz)

Trial	Burst	Pulse	Chirp	Number of	PRI-1	PRI-2	PRI-3	Detection

#	Offset (us)	Width (µS)	(MHz)	Pulses per Burst	(µS)	(µS)	(µS)	(1:yes;0:no)
0	1253842.0	68.6	5	2	1306.0	1161.0	-	1
1	119486.0	83.1	5	2	1420.0	1315.0	-	
2	482958.0	60.9	5	1	1687.0	-	-	
3	845641.0	77.7	5	2	1776.0	1158.0	-	
4	1208428.0	77.4	5	2	1793.0	1510.0	-	
5	74748.0	66.8	5	2	1576.0	1323.0	-	
6	438300.0	63.7	5	1	1333.0	-	-	
7	800152.0	91.2	5	3	1409.0	1681.0	1275.0	

Statistics 26 (ChirpCenter Frequency: 5323.6 MHz)

Trial #	Burst Offset (us)	Pulse Width (µS)	Chirp (MHz)	Number of Pulses per Burst	PRI-1 (µS)	PRI-2 (µS)	PRI-3 (µS)	Detection (1:yes;0:no)
0	545865.0	83.6	16	3	1632.0	1195.0	1000.0	1
1	14067.0	89.4	16	3	1173.0	1627.0	1656.0	
2	184953.0	55.8	16	1	1532.0	-	-	
3	353759.0	90.9	16	3	1981.0	1554.0	1998.0	
4	526388.0	54.7	16	1	1825.0	-	-	
5	694806.0	97.7	16	3	1734.0	1202.0	1250.0	
6	163568.0	67.5	16	2	1571.0	1434.0	-	
7	333410.0	96.7	16	3	1589.0	1469.0	1268.0	
8	504006.0	68.3	16	2	1750.0	1954.0	-	
9	675297.0	78.3	16	2	1591.0	1082.0	-	
10	142890.0	55.0	16	1	1427.0	-	-	
11	312479.0	84.9	16	3	1129.0	1936.0	1199.0	
12	482953.0	74.6	16	2	1959.0	1856.0	-	
13	655022.0	63.3	16	1	1885.0	-	-	
14	121457.0	99.8	16	3	1035.0	1515.0	1120.0	
15	292606.0	63.6	16	1	1647.0	-	-	
16	461322.0	87.3	16	3	1931.0	1051.0	1831.0	

Statistics 27 (ChirpCenter Frequency: 5322.4 MHz)

Trial #	Burst Offset (us)	Pulse Width (µS)	Chirp (MHz)	Number of Pulses per Burst	PRI-1 (µS)	PRI-2 (µS)	PRI-3 (µS)	Detection (1:yes;0:no)
0	565136.0	85.6	19	3	1946.0	1078.0	1015.0	1
1	89970.0	68.6	19	2	1029.0	1780.0	-	
2	243121.0	54.2	19	1	1111.0	-	-	
3	396034.0	61.2	19	1	1104.0	-	-	
4	546225.0	97.1	19	3	1157.0	1969.0	1100.0	
5	70998.0	98.3	19	3	1142.0	1699.0	1622.0	
6	224093.0	62.4	19	1	1655.0	-	-	
7	376127.0	80.2	19	2	1126.0	1769.0	-	
8	527806.0	87.5	19	3	1216.0	1448.0	1179.0	
9	52247.0	85.8	19	3	1847.0	1348.0	1472.0	
10	204582.0	88.1	19	3	1023.0	1124.0	1631.0	
11	357941.0	65.3	19	1	1848.0	-	-	
12	510977.0	52.5	19	1	1470.0	-	-	
13	33698.0	52.3	19	1	1312.0	-	-	
14	186023.0	74.1	19	2	1915.0	1200.0	-	

15	339327.0	54.9	19	1	1479.0	-	-	
16	491053.0	76.2	19	2	1376.0	1502.0	-	
17	14858.0	60.4	19	1	1758.0	-	-	
18	167387.0	81.5	19	2	1491.0	1103.0	-	

Statistics 28 (ChirpCenter Frequency: 5326 MHz)

Trial #	Burst Offset (us)	Pulse Width (µS)	Chirp (MHz)	Number of Pulses per Burst	PRI-1 (µS)	Pulse 2-3 Spacing (µS)	Pulse Start (mS)	Detection (1:yes;0:no)
0	507709.0	50.5	10	1	1857.0	-	-	1
1	750249.0	55.7	10	1	1246.0	-	-	
2	989003.0	85.8	10	3	1774.0	1002.0	1967.0	
3	235634.0	76.9	10	2	1125.0	1474.0	-	
4	477675.0	75.1	10	2	1254.0	1052.0	-	
5	718312.0	92.3	10	3	1180.0	1486.0	1492.0	
6	960895.0	78.1	10	2	1301.0	1757.0	-	
7	205370.0	92.2	10	3	1898.0	1252.0	1713.0	
8	446940.0	89.0	10	3	1260.0	1706.0	1411.0	
9	689225.0	70.9	10	2	1578.0	1620.0	-	
10	932305.0	63.1	10	1	1782.0	-	-	
11	176231.0	55.3	10	1	1522.0	-	-	

Statistics 29 (ChirpCenter Frequency: 5323.2 MHz)

Trial #	Burst Offset (us)	Pulse Width (µS)	Chirp (MHz)	Number of Pulses per Burst	PRI-1 (µS)	Pulse 2-3 Spacing (µS)	Pulse Start (mS)	Detection (1:yes;0:no)
0	437880.0	97.3	17	3	1319.0	1826.0	1635.0	1
1	598445.0	90.4	17	3	1079.0	1986.0	1674.0	
2	97088.0	91.8	17	3	1563.0	1151.0	1802.0	
3	257251.0	98.2	17	3	1876.0	1977.0	1766.0	
4	419893.0	59.5	17	1	1952.0	-	-	
5	580724.0	80.0	17	2	1253.0	1137.0	-	
6	77366.0	86.5	17	3	1054.0	1128.0	1828.0	
7	238032.0	91.1	17	3	1105.0	1599.0	1442.0	
8	398605.0	93.5	17	3	1867.0	1373.0	1087.0	
9	562025.0	60.7	17	1	1033.0	-	-	
10	57684.0	67.2	17	2	1288.0	1405.0	-	
11	219083.0	61.8	17	1	1585.0	-	-	
12	379234.0	79.4	17	2	1933.0	1667.0	-	
13	540896.0	81.4	17	2	1096.0	1464.0	-	
14	37916.0	65.7	17	1	1496.0	-	-	
15	198794.0	76.0	17	2	1733.0	1255.0	-	
16	359754.0	81.0	17	2	1326.0	1668.0	-	
17	437880.0	97.3	17	3	1319.0	1826.0	1635.0	

TestMode	Frequency[MHz]	Radar Type	Trial ID	Pulse width (µs)	PRI (µs)	Pulses per Hop	Detection (1: Yes; 0: No)
11A	5260	Type6	0	1	333.3	9	1
		Type6	1	1	333.3	9	1
		Type6	2	1	333.3	9	1
		Type6	3	1	333.3	9	1
		Type6	4	1	333.3	9	1

		Type6	5	1	333.3	9	1
		Type6	6	1	333.3	9	1
		Type6	7	1	333.3	9	1
		Type6	8	1	333.3	9	1
		Type6	9	1	333.3	9	1
		Type6	10	1	333.3	9	1
		Type6	11	1	333.3	9	1
		Type6	12	1	333.3	9	1
		Type6	13	1	333.3	9	1
		Type6	14	1	333.3	9	1
		Type6	15	1	333.3	9	1
		Type6	16	1	333.3	9	1
		Type6	17	1	333.3	9	1
		Type6	18	1	333.3	9	1
		Type6	19	1	333.3	9	1
		Type6	20	1	333.3	9	1
		Type6	21	1	333.3	9	1
		Type6	22	1	333.3	9	1
		Type6	23	1	333.3	9	1
		Type6	24	1	333.3	9	1
		Type6	25	1	333.3	9	1
		Type6	26	1	333.3	9	1
		Type6	27	1	333.3	9	1
		Type6	28	1	333.3	9	0
		Type6	29	1	333.3	9	1
11AC40MIMO	5310	Type6	0	1	333.3	9	1
		Type6	1	1	333.3	9	1
		Type6	2	1	333.3	9	1
		Type6	3	1	333.3	9	1
		Type6	4	1	333.3	9	1
		Type6	5	1	333.3	9	1
		Type6	6	1	333.3	9	1
		Type6	7	1	333.3	9	1
		Type6	8	1	333.3	9	1
		Type6	9	1	333.3	9	1
		Type6	10	1	333.3	9	1
		Type6	11	1	333.3	9	1
		Type6	12	1	333.3	9	1
		Type6	13	1	333.3	9	1
		Type6	14	1	333.3	9	1
		Type6	15	1	333.3	9	1
		Type6	16	1	333.3	9	0
		Type6	17	1	333.3	9	1
		Type6	18	1	333.3	9	1
		Type6	19	1	333.3	9	1
		Type6	20	1	333.3	9	1
		Type6	21	1	333.3	9	1
		Type6	22	1	333.3	9	1
		Type6	23	1	333.3	9	1
		Type6	24	1	333.3	9	1
		Type6	25	1	333.3	9	1
		Type6	26	1	333.3	9	1
		Type6	27	1	333.3	9	1
		Type6	28	1	333.3	9	1
		Type6	29	1	333.3	9	1
11AC80MIMO	5290	Type6	0	1	333.3	9	1
		Type6	1	1	333.3	9	1
		Type6	2	1	333.3	9	1
		Type6	3	1	333.3	9	1
		Type6	4	1	333.3	9	1
		Type6	5	1	333.3	9	1
		Type6	6	1	333.3	9	1
		Type6	7	1	333.3	9	1
		Type6	8	1	333.3	9	1

		Type6	9	1	333.3	9	1
		Type6	10	1	333.3	9	1
		Type6	11	1	333.3	9	1
		Type6	12	1	333.3	9	1
		Type6	13	1	333.3	9	1
		Type6	14	1	333.3	9	1
		Type6	15	1	333.3	9	1
		Type6	16	1	333.3	9	1
		Type6	17	1	333.3	9	1
		Type6	18	1	333.3	9	1
		Type6	19	1	333.3	9	1
		Type6	20	1	333.3	9	1
		Type6	21	1	333.3	9	1
		Type6	22	1	333.3	9	1
		Type6	23	1	333.3	9	1
		Type6	24	1	333.3	9	1
		Type6	25	1	333.3	9	1
		Type6	26	1	333.3	9	1
		Type6	27	1	333.3	9	1
		Type6	28	1	333.3	9	1
		Type6	29	1	333.3	9	1

9. Statistical Performance Check of Bridge Mode

9.1. Limit

Per KDB 905462 D02, Section 5.1 (footnote 2):

Networks Access Points with Bridge and/or MESH modes of operation are permitted to operate in the DFS bands but must employ a DFS function. The functionality of the Bridge mode as specified in §15.403(a) must be validated in the DFS test report. Devices operating as relays where they act as master and client must also employ DFS function for the master. The method used to validate the functionality must be documented and validation data must be documented. Bridge mode can be validated by performing a test statistical performance check (Section 7.8.4) on any one of the radar types. This is an abbreviated test to verify DFS functionality. MESH mode operational methodology must be submitted in the application for certification for evaluation by the FCC.

9.2. Test Procedure

The steps below define the procedure to determine the minimum percentage of successful detection requirements found in Tables 5-7 when a radar burst with a level equal to the DFS Detection Threshold + 1dB is generated on the Operating Channel of the U-NII device (In- Service Monitoring).

a) One frequency will be chosen from the Operating Channels of the UUT within the 5250-5350 MHz or 5470-5725 MHz bands.

b) In case the UUT is a U-NII device operating as a Client Device (with or without Radar Detection), a U-NII device operating as a Master Device will be used to allow the UUT (Client device) to Associate with the Master Device. In case the UUT is a Master Device, a U-NII device operating as a Client Device will be used and it is assumed that the Client will Associate with the UUT (Master). In both cases for conducted tests, the Radar Waveform generator will be connected to the Master Device. For radiated tests, the emissions of the Radar Waveform generator will be directed towards the Master Device. If the Master Device has antenna gain, the main beam of the antenna will be directed toward the radar emitter. Vertical polarization is used for testing.

c) Stream the channel loading test file from the Master Device to the Client Device on the test Channel for the entire period of the test.

d) At time T0 the Radar Waveform generator sends the individual waveform for each of the Radar Types 1- 6 in Tables 5-7, at levels defined in Table 3, on the Operating Channel. An additional 1 dB is added to the radar test signal to ensure it is at or above the DFS Detection Threshold, accounting for equipment variations/errors.

e) Observe the transmissions of the UUT at the end of the Burst on the Operating Channel for duration greater than 10 seconds for Radar Type 0 to ensure detection occurs.

f) Observe the transmissions of the UUT at the end of the Burst on the Operating Channel for duration greater than 22 seconds for Long Pulse Radar Type 5 to ensure detection occurs.

g) In case the UUT is a U-NII device operating as a Client Device with In-Service Monitoring, perform steps a) to f).

9.3. Test setup

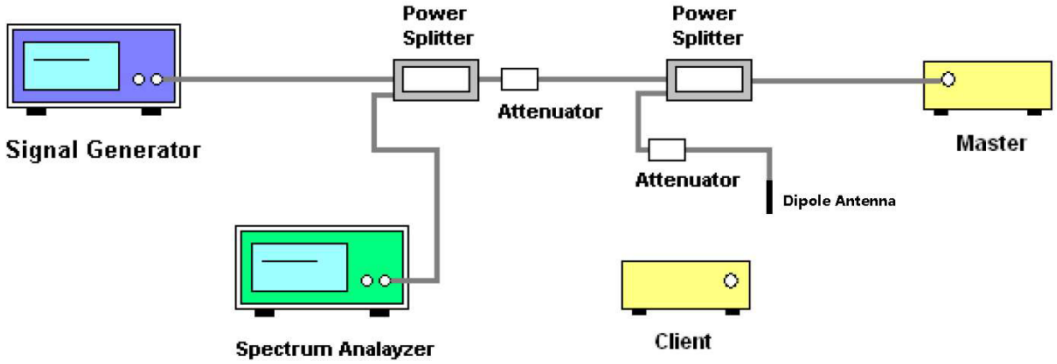

9.4. Test Result

Test Mode	Frequency[MHz]	Radar Type	Pass Times	Fail Times	Probability (%)	Limit (%)	Verdict
11A	5260	Type1	29	1	96.67	60	PASS
11AC40MIMO	5310	Type1	30	0	100.00	60	PASS
11AC80MIMO	5290	Type1	30	0	100.00	60	PASS

TestMode	Frequency[MHz]	Radar Type	Trial ID	Pulse width(μs)	PRI(μs)	Pulses per Burst	Detection (1: Yes; 0: No)
11A	5260	Type1	0	1.0	938.0	57	1
		Type1	1	1.0	698.0	76	1
		Type1	2	1.0	618.0	86	1
		Type1	3	1.0	538.0	99	1
		Type1	4	1.0	878.0	61	1
		Type1	5	1.0	3066.0	18	1
		Type1	6	1.0	638.0	83	1
		Type1	7	1.0	918.0	58	1
		Type1	8	1.0	838.0	63	1
		Type1	9	1.0	858.0	62	1
		Type1	10	1.0	798.0	67	1
		Type1	11	1.0	718.0	74	1
		Type1	12	1.0	578.0	92	1
		Type1	13	1.0	598.0	89	1
		Type1	14	1.0	558.0	95	1
		Type1	15	1.0	2536.0	21	1
		Type1	16	1.0	966.0	55	1
		Type1	17	1.0	827.0	64	0
		Type1	18	1.0	2501.0	22	1
		Type1	19	1.0	2595.0	21	1
		Type1	20	1.0	1114.0	48	1
		Type1	21	1.0	1302.0	41	1
		Type1	22	1.0	3045.0	18	1
		Type1	23	1.0	1624.0	33	1
		Type1	24	1.0	2878.0	19	1
		Type1	25	1.0	1027.0	52	1
		Type1	26	1.0	2485.0	22	1
		Type1	27	1.0	1600.0	33	1
		Type1	28	1.0	1172.0	46	1
		Type1	29	1.0	1177.0	45	1
11AC40MIMO	5310	Type1	0	1.0	938.0	57	1
		Type1	1	1.0	698.0	76	1
		Type1	2	1.0	618.0	86	1
		Type1	3	1.0	538.0	99	1
		Type1	4	1.0	878.0	61	1
		Type1	5	1.0	3066.0	18	1
		Type1	6	1.0	638.0	83	1
		Type1	7	1.0	918.0	58	1
		Type1	8	1.0	838.0	63	1
		Type1	9	1.0	858.0	62	1
		Type1	10	1.0	798.0	67	1
		Type1	11	1.0	718.0	74	1
		Type1	12	1.0	578.0	92	1
		Type1	13	1.0	598.0	89	1
		Type1	14	1.0	558.0	95	1
		Type1	15	1.0	2536.0	21	1
		Type1	16	1.0	966.0	55	1
		Type1	17	1.0	827.0	64	1
		Type1	18	1.0	2501.0	22	1
		Type1	19	1.0	2595.0	21	1
		Type1	20	1.0	1114.0	48	1
		Type1	21	1.0	1302.0	41	1
		Type1	22	1.0	3045.0	18	1
		Type1	23	1.0	1624.0	33	1
		Type1	24	1.0	2878.0	19	1
		Type1	25	1.0	1027.0	52	1
		Type1	26	1.0	2485.0	22	1
		Type1	27	1.0	1600.0	33	1
		Type1	28	1.0	1172.0	46	1

		Type1	29	1.0	1177.0	45	1
11AC80MIMO	5290	Type1	0	1.0	938.0	57	1
		Type1	1	1.0	698.0	76	1
		Type1	2	1.0	618.0	86	1
		Type1	3	1.0	538.0	99	1
		Type1	4	1.0	878.0	61	1
		Type1	5	1.0	3066.0	18	1
		Type1	6	1.0	638.0	83	1
		Type1	7	1.0	918.0	58	1
		Type1	8	1.0	838.0	63	1
		Type1	9	1.0	858.0	62	1
		Type1	10	1.0	798.0	67	1
		Type1	11	1.0	718.0	74	1
		Type1	12	1.0	578.0	92	1
		Type1	13	1.0	598.0	89	1
		Type1	14	1.0	558.0	95	1
		Type1	15	1.0	2536.0	21	1
		Type1	16	1.0	966.0	55	1
		Type1	17	1.0	827.0	64	1
		Type1	18	1.0	2501.0	22	1
		Type1	19	1.0	2595.0	21	1
		Type1	20	1.0	1114.0	48	1
		Type1	21	1.0	1302.0	41	1
		Type1	22	1.0	3045.0	18	1
		Type1	23	1.0	1624.0	33	1
		Type1	24	1.0	2878.0	19	1
		Type1	25	1.0	1027.0	52	1
		Type1	26	1.0	2485.0	22	1
		Type1	27	1.0	1600.0	33	1
		Type1	28	1.0	1172.0	46	1
		Type1	29	1.0	1177.0	45	1

11. Photos of the EUT

Please refer to DDT-Q25082809-2E appendix Ⅰ

----------End Report----------