正面

Feature/ Function

No.011

RGB+Cool+Warm White

Timing Function

Brightness Adjustable

Night Light

RF Remote Control

Memory Function

- Timing Setting: Press the button once, and the indicator light will flash once, indicating that the timing time has been successfully set. After the set time has elapsed, the light will automatically turn off. The timer setting has a maximum limit of 8 hours. When the limit is reached, the light will flash twice.
- Night Light Mode: In any light color, press the "Night Light" button and the brightness will be dimmed to 10%. Press the Up/Down key to adjust the brightness.
- Memory Function: When the device is turned off and on again with the power switch, it will reset to the default value.
- Two Rhythmic Modes: Choose the flash and smooth lighting mode by pressing the "F/S" buttons. After pressing the "F/S" buttons, the lighting frequency can be adjusted by pressing the "Up/Down" buttons.
- Press "Pause" buttons after pressing the "F/S" buttons, then press random color button, pressing the "F/S" buttons at the end, it will flash or smooth the color you choose.

Note:

1.It is recommended not to install the bulb next to the TV, which can help maintain good signal reception between the light bulb and the IR remote.

2. The bulb cannot be dimmed by the dimmer, Dimming can only be controlled through the remote control and the bulb button.

Specification

Color: Cool white , Warm white, RGB

Average life: 15000 hours

Remote control power supply: battery, 2x AAA

No.011

Rechargeable light bulb with Remote Control

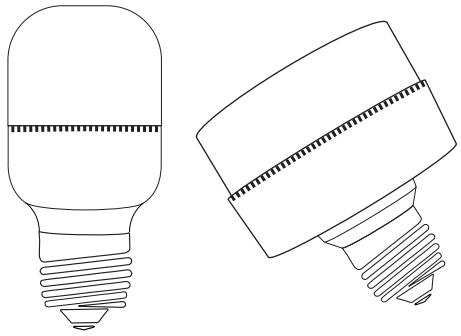

User Manual

反面

No.011

Instruction manual

*Thank you for purchasing our products. Please read the fllowing information carefully in order to fully use the product.

Product features

- Dimmable Color Choices: There are different color options of light available to meet all sorts of your needs. All colors of light can be dimmed using the remote control. Each color light offers 10 levels of brightness adjustment, allowing for better customization. (Note: The bulb cannot be used with a dimmer switch).
- Timing Function: Set the desired timing duration (up to 8 hours), and the lights will automatically turn off. This eliminates the need to worry about when the lights will be on.
- Charging Function: When the red light flashes, it indicates that it has been charged, and when the green light remains on for a long time, it indicates that it is fully charged. The power input is DC 5V, and the charging time is 6-7 hours.
- Memory Function: Turn off the lights through the remote control switch, and your color and brightness settings will remain unchanged until the next time the lights are turned on. We are glad to have saved you trouble, so there is no need to readjust.
- Auto Color Cycle Modes: Flash mode to enliven the party and Smooth mode forromance. Both switch colors automatically in cycle. You may also control the speed of color-switching in two modes via the dimming buttons, and press the pause button to hold. Perfect for indoor decoration.

Precautions

- The bulb cannot be charged from the socket power supply, please use it directly on the lamp without power supply.
- It can not work on dimmer switch, if connect to holder with SCR dimmable switch, the light will appear flashing, timing inaccuracy, shifting mode instability, etc.
- If the remote control cannot work, please try to remove and replace the battery.
- Do not use in confined and narrow spaces, it will shorten the life of the bulb and speed up the light failure of the bulb.

No.011

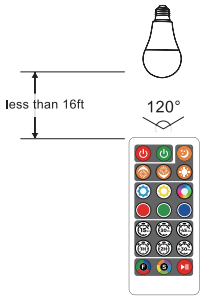

Feature/ Function

The radiation-emitting angle of the remote control is 120° in front of the receiver,the distance should be within 16 ft.
(please point the remote control directly to the light,no barrier blocking the track)

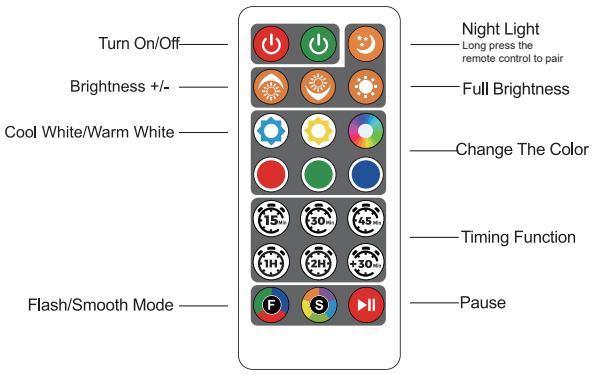

FCC Caution:

This device complies with part 15 of the FCC Rules. Operation is subject to the following two conditions: (1) This device may not cause harmful interference, and (2) this device must accept any interference received, including interference that may cause undesired operation.

Any Changes or modifications not expressly approved by the party responsible for compliance could void the user's authority to operate the equipment.

Note: This equipment has been tested and found to comply with the limits for a Class B digital device, pursuant to part 15 of the FCC Rules. These limits are designed to provide reasonable protection against harmful interference in a residential installation. This equipment generates uses and can radiate radio frequency energy and, if not installed and used in accordance with the instructions, may cause harmful interference to radio communications. However, there is no guarantee that interference will not occur in a particular installation. If this equipment does cause harmful interference to radio or television reception, which can be determined by turning the equipment off and on, the user is encouraged to try to correct the interference by one or more of the following measures:

-Reorient or relocate the receiving antenna.

-Increase the separation between the equipment and receiver.

-Connect the equipment into an outlet on a circuit different from that to which the receiver is connected.

-Consult the dealer or an experienced radio/TV technician for help.

The device has been evaluated to meet general RF exposure requirement. The device can be used in portable exposure condition without restriction.