Raindrop humidifier

INSTRUCTION MANUAL

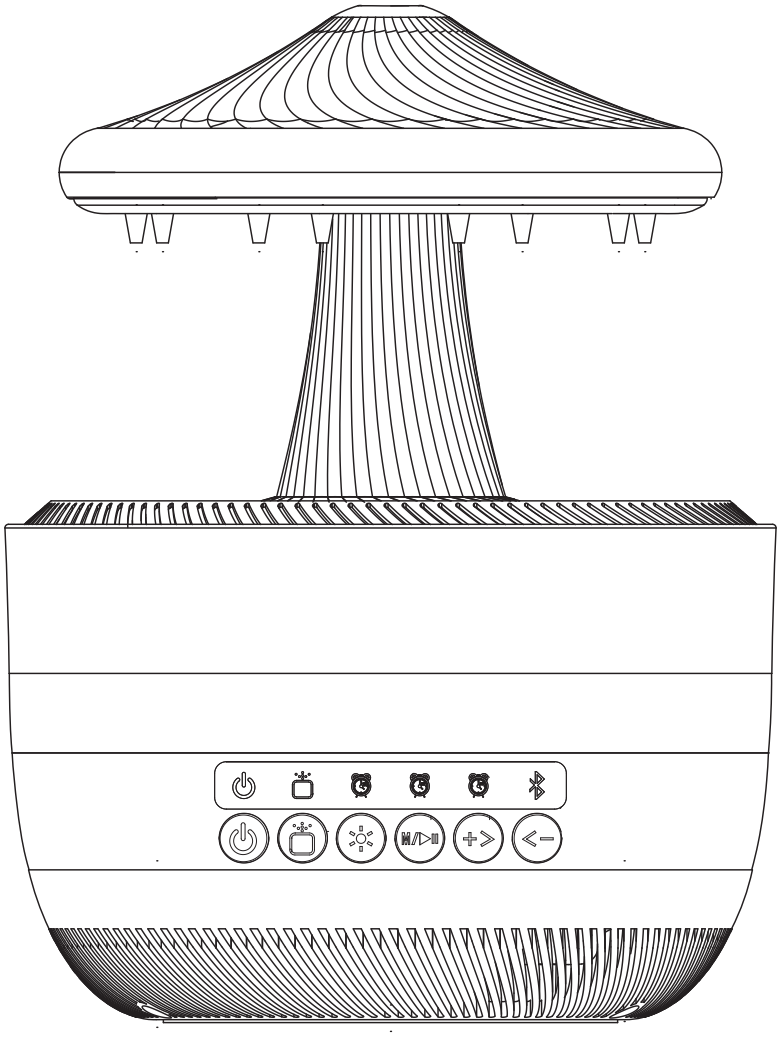

Thank you for purchasing our product,please read instruction manual carefully before using.

PRODUCT PARAMETERS

Model No.:T78
Input current:DC 24V/650mA
Water tank:350ML
Spray volume:100-150mL/h
Net weight:282g

Product size:120*120*180mm
Origin:China
Material: ABS+PP

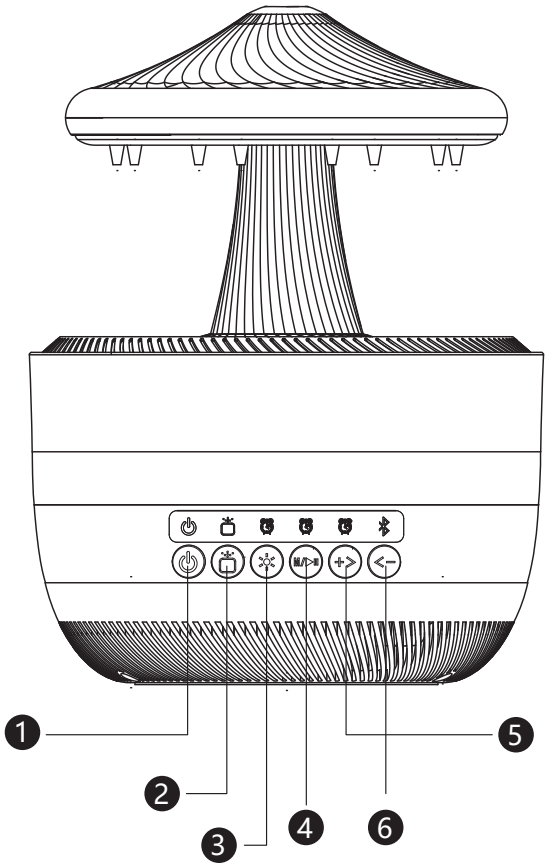

1.On-off key
2.Raindrop atomization
3.Light key
4.Bluetooth button, music pause button
5.Previous/Long press to reduce volume
6.Next/Press and hold to increase volume

PRODUCT'SACCESSORIES

Raindrop humidifier, power adapter, remote control, manual

STEPS FOR USAGE

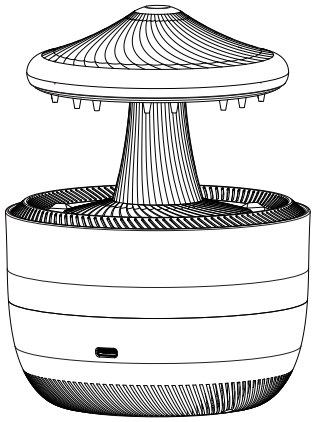

1.Connect Port

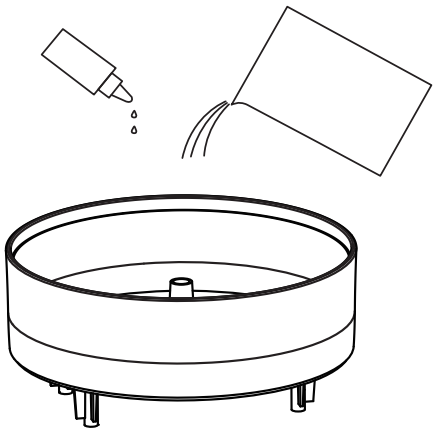

2.adding water should exceed the tank pillar but donotexceed the max line

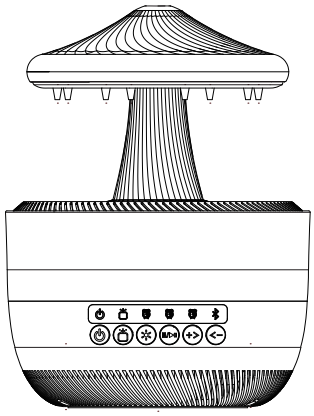

3.Boot work

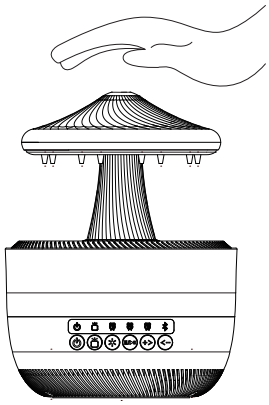

4.Start spray, rain drop after 10 secs (Gently tap the top cover,water drops work well)

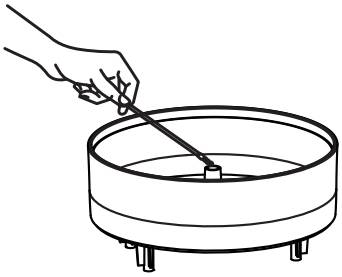

Warm Tips:
Please try to use pure water,otherwise,it will make the atomizer sheet dirty,and will cause the mist volume small or water drop hole blocked,or will not drop the water.If the above situations happen, please take a cotton swab and gently clean the surface of the atomization sheet.

PRECAUTIONS

1. Please make the water voiume is higher than the middle pillar, then waterdrop will be in best status.
2. Do not add water exceed the MAX fine to avoid the water leak out when working
3. The dia of holes is very small and the water has a tension effect. If the diffuser doesn't work for along time, waterdrop doesn't drip down in some holes after the restart. This time, please gently tap the top cover till the waterdrop work well.
4. User can tap the top cover slightly, but do not shake the diffuser too hard otherwise it might cause disconnection inside, or you can use the small brush to help the water passing through the holes.
5. Please place the diffuser at a balanced level.

SAFETYINSTRUCTION

1.Individuals who lack relative experience and knowledge(including children),must use the diffuser under the supervision and guidance of aguardian.
2.DO NOT connect or disconnect the power adapter with wet hands which will cause electric shock.
3.Please make sure that the DC port and the adapter are dry before connecting, to avoid a short circuit .
4.Please only use the attached DCadapter (24V/650mA).
5.If long time unuse, please unplug the power adapter.
6.The water can not stay in the water tank exceed 72 hours to avoid bacterial growth.

雨滴加湿器

使用说明书

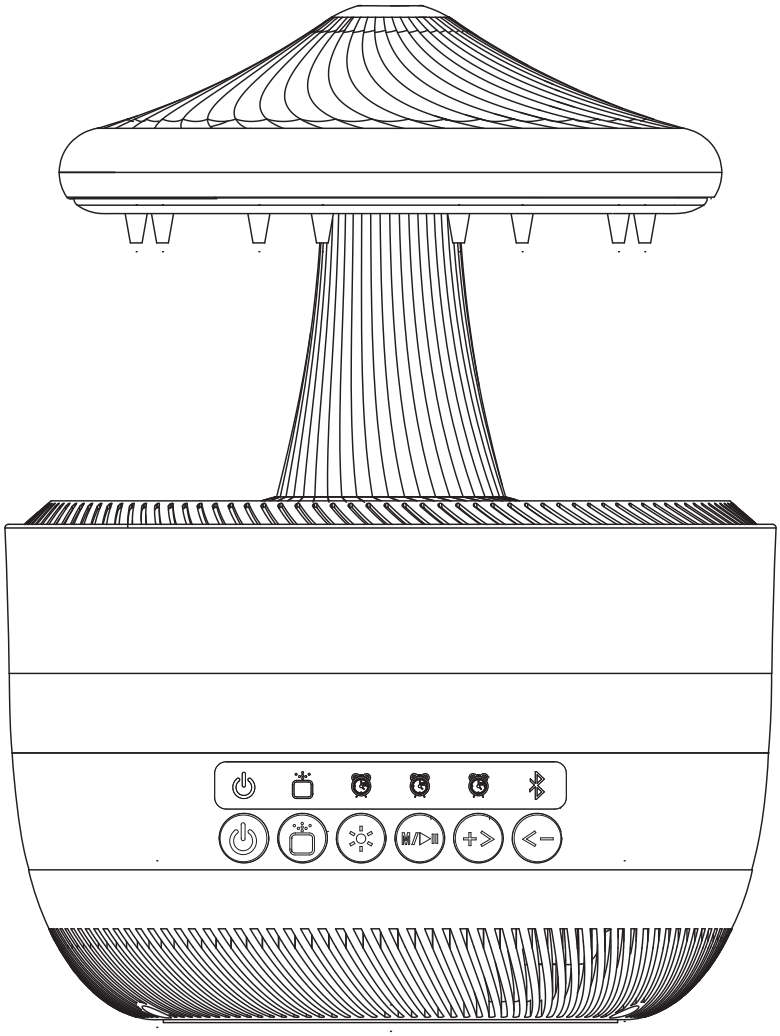

感谢您购买我们的产品，请在使用前仔细阅读使用说明书。

产品参数

型　　号: T78
输入电流: DC 24V/650mA
水　　箱: 350毫升
喷 雾 量 : 100-150mL / h
净　　重: 282 g

产品尺寸: 120*120*180mm
产　　地: 中国
材　　料: ABS + PP

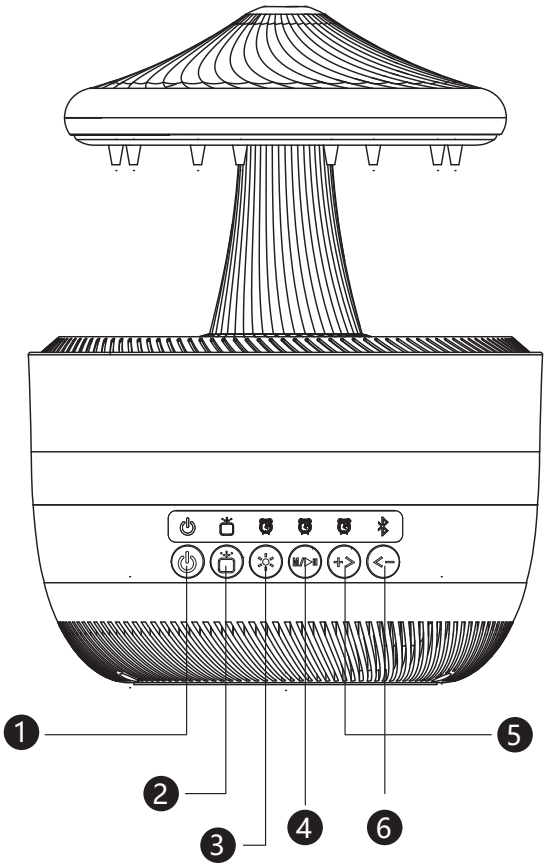

1. 开关的关键
2. 雨滴雾化
3. 光的关键
4. 蓝牙按钮，音乐暂停按钮
5. 上一曲/长按减小音量
6. 上一曲/长按增加音量

产品配件

雨滴加湿器，电源适配器，遥控器控制、说明书

使用步骤

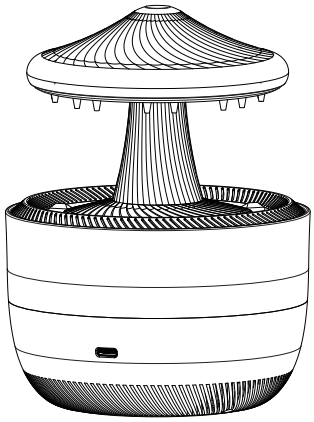

1.连接端口

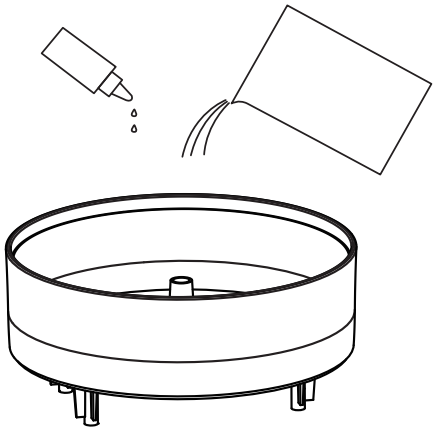

2.加水应超过水箱支柱，但不超过最大线

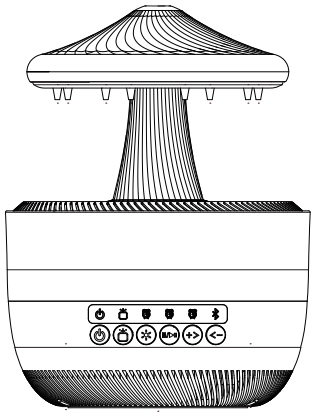

3.引导工作

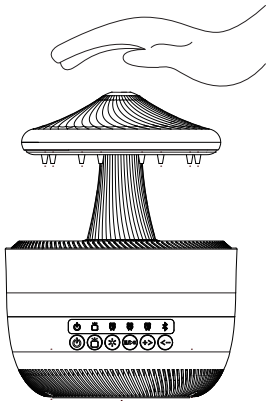

4.开始喷雾，10秒后雨滴落下(轻轻拍打顶部盖子，雨滴效果更好)

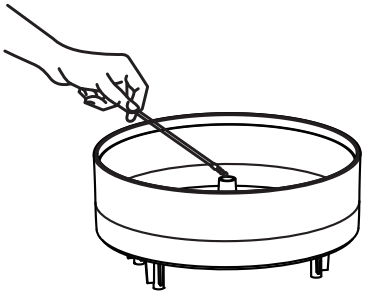

温馨提示:
请尽量用纯净水，否则会弄脏的雾化器片材脏了，又会造成雾气体积小或水滴孔堵塞，或将不滴水。如果发生上述情况，请用棉签轻轻清洁雾化片的表面。

预防措施

1. 请使水的体积高于中柱，这样水滴将处于最佳状态。

2. 加水不要超过最大限额，以免工作时漏水

3. 孔的直径非常小，水有张力效应。如果扩散器长时间不工作，重新启动后，有些孔内的水滴不往下滴。这一次，请轻拍顶部盖，直到水滴工作良好。

4. 用户可以轻拍顶部盖子，但不要太用力摇晃扩散器，否则可能会导致内部断开，或者您可以使用小刷子帮助水通过孔。

5. 请将扩散器置于平衡位置。

安全说明

1.缺乏相关经验和知识的个人(包括儿童)，必须在监督和监护下使用扩散器监护人的指导。

2.不要用湿手连接或断开电源适配器这会引起电击。

3.请确保直流端口和适配器干燥连接时，避免短路。

4.请只使用随附的直流适配器(24V/650mA)。

5.如果长时间不使用，请拔掉电源适配器。

6.水在水箱内停留不能超过72小时，避免细菌生长。

FCC WARNING

This device complies with part 15 of the FCC Rules. Operation is subject to the following two conditions: (1) this device may not cause harmful interference, and (2) this device must accept any interference received, including interference that may cause undesired operation.

Any changes or modifications not expressly approved by the party responsible for compliance could void the user's authority to operate the equipment.

NOTE: This equipment has been tested and found to comply with the limits for a Class B digital device, pursuant to Part 15 of the FCC Rules. These limits are designed to provide reasonable protection against harmful interference in a residential installation. This equipment generates, uses and can radiate radio frequency energy and, if not installed and used in accordance with the instructions, may cause harmful interference to radio communications. However, there is no guarantee that interference will not occur in a particular installation.

If this equipment does cause harmful interference to radio or television reception, which can be determined by turning the equipment off and on, the user is encouraged to try to correct the interference by one or more of the following measures:

-- Reorient or relocate the receiving antenna.

-- Increase the separation between the equipment and receiver.

-- Connect the equipment into an outlet on a circuit different from that to which the receiver is connected.

-- Consult the dealer or an experienced radio/TV technician for help.

To maintain compliance with FCC’s RF Exposure guidelines, This equipment should be installed and operated with minimum distance between 20cm the radiator your body: Use only the supplied antenna.