IMYB

W82

3-IN-1 GAMING HEADSET

INSTRUCTION MANUAL

FUNCTIONAL PROFILE

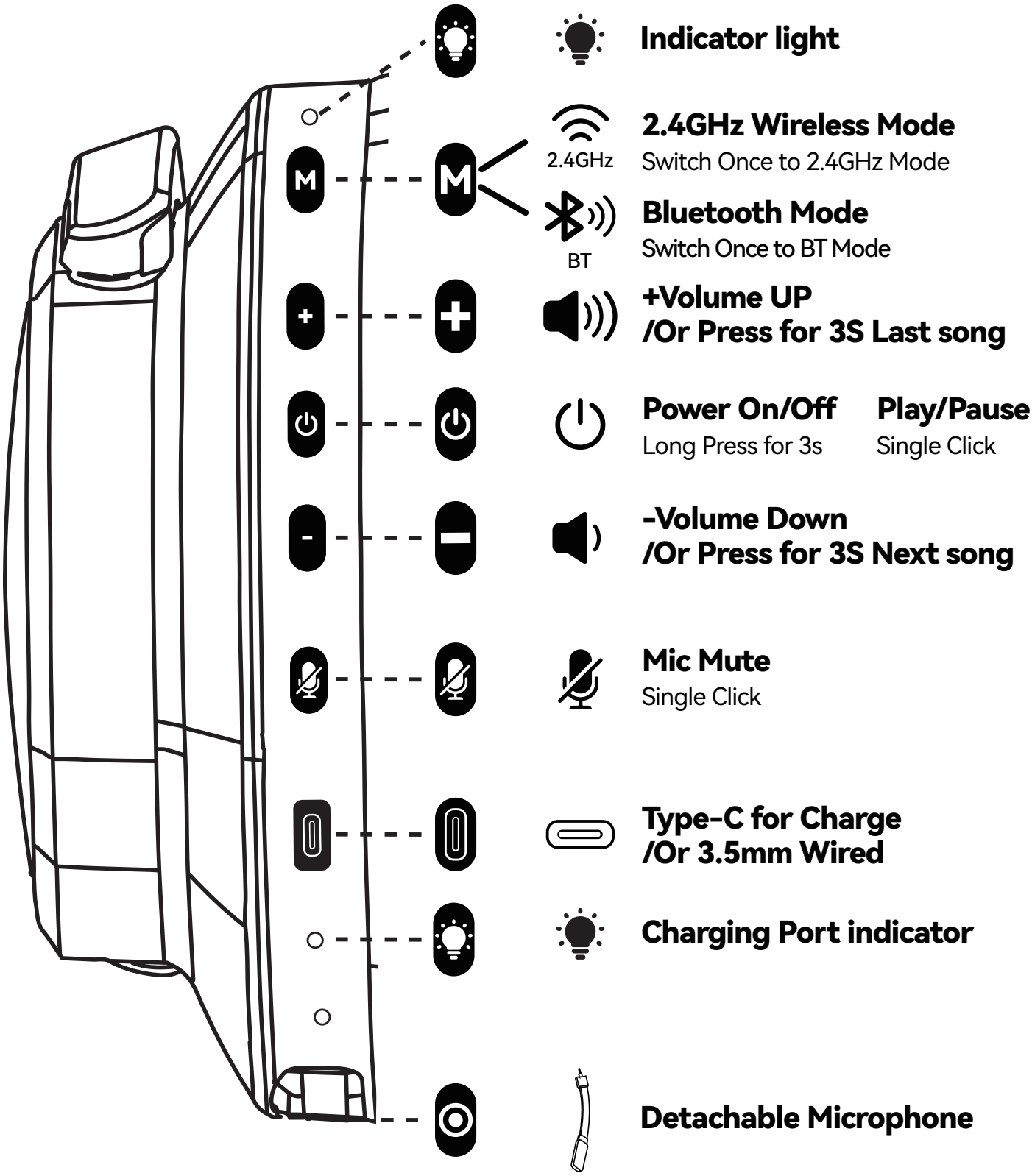

PACKAGE DETAILED

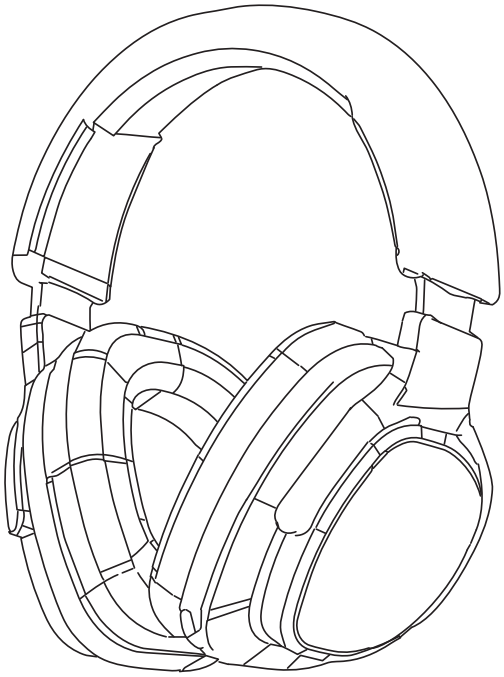

GAMING HEADSET

Detachable Mic

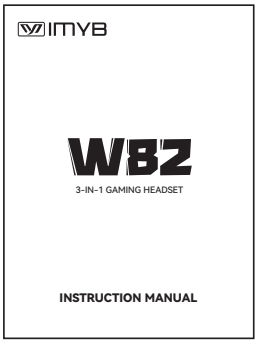

Instruction book

Type-c
converter

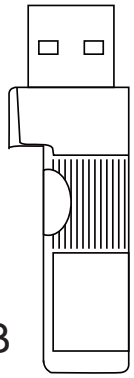

*Must pull in
the Type-c
during use USB

USB
converter

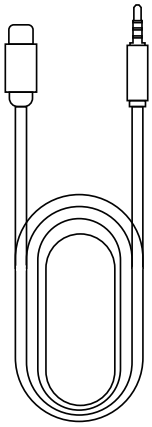

Type-C 3.5mm
Audio line

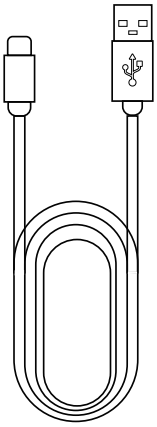

USB Type-C
Charge

POWER ON/OFF

POWER ON:
Hold down the power button for 3s, the working status indicator light flashes blue for 1s.

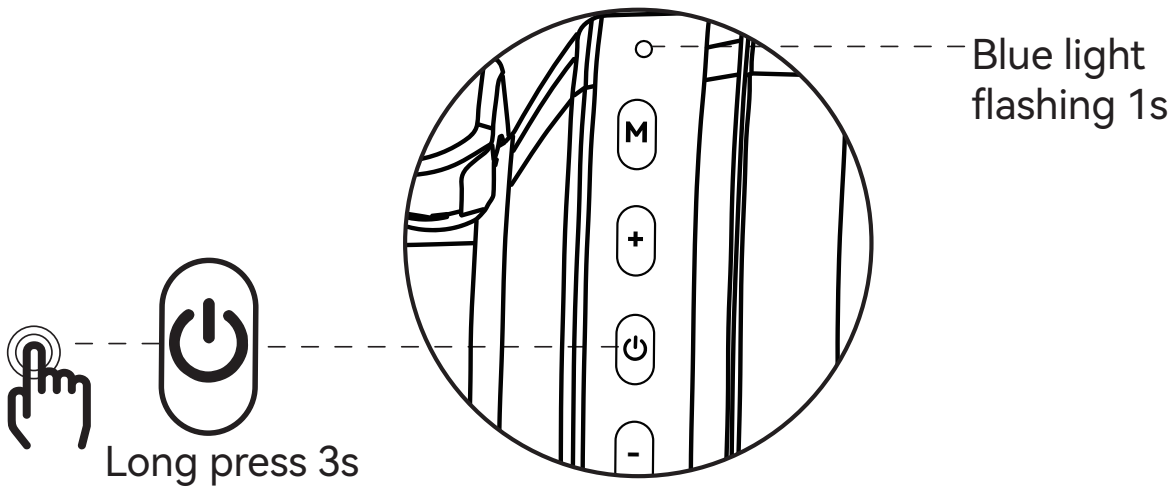

Enter pairing/re-connection state: After powering on, if there is no connection record, the device will directly enter the pairing state after powering on, and automatically shut down if pairing fails after 5 minutes.
If there is a connection record, the device will enter the re-connection state after powering on, reconnect to the last connected device, and automatically shut down if re-connection fails after 5 minutes.

POWER OFF:
Press the power button for 3s, the working status indicator light turns red for 1s and then turns off.

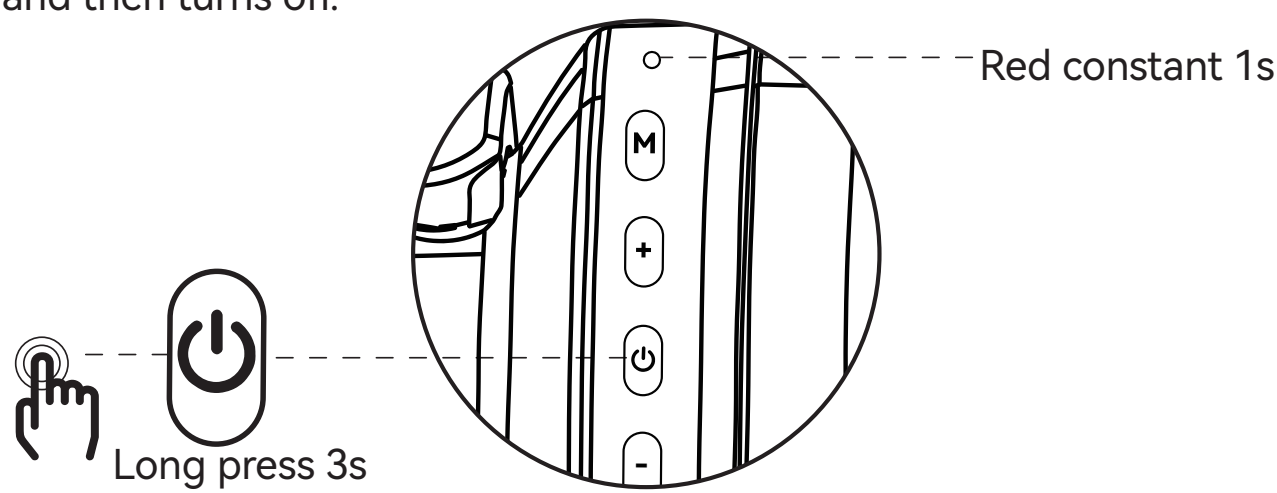

If the device is not connected to any device within 5 minutes after being powered on, it will automatically shut down to save power.

MODE SWITCHING

1.Single-click the mode switch button to switch between Bluetooth mode and 2.4G mode; double-click the mode switch button to turn off/on the side light of the headset.

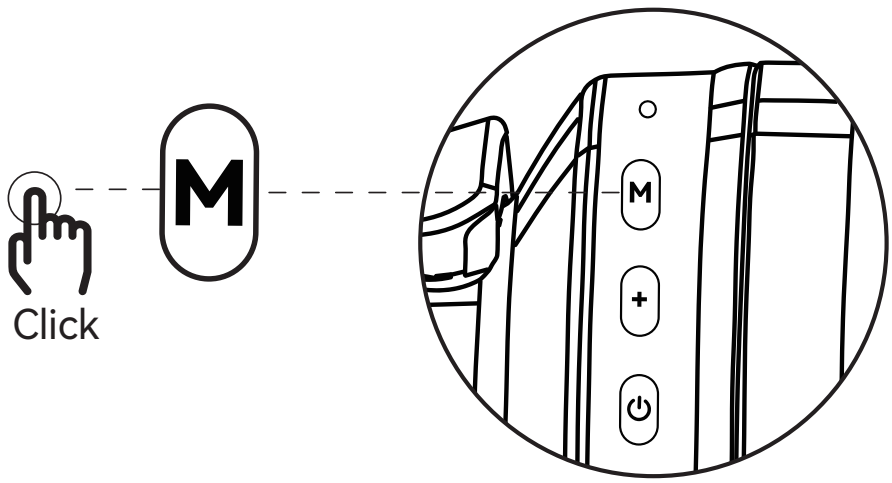

2. Plug in the Type-c/3.5mm audio cable, The headset will shut down and enter wired mode. (When turned off, the buttons are invalid.)

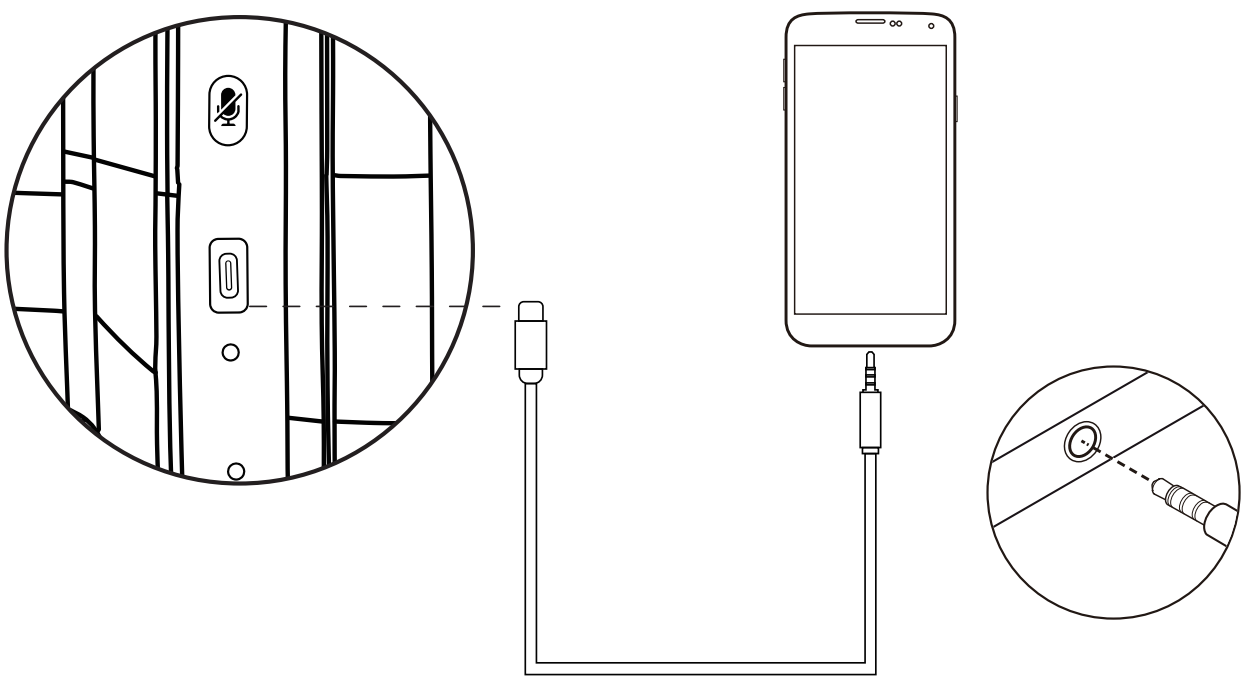

WIRELESS CONNECTION

BLUETOOTH MODE:
Click the mode switch button to switch from 2.4G mode to Bluetooth mode. The working status indicator light flashes blue slowly. Select "IMYB-W82" in the device and connect. After the headset is successfully connected to Bluetooth, the indicator light is always blue.

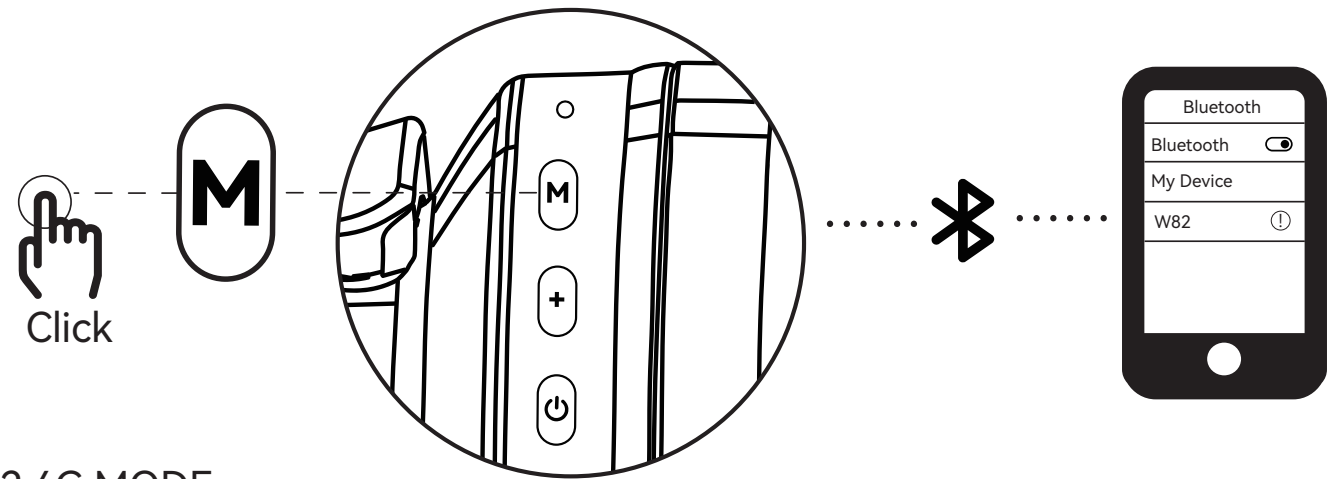

2.4G MODE:
1. Connect the 2.4G adapter to the device, the headset indicator light flashes slowly in white, turn on the headset and switch to 2.4G mode, and the indicator light stays on in white after the headset is successfully connected to the adapter.
2. If the headset indicator light continues to flash and the headset cannot be successfully connected, please turn off the headset first, then turn it back on, switch to 2.4G mode, or reinsert the adapter and wait for the adapter to automatically connect.

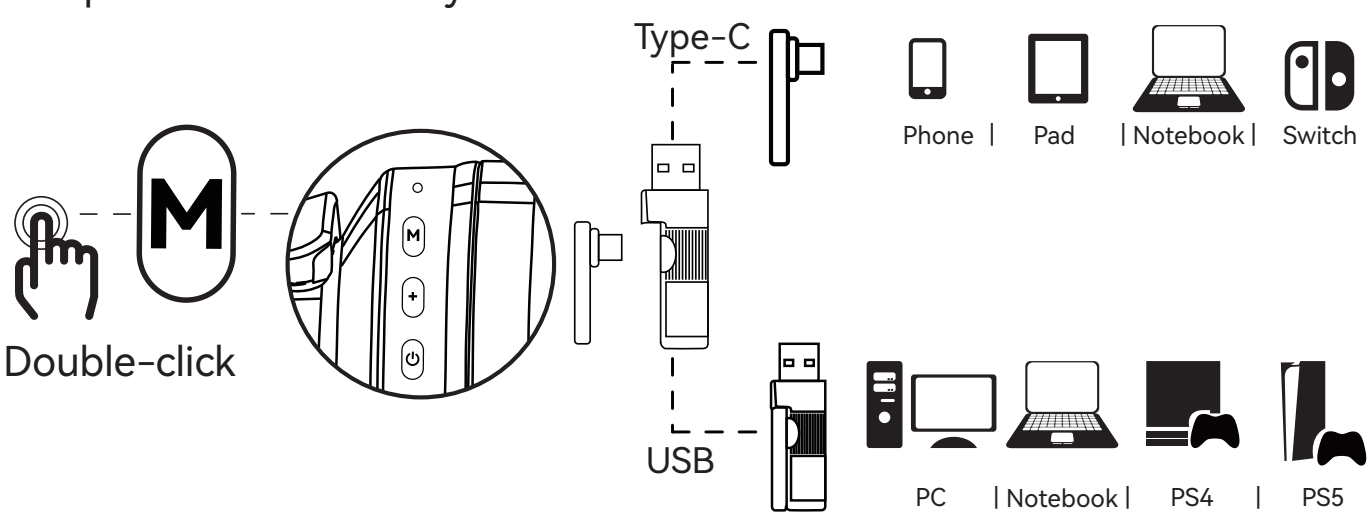

* Must pull in the Type-c during use USB

In adapter mode, it is possible to connect two different devices separately via Bluetooth and 2.4G adapter.

1. 2.4G adapter connected to computer, Bluetooth connected to mobile phone:
At this time, the headset plays the content of the computer connected to the 2.4G adapter, such as games. The audio signal of the mobile phone cannot be transmitted to the headset. If there is an incoming call on the mobile phone at this time, the headset will switch to the incoming call of the mobile phone. After the call ends, the headset automatically returns to the 2.4G adapter connection state.

2, 2.4G adapter connected to the mobile phone, Bluetooth connection to the computer at this time, the headset only plays the mobile phone contentconnected by the 2.4G adapter, and all the audio content on the computer side will not be transmitted to the headset from beginning to end.

3, Connect the phone to the 2.4G adapter and Bluetooth at the same time: The last connection mode is the only output mode, the first connection mode is invalid.

SWITCHING MICROPHONE

ON STATE:
1.Click the microphone mute button to enable the microphone. Red light on.
2.Click the microphone mute button to disable the microphone. Red light off.

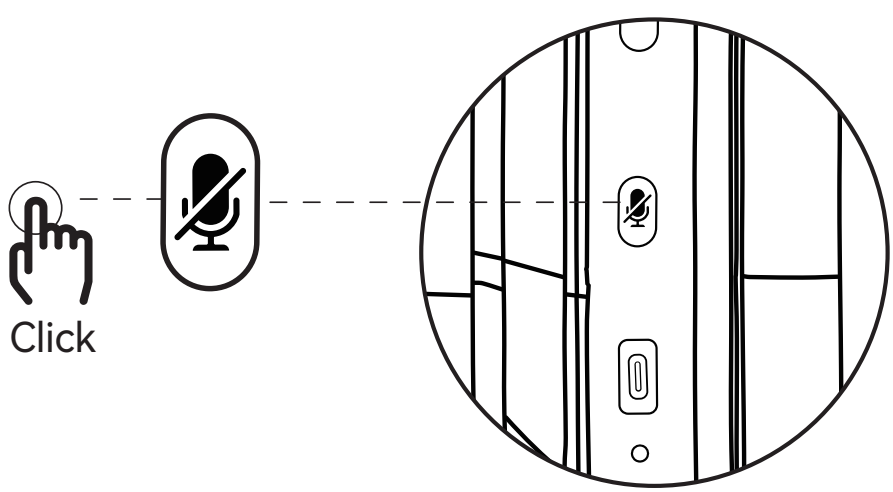

ANSWER AND PLAY

2.4G AND BLUETOOTH MODE:
1. When a call comes in: single-click the power button to answer the call; double-click the power button to reject the call.
2. When playing music: single-click the power button to play/pause music.
3. When on a call: single-click the power button to hang up the call.

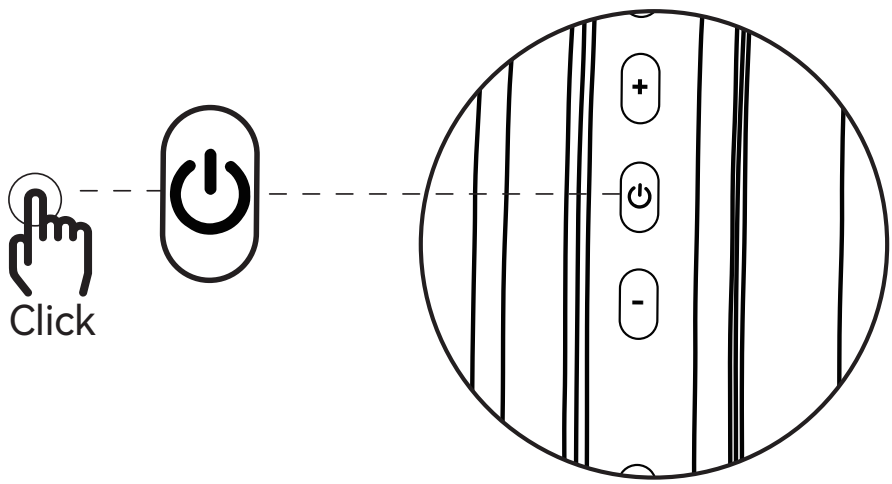

VOLUME ADJUSTMENT

Press and hold the Volume + button for 3 s to switch to the last song.

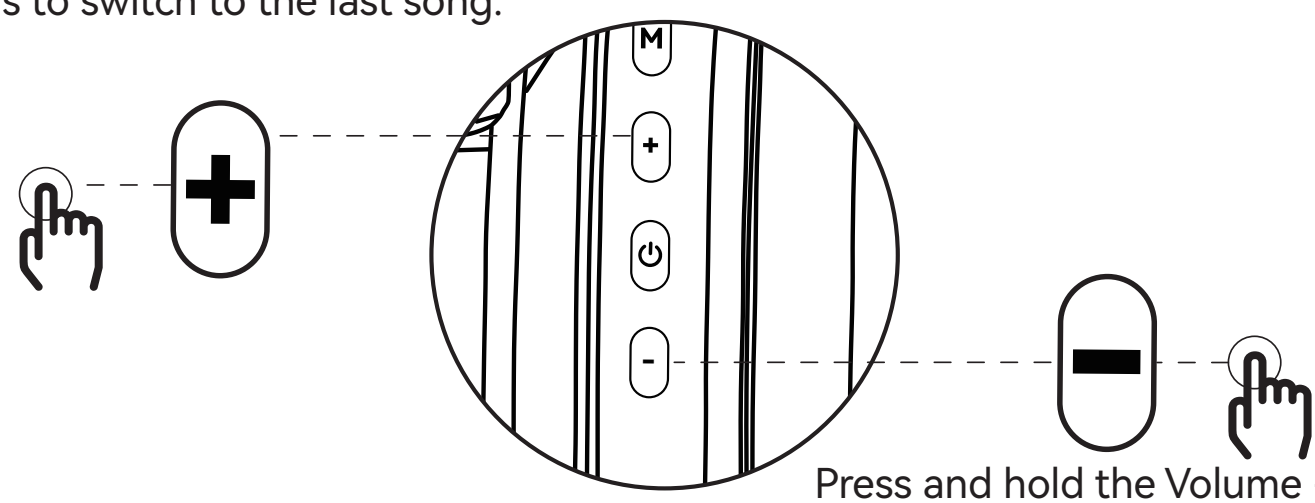

Press and hold the Volume - button for 3s to switch to the next song.

HEADSET LOW BATTERY REMINDER

When the voltage is lower than 3.3V, the low battery warning "battery low" broadcast every 10 minutes, and the power indicator light will flash red 3 times within 5s. When the voltage is lower than 3.10V, the red light for 1S and the headset will automatically shut down.

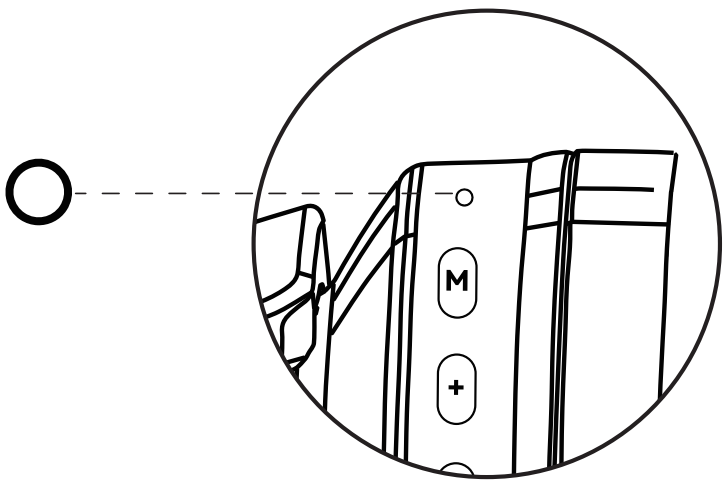

FACTORY DATA RESET

When the device is powered on,Press and hold the mode button for 8s to clear the Bluetooth pairing.
(whether it is in pairing or successful pairing can be cleared)

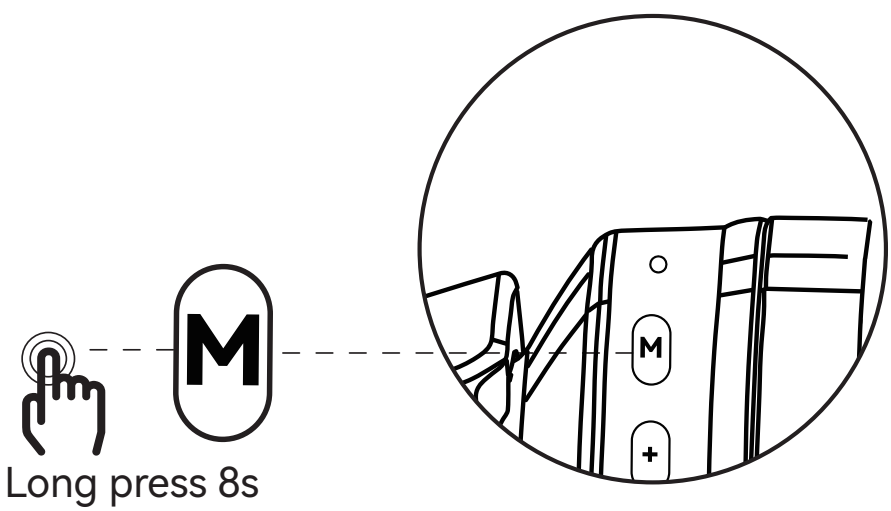

LIGHTS OFF

Double click the mode switch button to turn off and on the side light of the headset

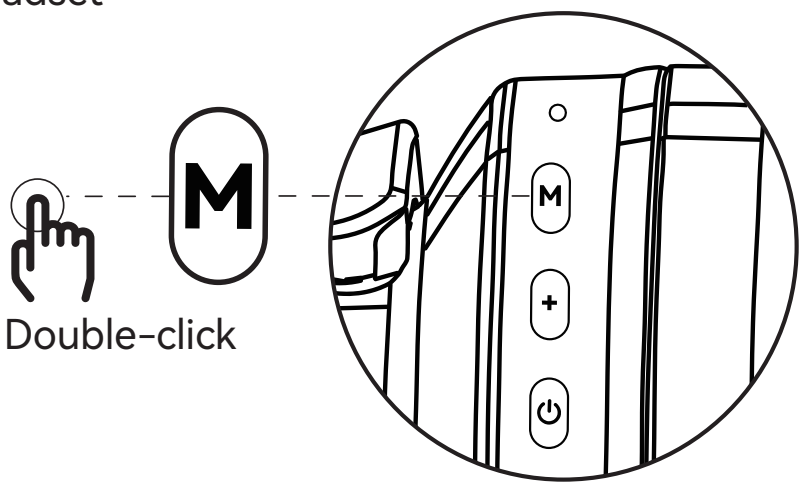

SPECIFICATIONS

Product Model: W82

Product Name: 3-In-1 GAMING HEADSET

Horn Diameter: 50mm

Audio Decoding: SBC/AAC

Connection Mode: 2.4G/Bluetooth/Wired

Frequency Response Range: 20Hz-20KHz

Bluetooth Version: V5.4

Speaker Sensitivity: 116db±3db

Bluetooth Distance: 10M

Rated Input: 5V-1A

MULTI- PLATFORM COMPATIBILITY

2.4GHz USB Dongle compatible with PC PS4 PS5 Laptop
2.4GHz USB not supported Xbox series

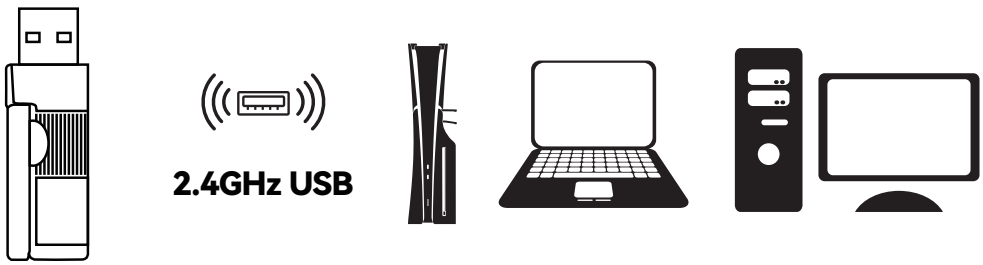

2.4GHz Type-C compatible with Switch Mobile
2.4GHzType-C not supported Xbox series

Bluetooth mode compatible with Mobile Mac
Bluetooth mode not supported Xbox series,PS4 and PS5

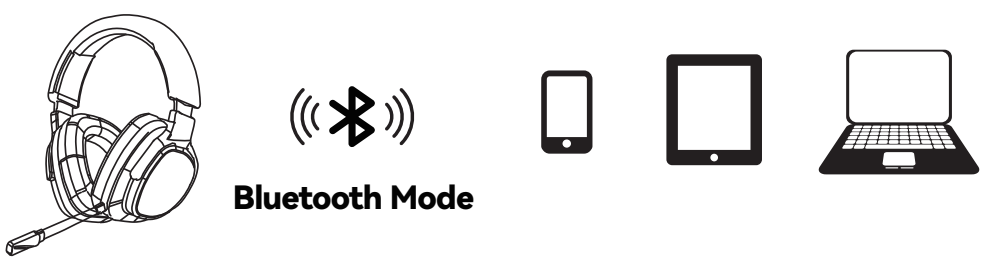

3.5mm wired mode compatible with PC PS4 PS5 Xbox Controller
Bluetooth mode not supported Xbox series,PS4 and PS5

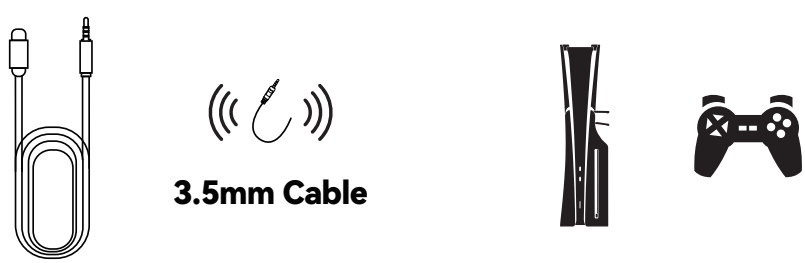

NOTES

1.When using it for the first time, please fully charge this product first.

2.If the product is not used for a long time (more than two weeks), please charge it.

3.If your phone fails to search for the Bluetooth headset, please confirm whether it is paired. If it has not been paired or connected for a long time, the Bluetooth headset will automatically shut down. Please turn on the Bluetooth headset again and make sure it is paired. If it still cannot be connected, please turn it on again or restore the factory Settings.

4.Using headphones for a long time may cause hearing damage, please arrange the usage time reasonably.

5.The headphone does not support charging with a charging stand with an output current greater than 1A. Otherwise, the headset itself will be damaged.

WARNING

1.Do not disassemble, repair or modify the headphones for any reason.

2.Do not place the product in an environment with too low or too high temperature (below 0℃ or above 45℃).

3.Avoid using the product light near the eyes of children or animals.

4.Do not use the product in thunderstorms, which may cause the product to work improperly and increase the risk of electric shock.

Manufacturer: Shenzhen Boen Zhongping Technology Co., Ltd.

Importer Name: Shenzhenshihuamingzeguangdianjishuyouxiangongsi

Email:huamingze@outlook.com

RoHS FC UK CA

FCC Warnning:

This equipment has been tested and found to comply with the limits for a Class B digital device, pursuant to part 15 of the FCC Rules. These limits are designed to provide reasonable protection againstharmful interference in a residential installation. This equipment generates, uses and can radiateradio frequency energy and, if not installed and used in accordance with the instructions, maycause harmful interference to radio communications. However, there is no guarantee thatinterference will not occur in a particular installation. If this equipment does cause harmfulinterference to radio or television reception, which can be determined by turning the equipmentoff and on, the user is encouraged to try to correct the interference by one or more of thefollowing measures:

- Reorient or relocate the receiving antenna.
- Increase the separation between the equipment and receiver.
- Connect the equipment into an outlet on a circuit different from that to which the receiver is connected.
- Consult the dealer or an experienced radio/TV technician for help.

Caution: Any changes or modifications to this device not explicitly approved by manufacturer could void your authority to operate this equipment.

This device complies with part 15 of the FCC Rules. Operation is subject to the following two conditions:

(1)This device may not cause harmful interference, and (2) this device must accept any interference received, including interference that may cause undesired operation.

This equipment complies with FCC radiation exposure limits set forth for an uncontrolled environment. This equipment should be installed and operated with minimum distance 0cm between the radiator and your body.