Modus

Thank you for choosing our product!

Please read the instructions carefully, so you will know how to operate your product properly. After you have finished reading the instructions, keep this document in a safe place for future reference.

If there are any technical questions, please contact:

Customer care: 805-790-7383

Table of Contents

Introduction 2
Package Contents 2
Important 3
Control Panel Description 4
Mounting 5
Wiring 6
Power On/Off 8
Adjust Volume 8
Adjust Screen Brightness 9
Basic Functions 9
Listen to Radio 10
Bluetooth Streaming 11
USB Playback 12
Play Music from iPhone 13
Audio Input 14
Sound Settings 14
System Settings 15
Audio Remote Control 15
Party Streaming 16
Troubleshooting 17
Specifications 18

Introduction

The product is designed as a marine gauge radio with an integrated 6-channel amplifier, and 7-channel pre-amp outputs. You can stream audio from a mobile phone to this product via Bluetooth. You can also play music and movie files on a USB flash drive, and music from an external device can play via RCA inputs.

Audio Zones

The product can group your speakers into three audio zones (Zone 1, Zone 1 and Zone 3) in which you can adjust individual zones for volume level and sound effects to provide customized listening experience throughout your vessel.

Party Mode

With the Party Mode function, you can wirelessly connect this unit with Party Mode compatible units (**Modus models MX12**, **MX23** or **MX44**) to share the same audio content between the connected units in different areas (vessels).

Audio Remote Control

The unit can work with the following remote controls for you to control media playback anywhere in your vessel.

- A wired remote controller (currently un-available, sold separately)
- A wireless remote controller (**Modus model ATR-BTM**, sold separately).
- A NEMA2000® controller (**Modus models ACN-2K or AZC-2K**, sold separately)

Package Contents

When first unpacking this product, please check that the package contains each of the items listed below. If something is missing, contact the store where you purchased the product.

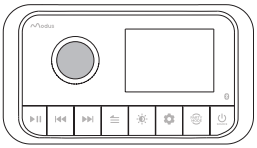
Marine Stereo

Power/Speaker Harness

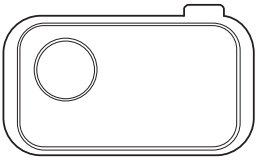
Rubber Protection Cover

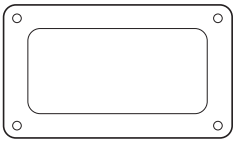
Mounting Gasket

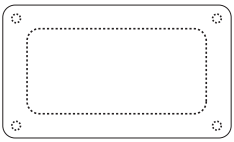
Mounting Template

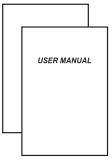

User Manual & Warranty

4x Mounting Screws (PA4 x 25)

Important

Please read and understand all instructions before you use your product. Failure to follow the instructions could result in injury and/or damage that could potentially void the warranty.

Safety Precautions

- Do not disassemble or modify this product. This can result in short circuits, fires, electric shocks or other hazards.
- Be sure to observe the following guidelines:
  - Do not increase speaker volume so high that you cannot hear what is around you.
  - Use caution or temporarily discontinue use in potentially hazardous situations.
- Start volume at a low setting then gradually increase the volume until you can hear it comfortably, without sound distortion or ear discomfort.
- In the event of smoke, strange noise or odor emitted from the product or any other abnormal operational signs appearing on the product, disconnect the product from the power supply. Discontinue use and contact your dealer or our technical support. Using the product in this condition may result in permanent damage to the system.
- Servicing must only be carried out by a technician. Contact our technical support for any service questions.

Installation Precautions

- **WARNING: Always consult a professional installer.**
- Installation must be performed by a professional. Contact our technical support for any installation questions.
- Use only installation parts provided with the product.
- Before installation, disconnect the negative terminal of the vehicle battery to prevent damage to the product, fire, and/or possible injury.
- Always connect the power cable to the vessel's battery through the fuse. This can avoid a short circuit.
- **Important!** Replace the faulty fuse with the same type and rating. Using a different type or rating of use may result in damage to the product or vehicle, or cause a fire.
- Observe the safety and operating instructions of the devices which are connected to the product.
- This product is resistant against splashing water. However, never submerge or subject the product to high-pressure water spray.

Environmental Care

Do not throw away the product with normal household waste at the end of its life. Follow your local laws if disposing of electronic products. By doing this, you help preserve the environment.

Control Panel Description

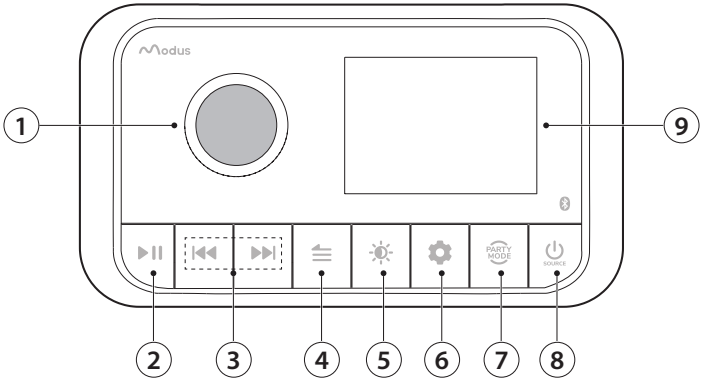

1 Function Knob

- Rotate to adjust all zone volume.
- Press to access zone-specific volume adjustment screen.
- When in menu screens, rotate to navigate menu options or change a setting, or press to confirm a selection.
- In radio source, press and hold to access the favorite stations menu.

2 ▶II (Pause/Resume)

- In Bluetooth/USB source, press to pause or resume play.
- In Radio/AUX source, press to mute or un-mute audio.

3 ⏮/⏭ (Previous/Next)

- In radio source, press to adjust frequency in step; press and hold to tune to a radio station.
- In Bluetooth/USB soruce, press to select the previous or next track; press and hold to fast backward/forward in USB source.

4 ⇦ (Back/Menu)

- When in menu screens, press to return to the previous menu level or exit the menu.
- In Bluetooth/USB source, press to access source-specific options.

5 ☀ (Brightness)

- Press to adjust screen and buttons brightness: low, medium and high.
- Press and hold to switch display theme between light and dark.

6 ⚙ (Settings)

- Press to access sound effects options.
- Press and hold to access system settings.

7 PARTY MODE (Party Mode)

- Press to access the Party Mode options to enable the unit's Party Mode as the host or a guest. ***(P.16)***
- Press to disable the Party Mode when the Party Mode is enabled. ***(P.16)***

8 ⏻/ SOURCE

- Press to power the unit on; hold down to power the unit off.
- When powered on, press to display source-selection screen.

9 LCD Color Display

Mounting

See the section "Installation Precautions". ***(P.3)***

Disconnect the negative terminal of the vehicle battery prior to installation.

Mount the unit in a location that does not interfere with your vessel operation. Do not mount the unit in a location which is subjected to excessive moisture, and extreme heat (e.g. nearby the engine or other heat sources).

If you must modify the vehicle for the installation, make sure you do not impair the safety and structural integrity of the vehicle.

Before you drill or cut any holes, investigate your vehicle's layout very carefully. Take special care when you work near the fuel tank, fuel lines, hydraulic lines and electrical wiring.

1. Use the supplied cutout template to mark the mounting hole and the four screw holes on the mounting surface.

2. Cut the mounting hole in the surface (See the illustration below).

3. Secure the unit in the mounting hole.

a. Remove the trim ring to access four screw holes on the unit's front panel.

b. Place the supplied rubber gasket onto the rear part of the unit (for water tightness).

c. Use the supplied four screws to fasten the unit in the dashboard.

4. Replace the trim ring.

If needed, place the rubber cover to protect the control panel against the harsh marine environment and additionally against UV exposure, water ingress and abrasion.

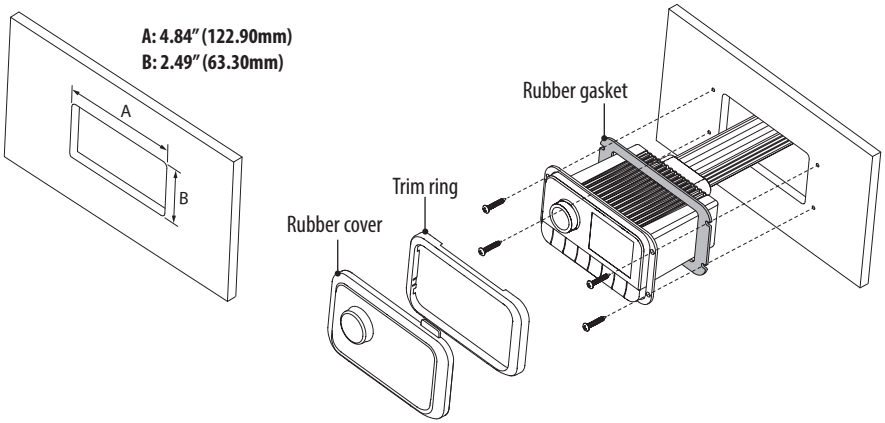

Wiring

See the section "Installation Precautions". ***(P.3)***
Disconnect the negative terminal of the vehicle battery prior to installation.
Connect the unit to a 12VDC battery and negative ground only.
Never ground or short the speaker wires. Insulate all bare wires and unconnected wires with electrical tape.

Power and Speaker Wiring

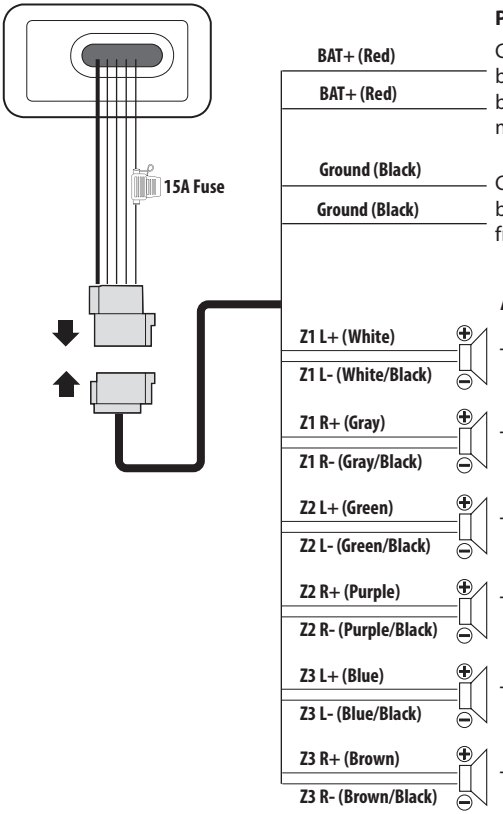

Power Supply Connection*

Connect two battery wires to the positive battery terminal for power supply (two battery wires are designed to provide maximum current for volume output)

Connect two ground wires to the negative battery terminal or to the vessel's metal frame

Audio Zone Connection**

To left speaker of Audio Zone 1

To right speaker of Audio Zone 1

To left speaker of Audio Zone 2

To right speaker of Audio Zone 2

To left speaker of Audio Zone 3

To right speaker of Audio Zone 3

IMPORTANT!

* You also need to connect the red wire (labeled "**REM-IN**") to a switched source (e.g. ignition switch), so that the unit can turn on with the switched source. See the wiring section next page.

* * Connect to 4-8 Ω speakers only. Do not bridge any of the channels.

External Components Wiring

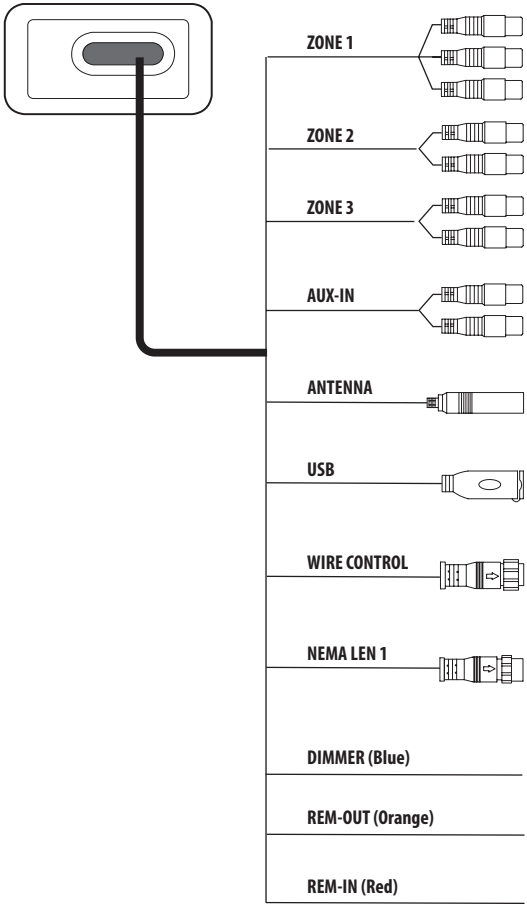

7-channel Pre-amp Outputs

Connect to RCA audio inputs on an external amplifier, white plug for left channel, red plug for right channel, **brown plug for mono subwoofer output (in Zone 1)**

To audio output on an external playback device ***(P.14)***

To radio antenna for better radio reception

Mobile phone charging (2.1A), or to a USB flash drive for media playback ***(P.12)***

To a wired remote controller (currently un-available , sold separately) for remote media playback control

To a NEMA2000® controller (**Modus models ACN-2K** or **AZC-2K**, sold separately) for remote media playback control

To the vessel's light for automatic dimming control ***(P.9)***

To an external amplifier for power control

Power Control Wiring*

To a switched source (e.g. ignition switch) for power on/off control

IMPORTANT!

* The red wire (labeled "**REM-IN**") must be connected to a switched source (e.g. ignition switch), so that the unit can turn on with the switched source.

Power On/Off

- To power the unit on, press ⏻/ **SOURCE**.
  - When powered on, the unit switches to the last selected source and the button lights are illuminated.
- To power the unit off, press and hold ⏻/ **SOURCE**.
  - When powered off, the screen and the button lights are turned off.

Adjust Volume

Adjust All Zone Volume Simultaneously

Simply rotate the function knob. The volume of all three audio zones (Zone 1/2/3) and subwoofer will be increased or decreased at the same time.

Adjust Individual Zone Volume Separately

1. Press the function knob. The zone-specific volume screen is displayed.
2. Rotate the function knob to select "**Zone 1**", "**Zone 2**", "**Zone 3**" and "**SUB**" (Subwoofer), and press the function knob to access the selected zone, then rotate the function knob to adjust the volume level.

   The zone-specific volume screen will exit after five seconds of inactivity.

Mute Volume

Press ▶II.

- Audio will mute in radio or AUX source.
- Media playback will pause in USB or Bluetooth source.

To un-mute or resume playback, press ▶II again.

Set Volume Limit

You can set the maximum volume level you adjust for each zone (Zone 1, Zone 2 and Zone 3).

1. Press and hold ⚙ to enter the system settings.
2. Use the function knob to select "**Audio Zone**", and a specific zone, then "**Maximum Volume Level**" to set a volume limit.

Link Subwoofer with a Zone for Volume Output

You can link the subwoofer to one of the audio zones (Zone 1, Zone 2 and Zone 3). When linked, the subwoofer volume level will change with the linked zone.

1. Press and hold ⚙ to enter the system settings.
2. Use the function knob to select "**Audio Zone**" > "**SUB**", and select a zone you want to link with or select the option to stay un-linked. When linked, ⊂⊃ is displayed.

Adjust Screen Brightness

Manual Adjustment

- Press ☀ to select a brightness level for screen and button lights: High, Medium or Low.
- Press and hold ☀ to switch display theme between light and dark.

Automatic Dimming

When the vessel light is turned on, the screen brightness and button lights will automatically dim. Make sure the blue wire (labeled "**DIMMER**") is connected to your vessel's light.

Basic Functions

You can access the following basic functions through the system settings.

1. Press and hold ⚙ to enter the system settings.
2. Rotate the function knob to select an option from the settings, and press the function knob to confirm the selection.
   Press ⇦ to exit the settings, or the settings will exit after five seconds of inactivity.

Key-Press Tone

"**BEEP**" option: You can turn on or off he key-press tone (sound made when pressing a button).

Start-up Screen

"**Boot-up Screen**" option: You can allow the animation screen to appear or skip before start up.

Button Lights Color

"**Button Backlight Color"** option**:** You can select a button light color: Blue or White.

Low Voltage Warning

"**Low Voltage Alert**" option: When enabled and the source battery is below 10V, the low voltage warning will be displayed on the screen.

To turn off the low voltage warning display, press ⏻/ **SOURCE**.

The low voltage warning display will come back on if the battery drops again below 10V from 11V or higher.

Menu Language

"**Language**" option: You can select an on-screen menu language.

Listen to Radio

You can listen to FM, AM and WB (Weather Band radio), and store the radio stations. The stored radio stations will be retained if the unit is disconnected from the vessel's battery.

Select a Radio Source

1. Press ⏻/ **SOURCE** to access the source-selection screen.
2. Rotate the function knob to select "**FM**", "**AM**", or "**WB**", and press the function knob to confirm.

Tune to a Radio Station

WB radio stations are preset, not applicable to this feature.

1. Select FM or AM radio.
2. Press and hold ⏮/ ⏭. The unit will find a station with strong reception.
   - If an FM radio station with stereo signal is reached, "stereo" will be displayed.
3. Repeat the steps above until your find your desired station.

To Tune to a Weak Station

Press ⏮/ ⏭ repeatedly to search by frequency step until you find optimal reception.

Store a Radio Station

You can store ten FM or AM radio stations each.

1. Tune to an FM or AM radio station.
2. Press and hold the function knob to access the favorite stations menu. The current station frequency appears on the top of the favorite stations menu.
3. Select the current station frequency from the menu top, and press the function knob to store the station. A star icon (★) is displayed when broadcasting the stored station.

   Repeat the steps above to store more stations.

Select a Stored Station

1. When listening to radio, press and hold the function knob to access the favorite stations menu.
2. Rotate the function knob to select "**Select Preset**" from the menu, and press the function knob to access the stored stations list.
3. Select a stored station from the stations list, and press the function knob. The selected station starts broadcasting.

To Delete a Stored Station

1. When listening to radio, press and hold the function knob to access the favorite stations menu.
2. Rotate the function knob to select "**Delete Preset**" from the menu, and press the function knob to access the stored stations list.
3. Select a stored station from the stations list, and press the function knob. The selected station is removed from the favorite stations list.

To delete all stored stations at a time, select "**Delete All Preset**" from the favorite stations menu.

Bluetooth Streaming

When you can stream music from your mobile device (e.g. a mobile phone) to the unit for the first time, you must pair the unit with your mobile device through Bluetooth.

1. Press ⏻/ **SOURCE** to access the source-selection screen.
2. Rotate the function knob to select "**Bluetooth**", and press the function knob to access the Bluetooth menu.
3. Select "**Pair New Device**" from the menu, and press the function knob to enter the pairing mode.
4. On your mobile device, enable Bluetooth then select "MODUS MX23" to pair the unit with your mobile device. If prompted for password, input "0000" on your mobile device.

   When successfully connected, audio automatically streams from the mobile phone to the unit.

Playback Control

When Bluetooth streaming, you can have the following controls.

- To pause or resume play, press ▶II.
- To select the previous or next audio file, press ⏮/ ⏭.

- During playback, the screen scrolls the following information: song/artist/album name. To stop scrolling text, press and hold ⚙ to access the system settings and select "**Scrolling Text**" to uncheck the checkbox.
- For best sound performance, set the volume of your mobile device to maximum, then adjust the volume through the controls on the unit.

Re-connect Device

To switch back to Bluetooth streaming from other sources or power off, press ⏻/ **SOURCE** to access the source-selection screen and select "**Bluetooth**".

Pair More Devices

1. In Bluetooth source or when Bluetooth streaming, press ☰ to access the Bluetooth menu.
2. Select "**Pair New Device**" from the menu, and press the function knob. The current Bluetooth connection is disconnected.
3. On another device, enable Bluetooth and select the unit name to complete pairing.

   Repeat the steps above to pair more devices.

Connect Another Paired Device

1. In Bluetooth source or when Bluetooth streaming, press ☰ to access the Bluetooth menu.
2. Select "**Connect Paired Device**" from the menu, and press the function knob to access the paired devices list.
3. Select a paired device from the list, and press the function knob to start streaming.

To delete a paired device or all paired devices at a time, select "**Delete Paired Device**" or "**Delete All Paired Devices**" from the Bluetooth menu.

Set Connection Priority

If the unit is paired with more than one deivce, you can set which paired device is connected when the unit is powered on.

1. In Bluetooth source or when Bluetooth streaming, press ☰ to access the Bluetooth menu.
2. Select "**Set Primary Device**" from the menu, and press the function knob to access the paired devices list.
3. Select a paired device from the list, and press the function knob to set the priority.

USB Playback

This unit can play audio and video files stored on a USB flash drive.

1. Insert a USB flash drive to the USB port on the unit. Audio automatically starts playback.

- To switch back to USB playback from other sources or power off, press ⏻/ **SOURCE** to access the source-selection screen and select "**USB**".
- During playback, the screen scrolls the following information: song/artist/album name. To stop scrolling text, press and hold ⚙ to access the system settings and select "**Scrolling Text**" to uncheck the checkbox.

Audio Playback

- During USB playback, press ☰ to access the USB play menu and use the function knob to navigate and select an audio option.
  - "**Play All Songs**": Playback starts from the beginning of the file which is initially played when the USB drive is inserted.
  - "**Select Song**": Access to select an audio file and playback starts from the beginning of the file you select.
- To pause or resume play, press ▶II.
- To select the previous or next music file, press ⏮/ ⏭.
- To search fast, press and hold ⏮/ ⏭.

To select a play mode

During audio playback, press and hold ▶II to access the playback options and use the function knob to select a play mode option.

- "**Shuffle**": Play all audio files randomly, or cancel random play mode.
- "**Repeat Song**": Play the current audio file repeatedly.
- "**Repeat All**": Play all audio files repeatedly.
- "**Repeat Off**": Cancel repeat play mode.

Video Playback

1. During USB playback, press ☰ to access the USB play menu.
2. Select "**Select Video**" from the menu and press the function knob to access the file browser. Use the function knob to navigate and select a video file to start playback.

- To pause or resume play, press ▶II.
- To select the previous or next video file, press |◀◀/ ▶▶|.
- To search fast, press and hold |◀◀/ ▶▶|.

To select a play mode

During video playback, press and hold ▶II to access the playback options and use the function knob to select a play mode option.

- "**Shuffle**": Play all video files randomly, or cancel random play mode.
- "**Repeat Video**": Play the current video file repeatedly.
- "**Repeat All**": Play all video files repeatedly.
- "**Repeat Off**": Cancel repeat play mode.

Play Music from iPhone

This unit can play audio from your iPhone.

1. Connect your iPhone to the USB port on the unit, using your iPhone USB cable.
   The unit automatically switches to iPod mode and starts playing music from the iPhone.

- To switch back to iPod mode from other sources or power off, press ⏻/ **SOURCE** to access the source-selection screen and select "**USB**".

Playback control

- To pause or resume play, press ▶II.
- To select the previous or next music file, press |◀◀/ ▶▶|.
- To search fast, press and hold |◀◀/ ▶▶|.

You can also control playback via the music playback buttons from your iPhone.

Select songs from browser

During iPhone music playback, press ☰ to access the music browser. Use the function knob to browse and select music for play by playlist, album, artist, songs, genres, etc.

Audio Input

The unit can play audio from a mobile phone or a playback device (e.g. CD/DVD player).

1. Connect the audio output jack on your mobile phone to the RCA audio inputs labeled "**AUX-IN**" on the unit, using the following audio cable (not included).
   - For a mobile phone with a headphone jack, use a 3.5mm to RCA cable.
   - For a mobile phone with a USB-C port, use a USB-C to RCA cable.
   - For an iPhone, use a lightning to RCA cable.

Or using audio cables with RCA plugs (not included), connect a playback device (e.g. CD/DVD player) with RCA audio outputs to the RCA audio inputs labeled "**AUX-IN**" on the unit.

2. Press ⏻/ **SOURCE** to access the source-selection screen, and use the function knob to navigate and select "**AUX**" . The AUX input screen is displayed.
3. Start playback on the connected device and audio will play through the unit.
   To mute audio, press ▶II on the unit. To adjust volume, rotate the function knob.

Adjust Input Level

When playing in AUX source, press ☰ to display the Input Sensitivity bar then rotate the function knob to adjust input level for volume output.

Sound Settings

The unit allows you to set the sound settings for audio zones separately.

1. When powered on, press ⚙ to enter the system settings.
2. Rotate the function knob to navigate options or adjust settings; press the function knob to access the sub-options or confirm the selection.
   Press ☰ to exit the settings, or the settings will exit after five seconds of inactivity.

Adjust Loudness

"**Loudness**": Enabled to boost output of low and high frequencies for all audio zones simultaneously.

Adjust Zone-Specific Sound Effects

Select "**Zone 1**", "**Zone 2**", or "**Zone 3**" from the settings menu to access the selected zone for sound adjustment.

- "**Treble**": Change output level for treble sound.
- "**Mid**": Change output level for midrange.
- "**Bass**": Change output level for bass sound
- "**Balance**": Adjust left-and-right speaker volume balance within the same audio zone.

Change Unit Name

"**Name This Device**": You can change the name of this unit to be displayed during Bluetooth pairing or connection. Input a new name on the pop-up keypad.

System Settings

This section helps you change the system settings of this unit.

1. When powered on, press and hold ⚙ to enter the system settings.
2. Rotate the function knob to navigate options or adjust settings; press the function knob to access the sub-options or confirm the selection.

   Press ☰ to exit the settings, or the settings will exit after five seconds of inactivity.

- "**Audio Zone**": Access to change zone-specific settings.
  - "**Max Volume Level**": Set the maximum volume level you can adjust for each zone (Zone 1, Zone 2 and Zone 3).
  - "**Rename Zone**": Select a name from the list for a specific zone. To change the name back to the default, select "**Factory Default**" from the list. Or select "**Custom**" to display on-screen keypad for name change input.
  - "**SUB**": Link the subwoofer to a zone or stay un-linked to a zone. When linked to a zone, the subwoofer volume level is changed with the linked zone level.
- "**Beep**": Turn on or off key-press sound.
- "**Boot-up Screen**": When disabled, the unit will skip the animation screen before start up.
- "**Button Backlight Color**": Select a button lights color: Blue or White.
- "**Diagnostic**": Display the current firmware version of the unit, or select "**SW Update Mode**" to update the unit (if the upgrade is required) through connecting a USB flash drive where a upgrade software is available.
- "**Language**": Select an on-screen menu language.
- "**Low Voltage Alert**": When enabled and the battery voltage is below 10V, the low voltage warning is displayed on the screen. Press ⏻/ **SOURCE** to turn off the warning.
- "**Scrolling Text**": Enable or disable scrolling of song information text displayed on the screen when playing audio in USB and Bluetooth source.
- "**Tuner Region**": Select a radio region where your unit is in.

Audio Remote Control

The unit can work with the following remote controls for you to control media playback anywhere in your vessel.

- A wired remote controller (currently un-available, sold separately)
- A wireless remote controller (**Modus model ATR-BTM**, sold separately).
- A NEMA2000® controller (**Modus models ACN-2K or AZC-2K**, sold separately)

Party Streaming

With Party Mode function, this unit can be wirelessly connected with Party Mode compatible units to share the same audio content in different areas (vessels) at the same time.

The unit which streams audio content is called **host**. The unit which plays the audio content streamed from the host is called **guest**.

What You Need

- Prepare two or more Party Mode compatible units (Modus models MX12, MX23 or MX44).

Set Party Mode

1. On the unit which is to set as host, press the Party Mode button (PARTY MODE) to access the Party Mode menu, select "**Host**" from the menu and press the function knob to enter the Party Mode.
   When the unit is in Party Mode, the PARTY ON logo is displayed on the top right of the screen.
2. On the other units which are to set as guest, press the Party Mode button (PARTY MODE) to access the Party Mode menu, select "**Guest**" from the menu and press the function knob to access the host unit names list. When the host unit name is selected, press the function knob to enter the Party Mode.
   When the unit is in Party Mode, the PARTY ON logo is displayed on the top right of the screen.
3. Now the guest unit automatically plays the audio content streamed from the host unit, and the guest unit is switched to the party streaming screen, showing the host unit name.

Set as Standalone

You can stop the party streaming on your unit and allow the unit to play individually.

- Press the Party Mode button (PARTY MODE) to turn off the Party Mode on your unit.

  If your unit is the host, audio streaming to the guest units will stop and you can select an audio source to play individually. The Party Mode on the guest units still remain on.

  If your unit is a guest, it will not receive the audio content from the host unit and you can select an audio source to play individually. The Party Mode on the host unit and the other guest units remain on for party streaming.

Re-join Party

You can enter again the Party Mode to continue the party streaming.

- Press the Party Mode button (PARTY MODE) to access the Party Mode menu.

  If your unit is the host, press the function knob when "**Host**" from the menu is selected. The unit is now in the Party Mode and stream audio to the other guest units (Make sure the Party Mode on the guest units still remain on).

  If your unit is a guest, select "**Guest**" from the menu and press the function knob to access the host units list. Then select your host unit name and press the function knob. Now the unit is in the Party Mode and play audio streamed from the host unit (Make sure the Party mode on the host unit still remains on).

Change the Host

You can switch to another host during party streaming.

- Repeat the steps described in the section "Set Party Mode" to create a new party streaming.

Troubleshooting

If you have problems using this product, check the following points before you request service. If you still have a problem, contact our Customer Service for further assistance.

Problem	Solution
Unit not responsive	Restart the unit by turning the vehicle off for a few seconds, then turning the vehicle back on. If the problem still persists, disconnect the unit from the source battery for a few minutes and then reconnect.
No power	Check that the battery and ground wires are correctly connected to provide power supply. ***(P.6)***
	Check that the power-on control wire (labeled "**REM-IN**") is connected to turn on the unit. ***(P.6)***
	Check that the switched source (e.g. ignition switch) which the power-on control wire is connected to is turned on.
	The fuse is blown. Replace with a new one with the same type and rating.
No sound/ Distorted sound	Check that your audio zone is not adjusted to the minimum volume level individually. ***(P.8)***
	Check that two battery wires are connected to the source battery to provide sufficient current for volume output. ***(P.6)***
	Check that playback is not paused, or turn up the volume.
	Incorrect source input. Select the correct sound source.
Bluetooth not connected / Streaming not possible	Check that Bluetooth on your mobile device is enabled.
	Make sure your mobile device is located in Bluetooth range.
	This unit is connected with another Bluetooth device. Switch the unit to pairing mode and connect to a second device. ***(P.11)***
Poor audio quality from Bluetooth connection.	Move your mobile device closer to the unit, or remove obstacles or sources of interference that are affecting Bluetooth reception.
USB not playable	Files are not supported, or the USB device is not compatible with the unit. Change the media files or USB device.

Specifications

Audio

Max output power ..... 22W RMS x 6

Speaker impedance ..... 4 - 8 Ω

Frequency response ..... 20 Hz - 20 kHz

Signal-to-noise ratio ..... >55 dB

RCA input sensitivity ..... 500 mV

Pre-amp outputs ..... 4V, full range
7-channel RCA outputs, mono subwoofer output

FM Radio

Frequency range ..... 87.5 – 107.9 MHz (USA)
87.5 – 108 MHz (Europe)

Frequency step ..... 200 kHz (USA)
50 kHz (Europe)

AM Radio

Frequency range ..... 530 – 1710 kHz (USA)
522 – 1620 kHz (Europe)

Frequency step ..... 10 kHz (USA)
9 kHz (Europe)

WB Radio

Frequency range ..... 162.400 – 162.550 MHz (NOAA)

Bluetooth

Bluetooth version 5.3

Bluetooth profiles ..... A2DP, AVRCP

Bluetooth frequency ..... 2400 - 2483.5 MHz

Transmission power ..... <20 dBm, Class 1

Transmission distance ..... Up to 328 ft /100m, in free field.

USB

Compatibility ..... Type A, USB 2.0 (High-Speed)

File system FAT32

USB storage supported ..... Max 32 GB

Phone charging current ..... 5 VDC, max 2.1A

Audio playback ..... MP3, WAV, FLAC (192 kHz/24 bit)

General

Power supply ..... 9 – 16 VDC

Current draw ..... Max 15 A

Current draw when powered off ..... Max 100 mA

Zero current draw memory ..... Retain radio presets, volume and sound settings in case of battery disconnected

Screen ..... 2.8", color LCD display

Ingress protection ..... IP66 (weather proof/dust proof)

Operating temperature ..... -4 to 158 °F (-20 to 70 °C)

Storage temperature ..... -22 to 176 °F (-30 to 80 °C)

Unit weight ..... 0.98 kg / 2.16 lbs

Dimension Drawings

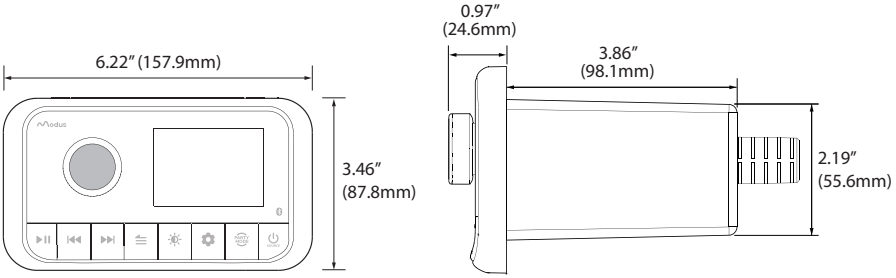

Specifications are subject to change without notice.

FCC Warning

This device complies with part 15 of the FCC rules. Operation is subject to the following two conditions: (1) this device may not cause harmful interference, and (2) this device must accept any inte rference received, including interference that may cause undesired operation.

Changes or modifications not expressly approved by the party responsible for compliance could void the user's authority to operate the equipment.

NOTE: This equipment has been tested and found to comply with the limits for a Class B digital device, pursuant to part 15 of the FCC Rules. These limits are designed to provide reasonable protection against harmful interference in a residential installation. This equipment generates uses and can radiate radio frequency energy and, if not installed and used in accordance with the instructions, may cause harmful interference to radio communications. However, there is no guarantee that interference will not occur in a particular installation. If this equipment does cause harmful interferenceto radio or television reception, which can be determined by turning the equipment off and on, the user is encouraged to try to correct the interference by one or more of the following measures:

- Reorient or relocate the receiving antenna.
- Increase the separation between the equipment and receiver.
- Connect the equipment into an outlet on a circuit different from that to which the receiver is connected.
- Consult the dealer or an experienced radio/TV technician for help.

Radiation Exposure Statement

This equipment complies with FCC radiation exposure limits set forth for an uncontrolled environment. This equipment should be installed and operated with minimum distance 20cm between the radiator and your body.