EZ® TATTOO

TATTOO STENCIL PRINTER

User Manual

Prior to using the product, please thoroughly review this manual to familiarize yourself with the proper usage procedures and safety precautions.

APPEARANCE AND COMPONENTS

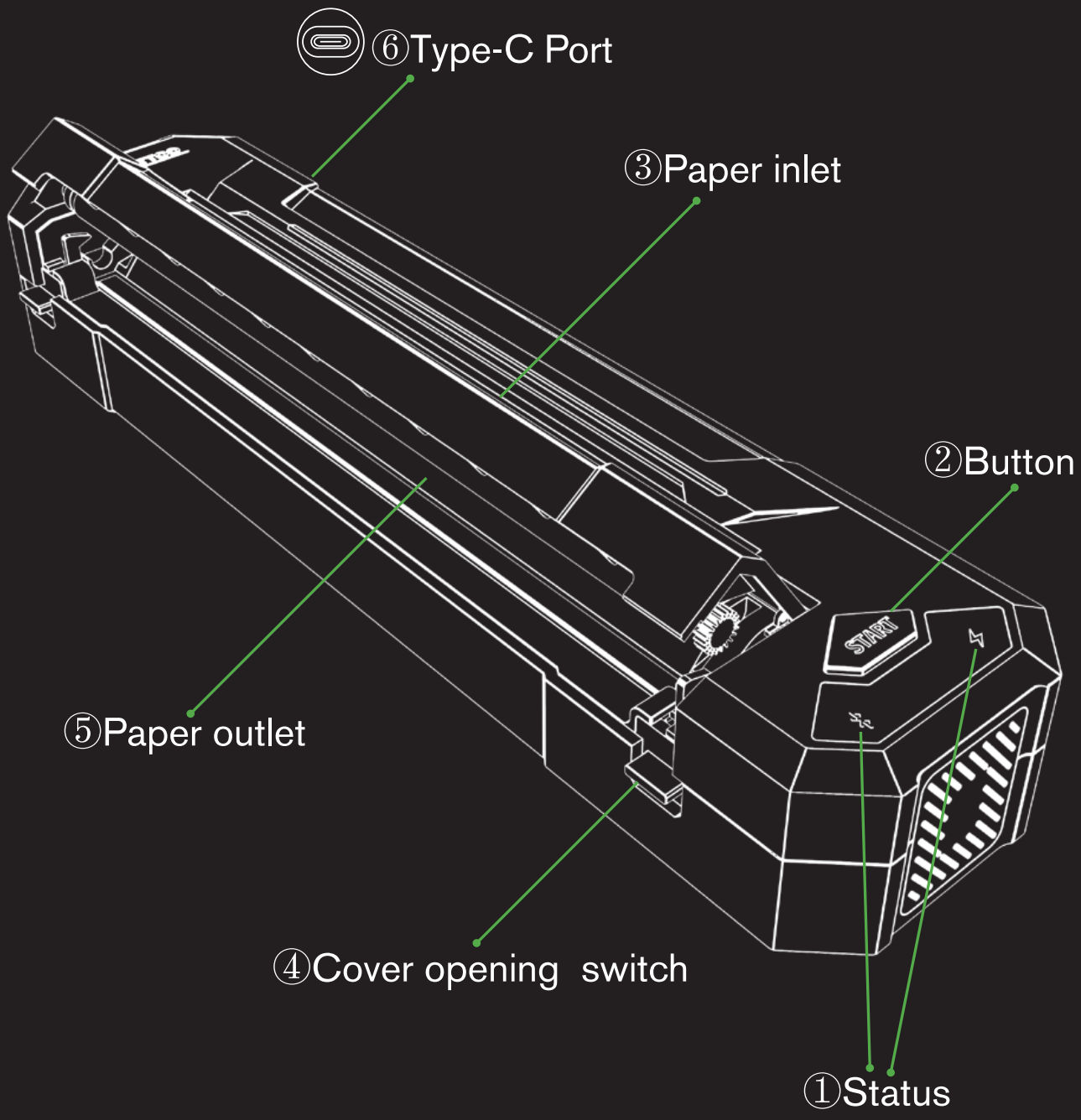

Warning

This device does not support fast charging. Please use the provided cable for charging.

Power on/off:
Press and hold the button until you hear a beep, then release it.

Charging indicator:
The red light remains on while charging and turns off once the device is fully charged.

Bluetooth Indicator:
A solid blue light indicates a successful Bluetooth connection, while a flashing blue light means the device is searching for a connection or is not currently connected.

Paper Feed Button(Start Button):
When the printer is turned on with paper loaded, lightly press the paper feed button to automatically advance 50mm of transfer paper.

Print a self test page:
If Bluetooth connection fails, insert thermal paper, double-click the button to print a self-test page, and scan the QR code to establish the connection.

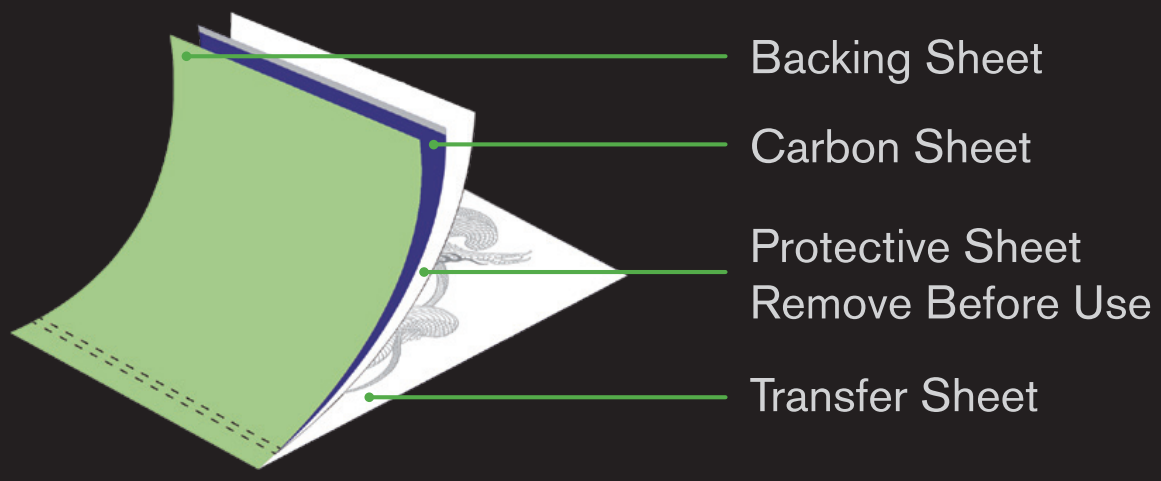

INSTRUCTIONS

To ensure high-quality printing, please refer to the following steps:

Press and hold the button until you hear a beep, then release it and insert the transfer paper.

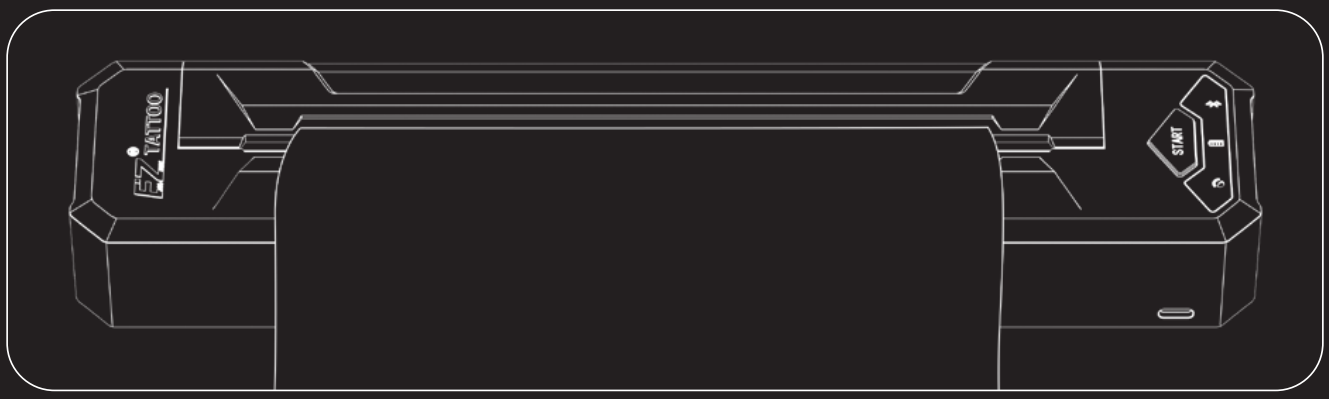

Notes for paper placement:

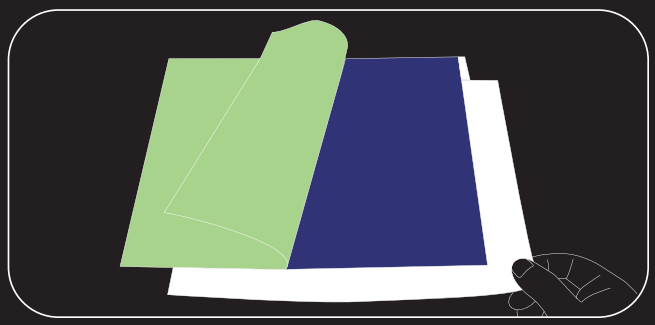

① Prepare four layers of transfer paper and remove the Protective sheet.

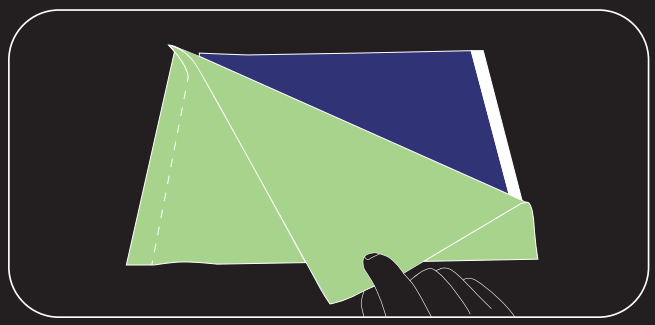

② Remove the backing paper and make a horizontal cut along the top adhesive point. Please ensure that the adhesive portion of the paper remains intact.

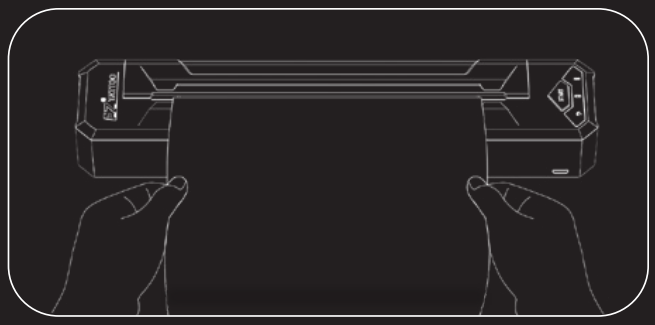

③ Prepare the printer by positioning the carbon sheet facing downward and the white transfer sheet facing upward. Place it along the top of the printer. The machine will automatically adjust the paper suction and connect to Bluetooth for printing.

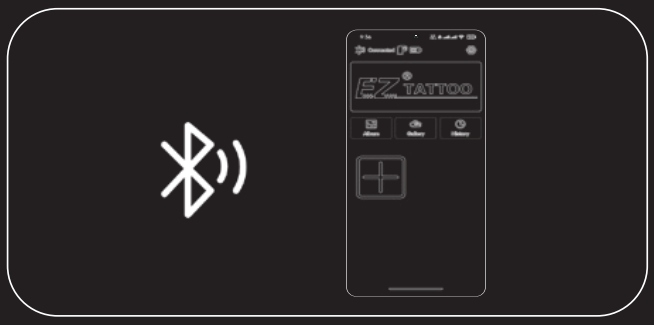

④ After inserting the transfer paper, prepare your phone (iOS or Android) to connect to the Printer. Once connected, you can start printing your desired pattern.

CONNECTION

APP download:

Search and download the "EZ TattooPrinter" application from theiOS app store.

Scan the QR code on the right to download the App.

FREQUENTLY ASKED QUESTIONS:

Q: No pattern after printing?

A: The transparent protective film on the transfer paper may not have been removed, or the transfer paper may not have been placed correctly.

Q: Print came out blurry?

A: The issue might be caused by low-quality transfer paper.
For optimal results, we recommend using EZ Stencil transfer paper.

Q: Why does the printer automatically shut down or print intermittently?

A: The issue could be caused by a depleted battery. Please ensure the battery is fully charged or connect the printer to a power source.

Q: The printer cannot be turned on or off normally, or the button is malfunctioning. What should I do?

A: Try resetting the printer. Locate the reset button at the bottom of the device, press and hold it for 5 seconds, then release. After resetting, power the printer back on and check if the issue is resolved. If the problem persists, please contact customer support for further assistance.

PRECAUTIONS

Automatically feed paper when placing it:

Attention: Due to the different materials of transfer paperand the varying softness and hardness of the top, in orde!to prevent sticking during printing, when placing transferpaper, be sure to smooth it out and place it in the center.

Printing precautions:

1. It is recommended to avoid printing in areas with high humidity or excessive dust.
2. If the thermal head overheats after printing, please avoid touching it directly.
3. To prevent static electricity from damaging the thermal head, please avoid touching it.
4. To ensure high-quality printing, avoid continuous printing for extended periods.

Precautions during charging:

1. Avoid inserting or removing the power cord with excessive force.
2. Please disconnect the power supply once charging is complete.
3. Please use the provided power cord for charging. Using unauthorized cords may cause the printer to overheat, ignite, or burn out.
4. Avoid charging the device in high-temperature

5. Using an incorrect battery type may result in a risk of explosion. Unauthorized battery replacement is strictly prohibited and will void the warranty.

PRINTER SPECIFICATION

Printing Width
210mm

Paper Size
A4 Transfer Paper

Connection Method
USB+Bluetooth

High Resolution
203DPI

Size
315x76x53mm

Battery Capacity
2500mAh

Power Input
5V---2A

Support System
Android & i0S & Windows

WARRANTY INFORMATION

Tattoo Stencil Printer: 1 Year Warranty

Warranty Coverage:

This Warranty Covers The Tattoo Stencil Printer Purchased From Our Online Store Or Authorized Distributors Worldwide. The Warranty Period Starts From The Date Of Purchase.

What is not covered by the warranty:

Damage To The Product Caused By Human Factors; Product Damage Resulting From External Electrical Failures Or Accidents.

Warranty Claim Process:

Please send your purchase receipt to our support team at support@eztattooing.com.

www.eztattoosupply.com

eztattooing

EZ® TATTOO

A4 热敏转印机

使用说明书

在使用产品前，请您仔细阅读本说明书，它可以帮助您轻松掌握本产品的使用方法和注意事项。

FCC Warnning:

This equipment has been tested and found to comply with the limits for a Class B digital device, pursuant to part 15 of the FCC Rules. These limits are designed to provide reasonable protection againstharmful interference in a residential installation. This equipment generates, uses and can radiateradio frequency energy and, if not installed and used in accordance with the instructions, maycause harmful interference to radio communications. However, there is no guarantee thatinterference will not occur in a particular installation. If this equipment does cause harmfulinterference to radio or television reception, which can be determined by turning the equipmentoff and on, the user is encouraged to try to correct the interference by one or more of thefollowing measures:

- Reorient or relocate the receiving antenna.
- Increase the separation between the equipment and receiver.
- Connect the equipment into an outlet on a circuit different from that to which the receiver is connected.
- Consult the dealer or an experienced radio/TV technician for help.

Caution: Any changes or modifications to this device not explicitly approved by manufacturer could void your authority to operate this equipment.

This device complies with part 15 of the FCC Rules. Operation is subject to the following two conditions:

(1)This device may not cause harmful interference, and (2) this device must accept any interference received, including interference that may cause undesired operation.

This equipment complies with FCC radiation exposure limits set forth for an uncontrolled environment. This equipment should be installed and operated with minimum distance 0cm between the radiator and your body.

外观与组件

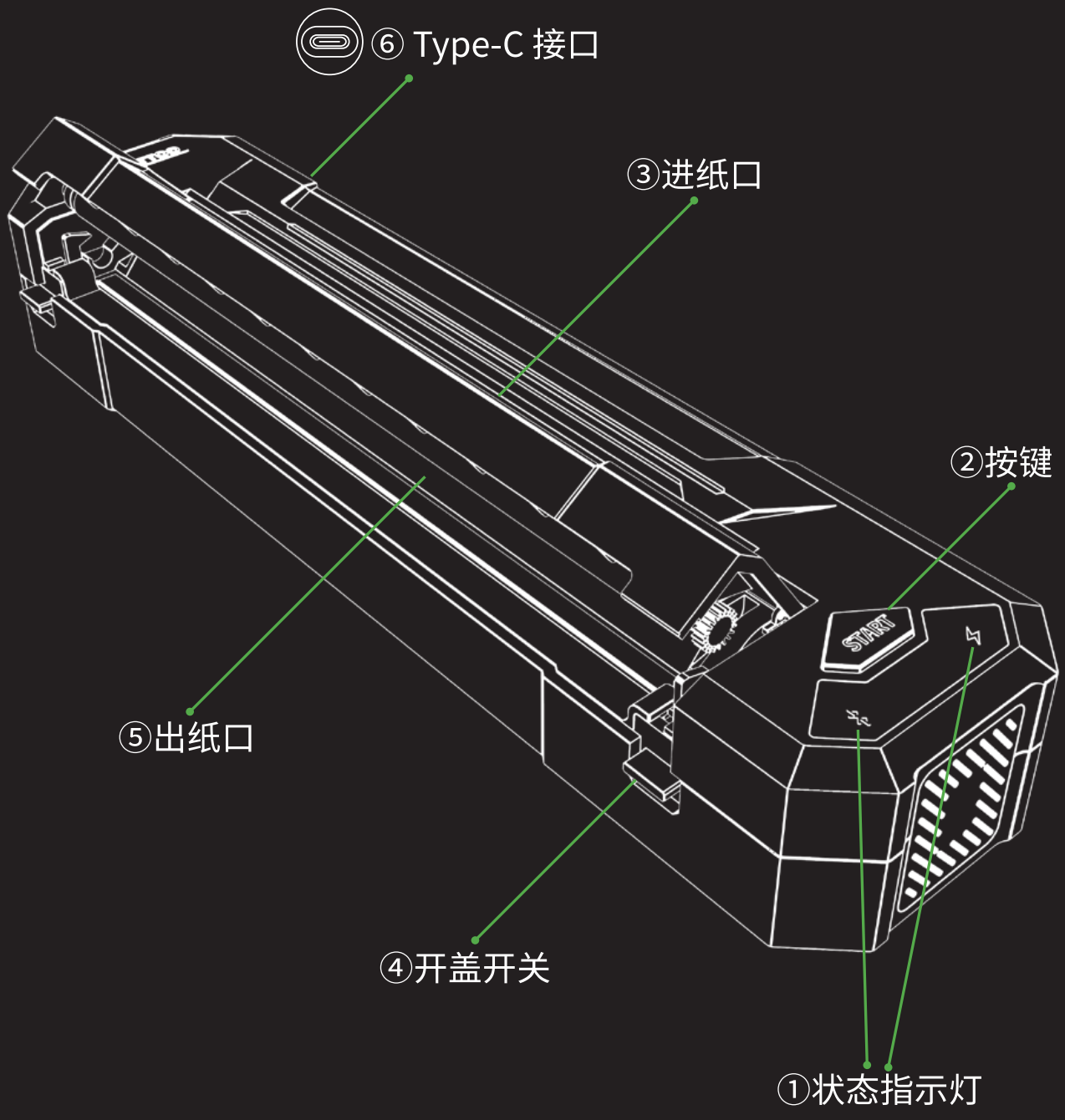

警告

此设备不支持快速充电。请使用提供的电缆充电。

情况	操作
开机	按住按键，听到蜂鸣后松手
关机	按住按键，听到蜂鸣后松手
充电灯	充电中，红灯常亮 充满电，红灯熄灭
蓝牙状态灯	蓝牙连接成功，蓝色灯常亮 蓝牙未连接，蓝色灯闪烁
走纸键	开机有纸状态下，轻按一下按键， 转印机走纸50mm
自检页	如果无法连接蓝牙，请放入热敏纸， 双击按键， 然后扫描自检页上的二维码即可连接蓝牙

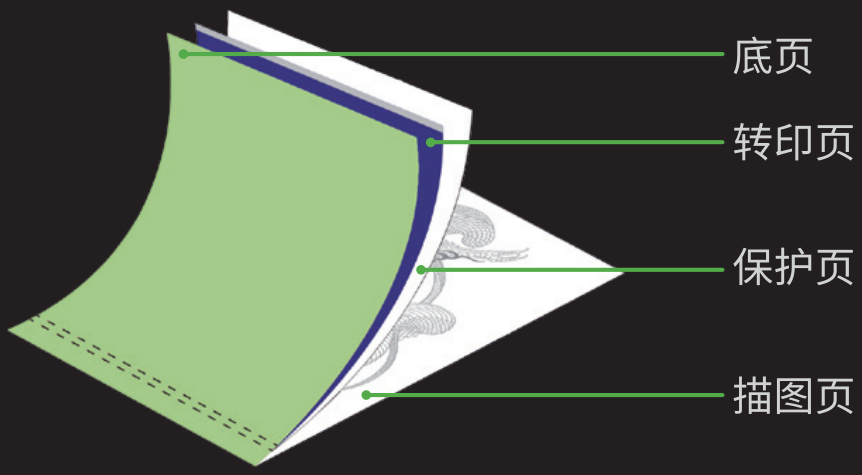

操作指引

为了确保高质量打印，请参考以下步骤：
长按按键听到蜂鸣后松手，放入转印纸。

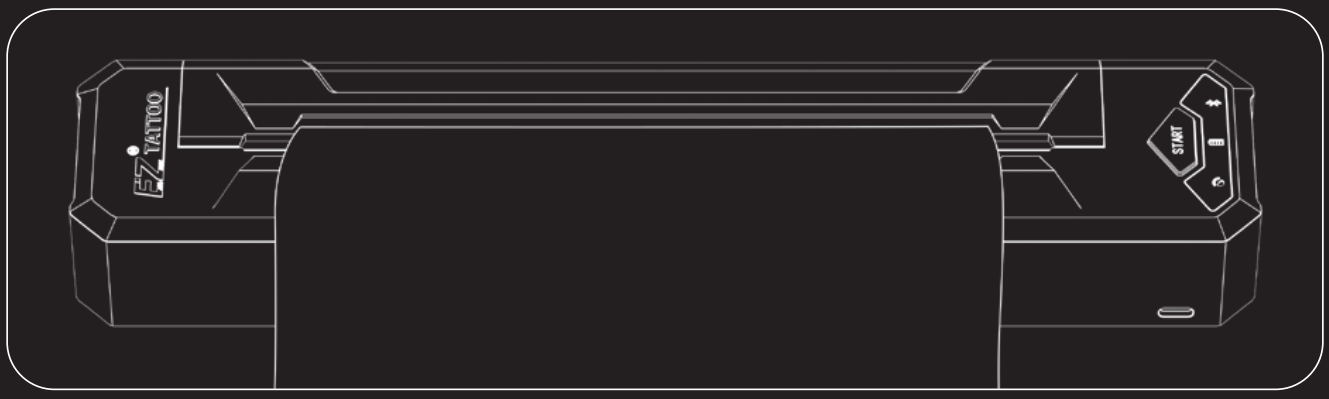

纸张放入注意事项：

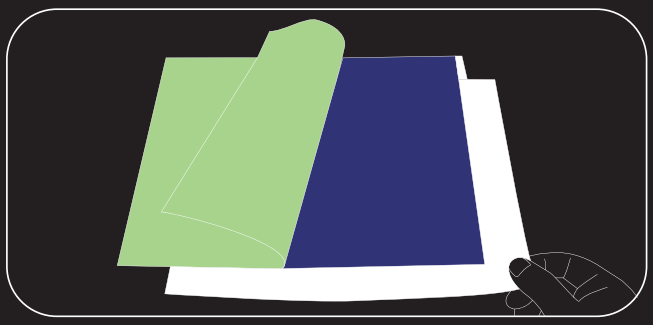

① 准备好四层转印纸，取出隔离纸。

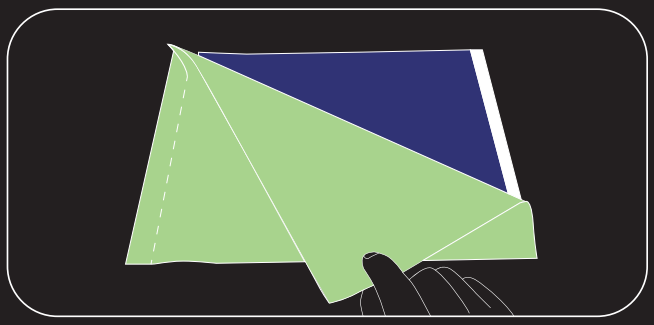

② 取下底纸，沿顶部粘合处水平切割底纸。请注意，纸张的粘合部分应保持完好。

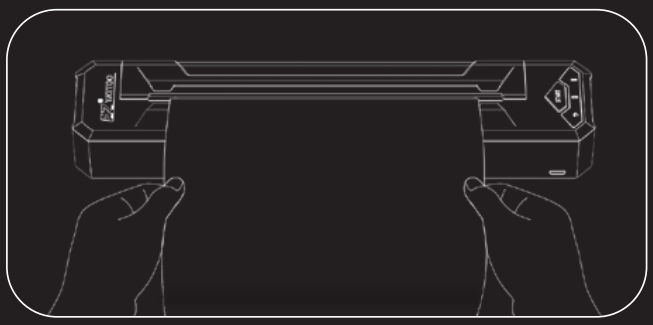

③ 准备好打印机，将碳带面朝下，将白色转印纸面朝上，沿顶部放入打印机，机器会自动吸纸校正，然后连接蓝牙进行打印。

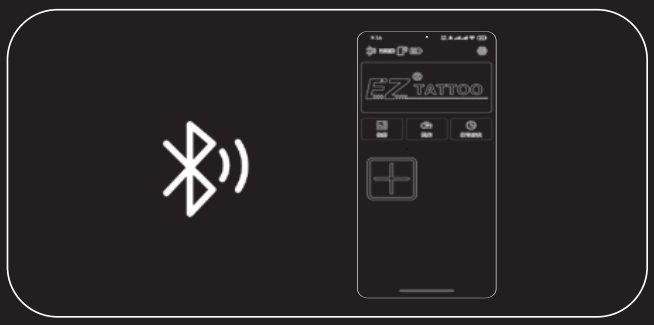

④ 安装转印纸后，请准备好您的手机(iOS或Android) 以连接到机器。开始打印您想要的图案。

智能互联

应用程序的下载方式：

从iOS 应用商店搜索并下载"EZ TattooPrinter"应用程序。

扫描右侧的二维码下载应用程序。

常见问题解答

问：印刷后没有图案？
答：可能是转印纸上的透明保护膜未被移除，或者转印纸放置不正确。

问：打印出来的图案模糊？
答：问题可能是由于转印纸质量不佳引起的。为了获得最佳效果，我们推荐使用EZ Stencil转印纸。

问：为什么打印机会自动关闭或间歇性打印？
答：问题可能是由于电池电量不足引起的。请确保电池已充满电或将打印机连接到电源。

问：打印机无法正常开关机，或者按钮失灵，我该怎么办？
答：尝试重置打印机。找到设备底部的重置按钮，按住5秒钟后松开。重置后，重新启动打印机并检查问题是否解决。如果问题依旧存在，请联系客服支持以获得进一步帮助。

注意事项

放纸的时候自动入纸

注意:由于转印纸材质不同,顶部软硬度也不同,为了防止打印粘纸,放入转印纸时,一定要把转印纸抚抹平整且居中放置。

打印注意事项:

1.建议不要在高湿度和多尘的区域打印。
2.如果打印后打印头过热,请不要直接触摸。
3.为防止静电损坏打印头,请勿触摸打印头。
4.为保证高质量打印,请勿长时间连续打印。

充电时注意事项:

1.请勿用力插入或拔下电源线。
2.充电后请断开电源。
3.请使用原装电源线充电,否则打印机可能会过热、起火并烧坏。
4.请勿在高温环境中充电。
5.如果更换了错误类型的电池,存在爆炸风险,禁止私自更换电池,私自更换电池将失去保修。

设备参数

打印宽度
210mm

纸张尺寸
A4 Transfer Paper

设备连接
USB+Bluetooth

打印分辨率
203DPI

产品尺寸
315x76x53mm

电池容量
2500mAh

输入电压
5V---2A

支持系统
Android & i0S & Windows

保修信息

A4热敏转印机: 1年保修

保修范围:
此保修覆盖了从我们的在线商店或全球授权经销商购买的A4热敏转印机。保修期从购买日期开始。

保修不覆盖以下内容:
由人为因素造成的产品损坏;由外部电力故障或事故造成的产品损坏。

保修索赔流程:
请将您的购买收据发送至我们的售后团队,邮箱为support@eztattooing.com。

www.eztattoosupply.com

eztattooing