GREEN FROG SYSTEMS®
SOLAR LIGHTING INNOVATION

GFS-BLE-5.0

GFS Bluetooth Module
Installation & User Manual

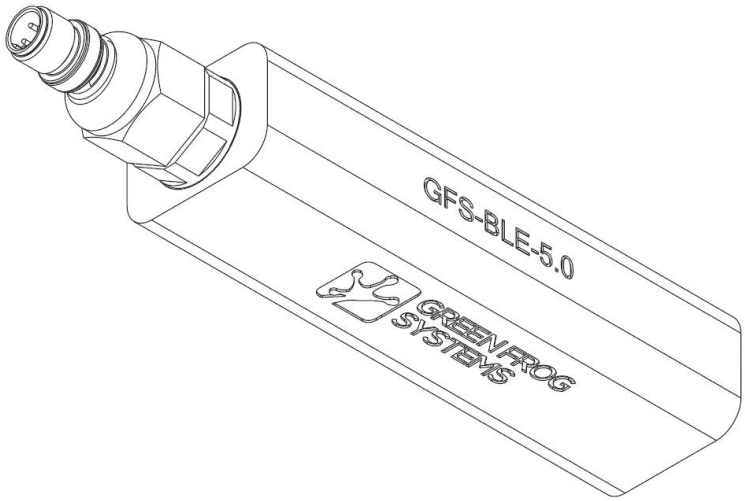

VERSION 0.1

Table of Contents

INSTALLATION OVERVIEW **2**
PAIRING PROCESS **2**
LAUNCHING APP **2**
REGISTER BTM **3**
Device Name 3
Controller 3
ID Number 3
Select Bluetooth Gateway 4
SOLAR MONITOR AND CONTROL UI **5**
Parameter Settings 5
Load Parameter Settings 6
Operation Mode Settings 6
Device Parameter Settings 12
Manual ON OFF 13
BTM HARDWARE INSTALLATION GUIDE **14**
AeromaX 14
Defender 14
GFSX00 15
Aspire XXX 15
MSL 16
TROUBLESHOOTING GUIDE **17**

INSTALLATION

OVERVIEW

GFS-BLE-5.0 Bluetooth Module (BTM) enables wireless communication between GFS Solar Lights and the Bluetooth APP. Through the app, users can access real-time operational data such as solar panel output, battery status, and LED performance. The APP also allows users to modify operation modes and adjust LED power settings to optimise light performance for specific applications.

BTM must be connected to the GFS Solar Light and paired with the app before operation. For detailed pairing instructions, refer to steps outlined below.

PAIRING PROCESS

Activate BTM by connecting the 4-pin connector to the programming port of the solar light. Refer to page 14 “BTM Hardware Installation Guide” section for the cable connections on the specific GFS product.

To avoid interference during the pairing process, it is recommended to power up only one BTM at a time to prevent confusion when selecting the correct MAC address. Ensure that the BTM is within 6 meters before initiating the pairing process.

LAUNCHING APP

Open the App, click the “+” button to search for new BTM.

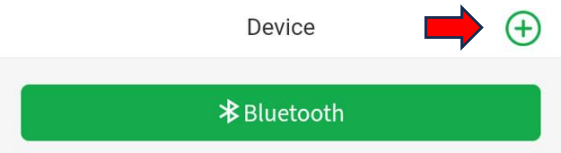

REGISTER BTM

Fill up below parameters to begin pairing process.

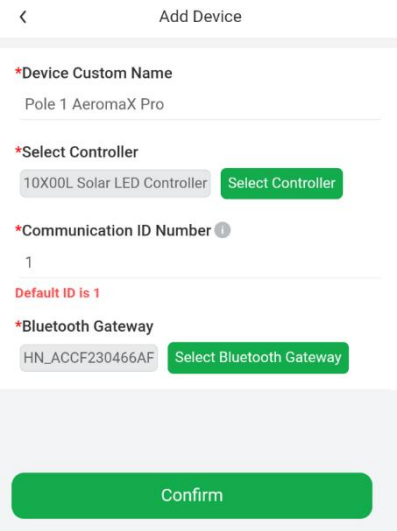

Device Name

Assign a name to the solar light for easy identification. It is recommended to use a combination of the pole number and product name, e.g., "Pole 1 AeromaX."

Controller

Choose the appropriate solar controller based on GFS product.

- Select **10X00L** for Solar Lights (e.g. AeromaX, Defender, GFSX00, Aspire XXX)
- Select **10X00** for ESS systems.
- *If unsure of the model, please contact GFS for assistance.*

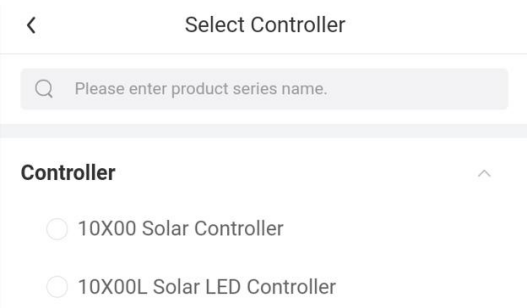

ID Number

Use default **ID number 1**, unless advised otherwise by GFS.

Select Bluetooth Gateway

Click on “Select Bluetooth Gateway” and “Add” BTM MAC address that you wish to pair with.

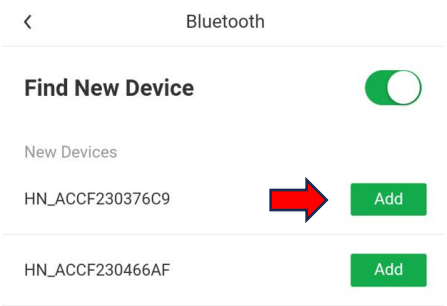

Pairing: Ensure that the BTM is connected to the solar light, and the solar light / solar controller is switched ON. Then, click “Confirm” to initiate the pairing process.

Successful Pairing: Once the pairing is successful, you will be directed to the Solar Monitor and Control UI.

SOLAR MONITOR AND CONTROL UI

Real-Time Data Overview

This section provides an overview of the system's status. The load switch (ON/OFF) button is functional only when the system is set to manual mode.

The solar panel, battery, and load voltage, current, and wattage are displayed below. Detailed system information can be accessed via each dropdown menu.

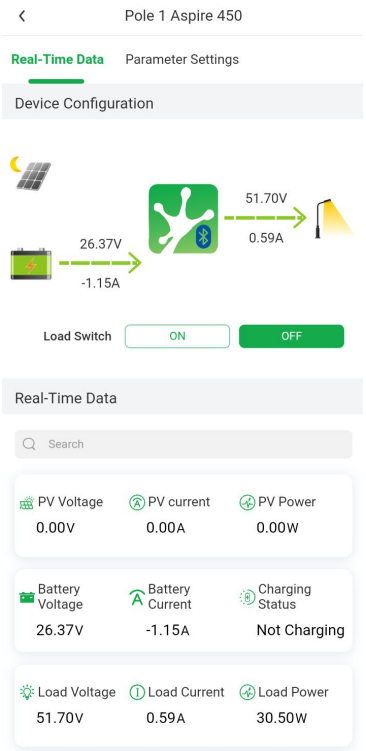

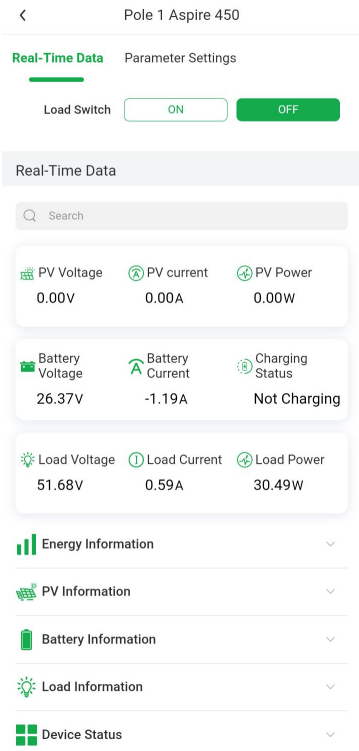

Parameter Settings

To adjust system parameters, click on "Parameter Settings." There are four settings available:

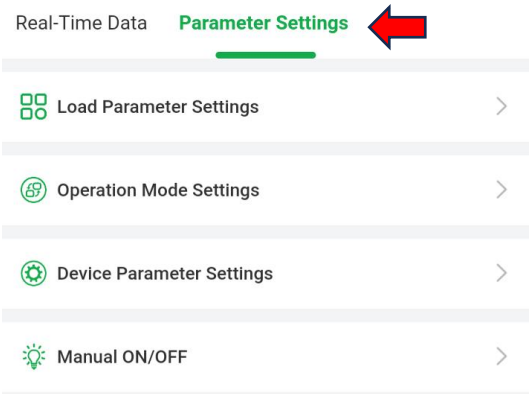

Load Parameter Settings

In Load Parameters Settings - users able to adjust LED current /power levels.

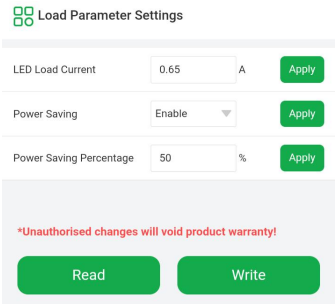

Important: Consult with GFS before making any changes to the default settings, as unauthorized modifications may void the product warranty.

- Do **NOT** set the LED current above 2A, as this can damage the LED chip.
- Enable power-saving mode to reduce LED power consumption when the system detects low battery voltage.

Operation Mode Settings

There are five LED operation modes in solar controller:

- PV Voltage + Before Sunrise
- PV Voltage + Timer Mode 1
- PV Voltage
- Manual Mode
- Real-Time Control

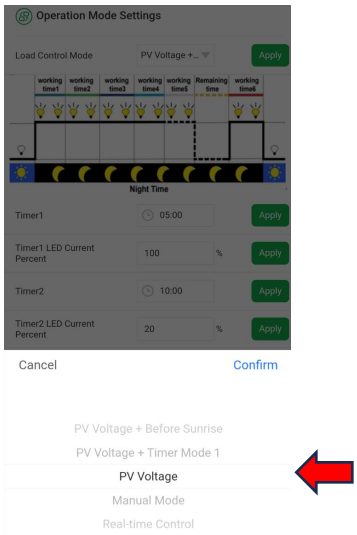

Important: Consult with GFS before making any changes to the default settings, as unauthorized modifications may damage the product and void the warranty.

PV Voltage + Before Sunrise

In this mode, solar controller allows up to 6 timers, each of which can be set in hours, minutes, and percentage of LED current/power.

Example:

With below setting, solar light will turn on at dusk and operate at 100% of the current/power set in the load parameters for 5 hours. After timer 1 expires, the LED will dim to 20% for 10 hours or until sunrise is detected.

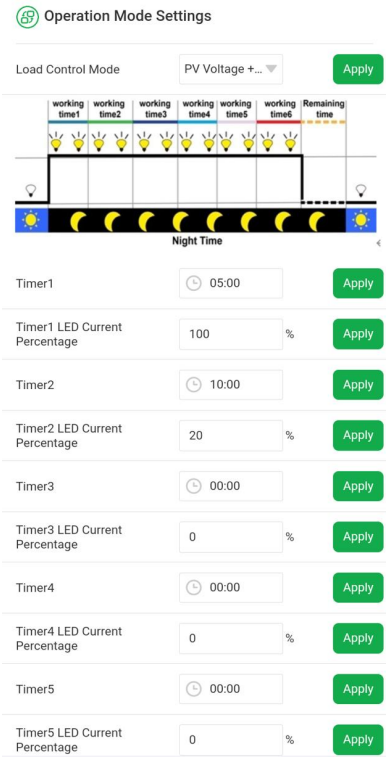

PV Voltage + Timer Mode 1

In this mode, solar controller allows up to 6 timers, each of which can be set in hours, minutes, and percentage of LED current/power with Timer 6 can be configured to turn ON the LED X hours before sunrise.

Example:

With following setting, solar light will turn on at dusk and operates at 100% for 5 hours, then turns off after timer 1 expires. It will turn back on to 100% one hour before sunrise. The solar controller estimates sunrise time by measuring the solar panel voltage from the previous night. A 24 hours learning period is required for the solar controller to predict the next day's sunrise.

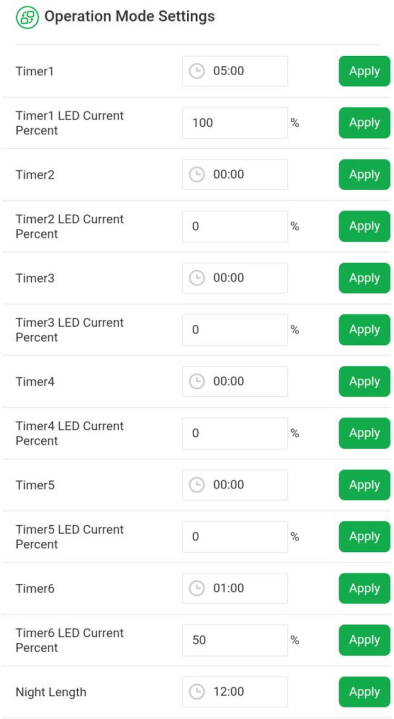

PV Voltage

In this mode, solar light turns on and off based on the solar panel voltage.

Example:

With following setting, solar light will turn on when the solar panel voltage drops below 5V (dusk) and will turn off (dawn) after a 1-minute delay when the solar panel voltage rises above 6V.

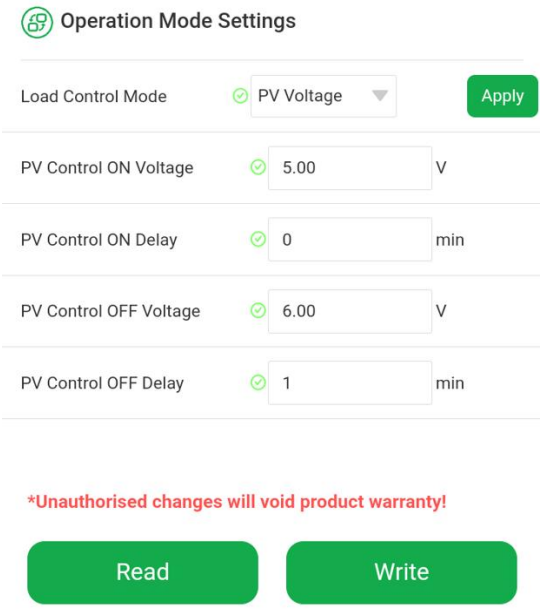

Manual Mode

In this mode, solar light can be turned ON or OFF manually, regardless of solar panel status.

Example:

With following setting, solar light remains off until the user presses the ON button in Real-Time Data Overview, at which point it will turn on at 50% of the value set in the load parameters.

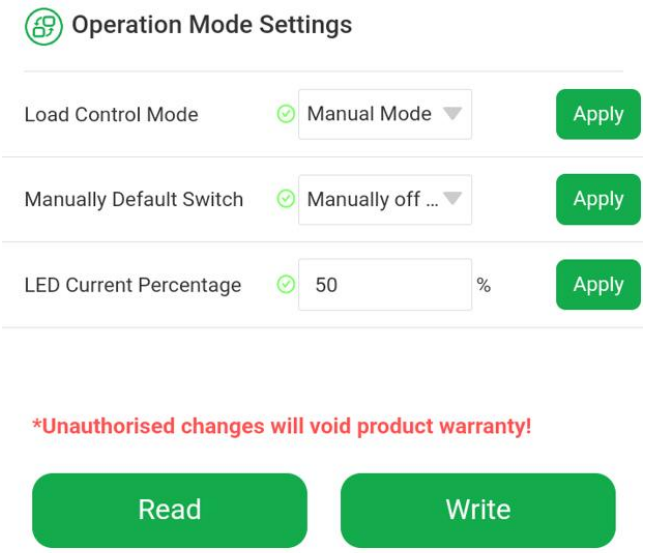

Real-Time Control

In this mode, solar light operates based on the real time clock set within the solar controller. It is important to ensure the solar controller real time clock is updated to local time when using this mode. The real time clock can be adjusted in Device Parameter Settings.

Example:

With the following settings, the solar light will turn ON at 80% brightness between 6:30 PM and 10:00 PM. The LED power will reduce to 20% between 10:00 PM and 5:00 AM, then ramp back up to 80% between 5:00 AM and 7:00 AM. This operation is controlled by the real-time clock stored within the solar controller and will function independently of solar panel status in day or nighttime.

Important: Consult with GFS beforehand to ensure the LED ON / OFF time and power is set to an appropriate level, taking into account solar energy generation during rainy or cloudy days and the battery capacity.
Overdriving the system may cause the battery to constantly fully discharge and shut down, which can disrupt the internal clock in the solar controller, leading to the LED turning ON/OFF at incorrect times.

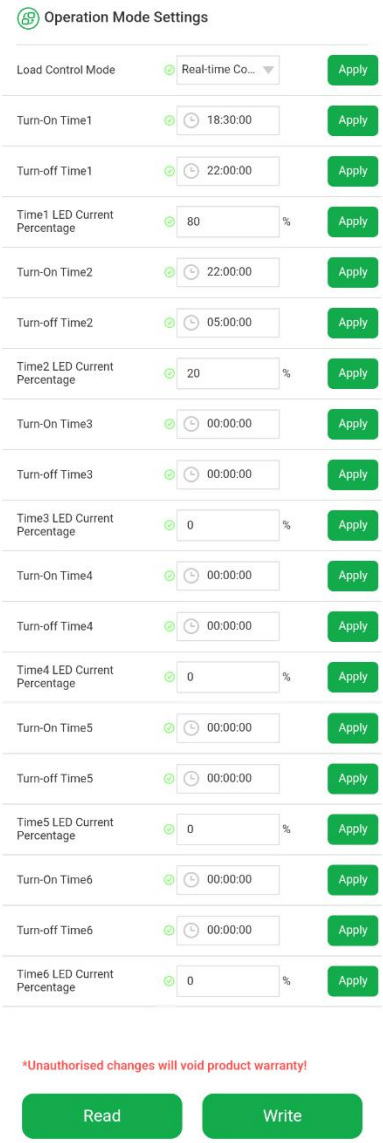

Device Parameter Settings

In Device Parameter Settings, user able to adjust the maximum temperature set point. Solar controller will shut down to protect battery and other electronics when it detects that the temperature has exceeded maximum set point.

When the Operation Mode is set to "**Real-Time Control**", it is important to ensure the solar controller internal real time clock is updated to the local time. Click on the calendar icon as shown in the following figure, select the correct year, month, date, and time, then click 'Write' to synchronise the time with the solar controller.

Important: Do not change temperature limit without written approval from GFS as it may degrade or damage the product and void the warranty.

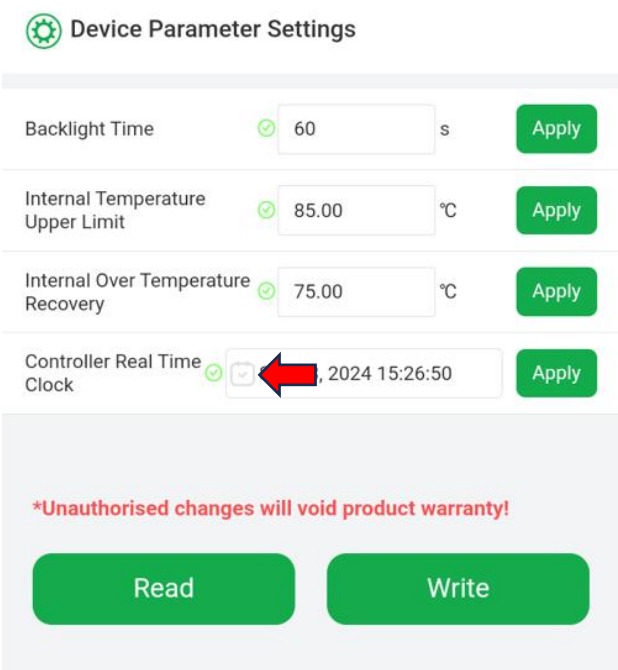

Manual ON OFF

In Manual ON / OFF – The user can manually control the solar controller's output, turning it ON or OFF independently of the solar panel status. To use the ON/OFF button in the app, the Operation Mode Settings must be configured to "Manual Mode"

Important: If the solar controller is set to ON mode, the LED will remain illuminated both day and night, which could cause the battery to over discharge.
To avoid excessive battery drain and degradation, it is important to either turn off the solar controller output or revert to the default Auto ON / OFF profile

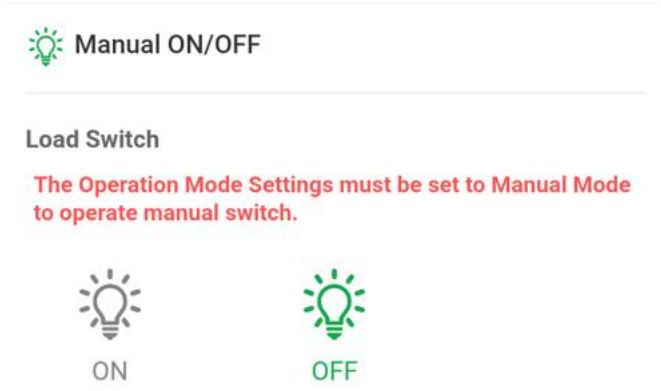

BTM HARDWARE INSTALLATION GUIDE

AeromaX

Remove AeromaX solar panel and locate the 4-pin programming cable. Attach the cable to the Bluetooth module and secure it by turning clockwise to ensure a watertight connection.

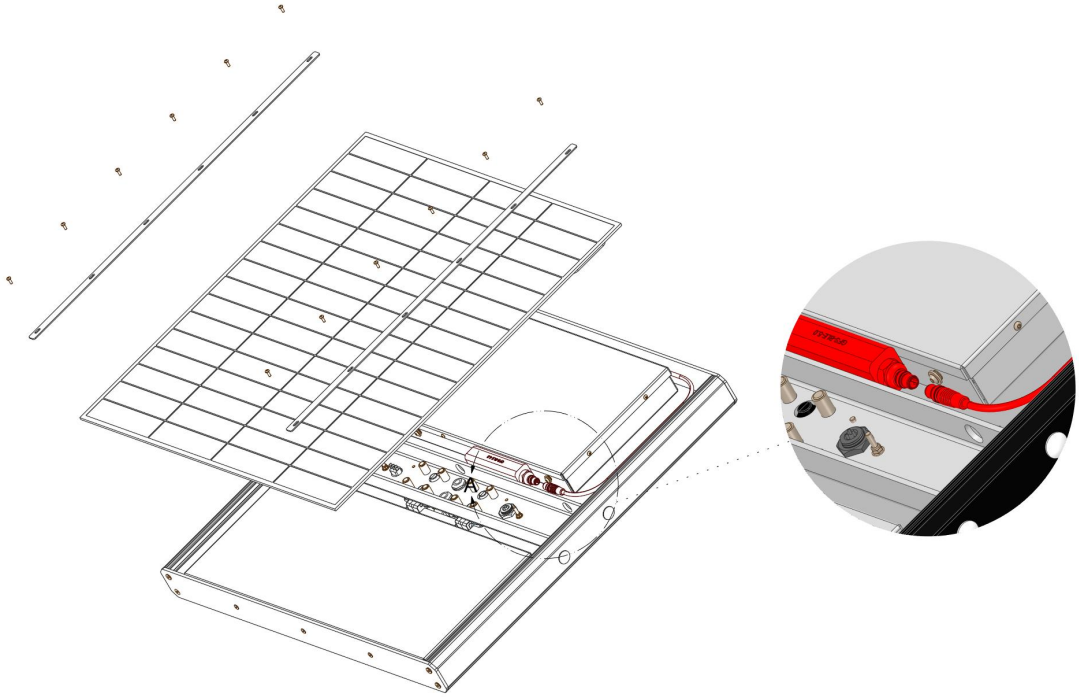

Defender

Remove Defender rear housing and locate the 4-pin programming cable. Attach the cable to the Bluetooth module and secure it by turning clockwise to ensure a watertight connection.

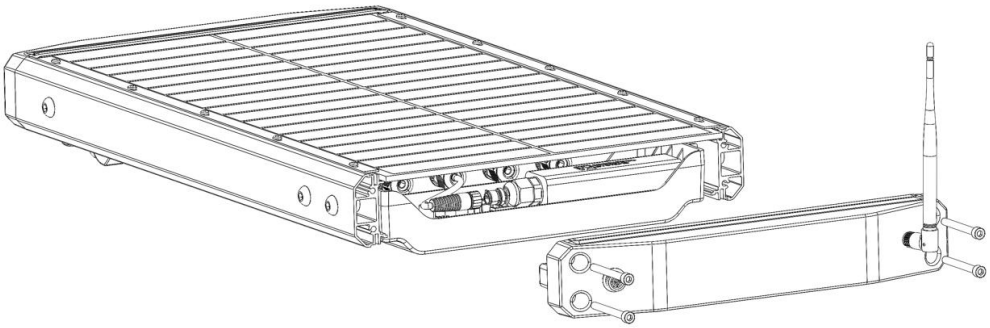

GFSX00

Remove GFSX00 battery box door, locate the 4-pin programming cable from solar charge controller. Attach the cable to the Bluetooth module and secure it by turning clockwise to ensure a watertight connection.

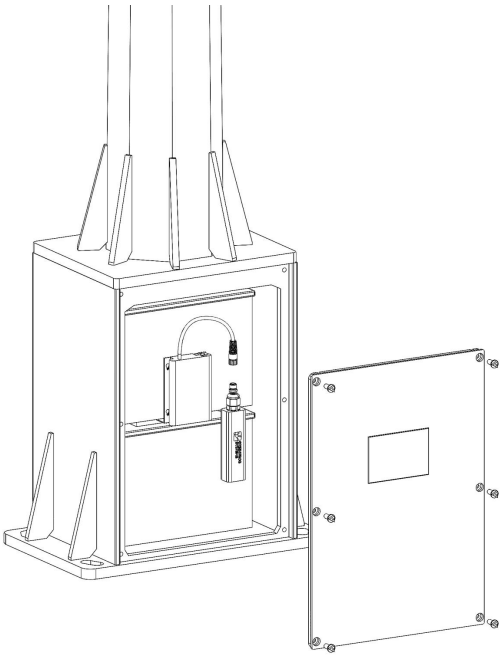

Aspire XXX

Remove Aspire battery box door, locate the 4-pin programming cable from solar charge controller. Attach the cable to the Bluetooth module and secure it by turning clockwise to ensure a watertight connection.

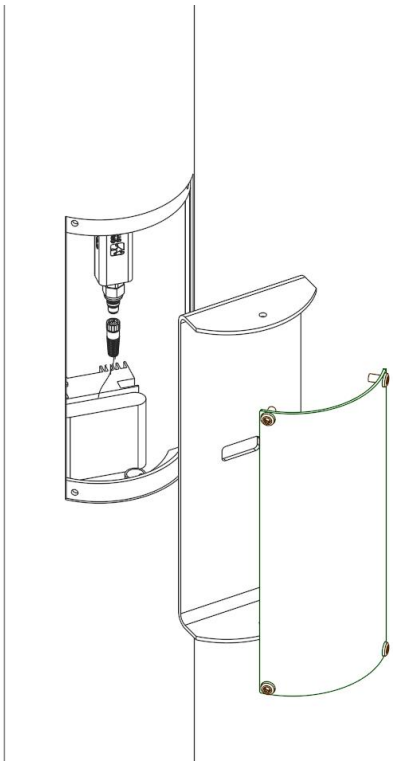

MSL

Remove MSL LED housing and locate the 4-pin programming cable. Attach the cable to the Bluetooth module and secure it by turning clockwise to ensure a watertight connection.

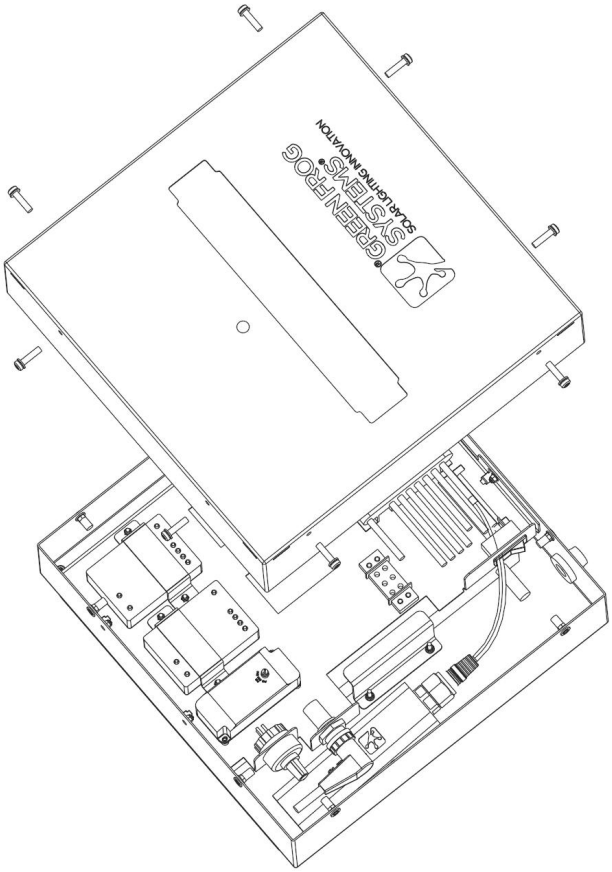

TROUBLESHOOTING GUIDE

Issue	Possible Cause(s)	Resolution
No Bluetooth found	Incorrect BTM connected	Check MAC address sticker on BTM, make correct BTM is connected
	Solar light / controller / BTM not power up	Check solar light / controller power status
	APP / Software Error	Restart APP or smartphone
	BTM is out of range	Make sure BTM and smartphone with within 6m
Load Parameter Setting option not available in APP	Incorrect solar controller	Select correct controller 10X00L within APP
LED does not turn ON	Incorrect operation mode	Check load and operation mode setting
	Hardware / connection fault	Check solar light power status and LED cable / hardware connection
LED turn ON / OFF at incorrect time	Controller Real Time Clock out of sync	Update controller Real Time Clock via “Device Parameter Settings

GREEN FROG SYSTEMS®
SOLAR LIGHTING INNOVATION

ASIA PACIFIC

503 Cross Keys Rd.
Cavan, South Australia 5094

+61 (0)8 7200 3909
info@greenfrogsystems.com.au

USA / AMERICAS

Corporate Office / Warehouse

1507 Capital Avenue, Suite 102.
Plano, Texas 75074

1.214.838.7010
info@greenfrogsystems.com

West Coast Office

1800 Vine Street, Los Angeles,
California 90028

1.213.550.5650

East Coast Office

111 North Orange Avenue,
Orlando, Florida 32801

1.321.250.3033

AUSTRALIA

GLOBAL

We print on 100% recycled paper. Wherever possible, keep it green and on the screen.

FCC Caution.

This device complies with part 15 of the FCC Rules. Operation is subject to the following two conditions: (1) This device may not cause harmful interference, and (2) this device must accept any interference received, including interference that may cause undesired operation.

Any Changes or modifications not expressly approved by the party responsible for compliance could void the user's authority to operate the equipment.

Note: This equipment has been tested and found to comply with the limits for a Class B digital device, pursuant to part 15 of the FCC Rules. These limits are designed to provide reasonable protection against harmful interference in a residential installation. This equipment generates uses and can radiate radio frequency energy and, if not installed and used in accordance with the instructions, may cause harmful interference to radio communications. However, there is no guarantee that interference will not occur in a particular installation. If this equipment does cause harmful interference to radio or television reception, which can be determined by turning the equipment off and on, the user is encouraged to try to correct the interference by one or more of the following measures:

-Reorient or relocate the receiving antenna.

-Increase the separation between the equipment and receiver.

-Connect the equipment into an outlet on a circuit different from that to which the receiver is connected.

-Consult the dealer or an experienced radio/TV technician for help.

*RF warning for Portable device:

The device has been evaluated to meet general RF exposure requirement. The device can be used in portable exposure condition without restriction.