Wireless Calling System

1. Functional Diagram

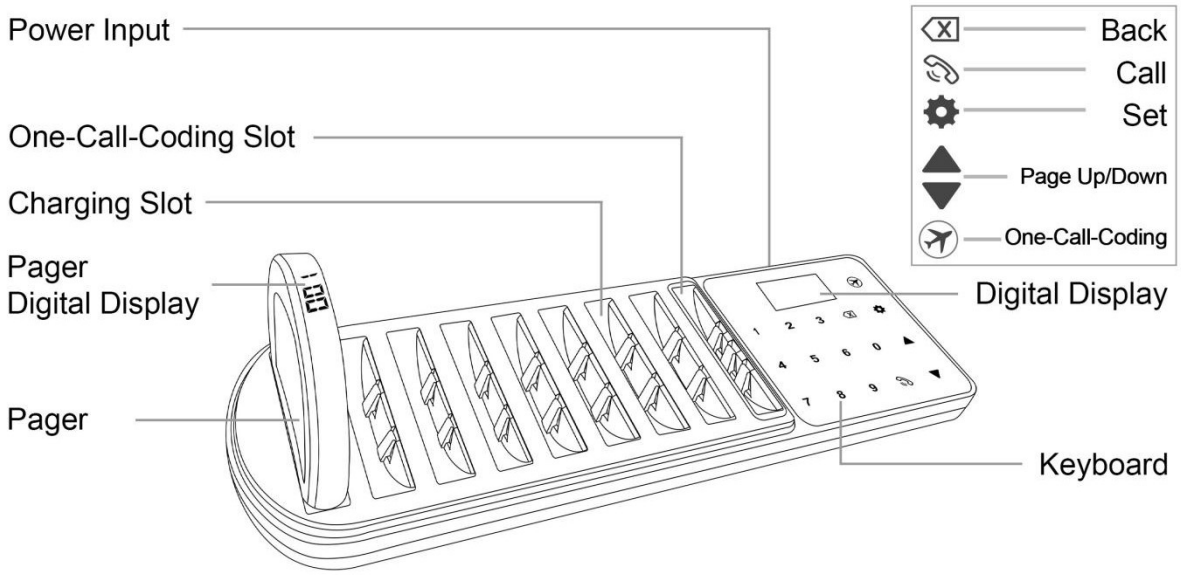

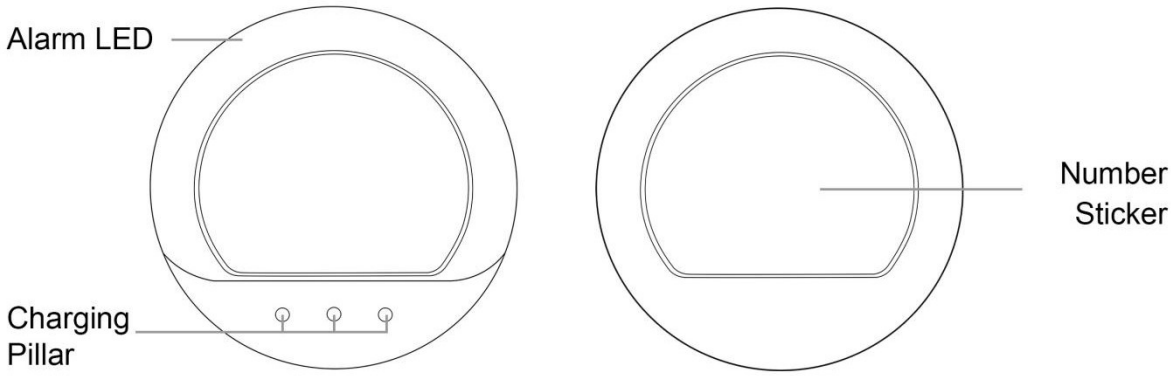

2. Parameter*

Transmitter		Pager	
Input Power	DC12V/2A	**Battery**	Li-ion 3.7V 200mAh
Frequency	433.92MHz	**Frequency**	433.92MHz
Transmit Power	+26dBm	**Standby Current**	<15mA
Standby Power	<1W	**Standby Duration**	20h
Modulation Type	OOK	**Sensitivity**	-115dBm
Slots	8 Charging Slots + 1 Quick-Coding slot	**Max Distance**	500m in open area
Max Capacity	998 pagers	**Dimensions**	ϕ80*12mm
Dimensions	290*93*31mm	**Material**	ABS
Material	ABS	**Prompt Mode**	Vibration/Beep/Flash
Keyboard	Touching Pad	**Alarm Time**	1-999s

*The parameters were measured in laboratory. They may vary depend on using cycles and environment.

3. Instruction

A. Before using

1.

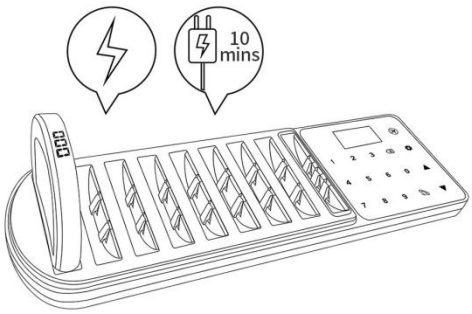

Please charge for more than 10 mins.

2.

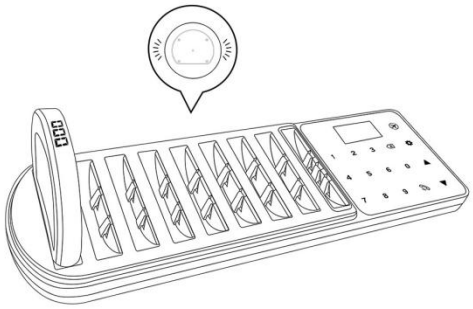

LEDs fast flash during charging, while stay on when fully charged.

B. Normal coding (To code multiple pagers)

1.

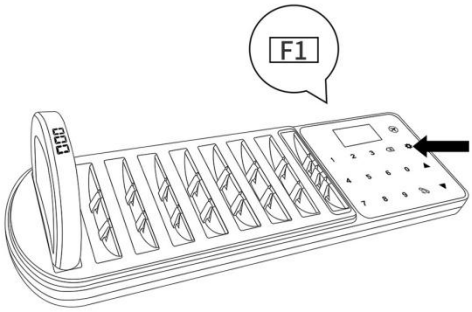

Long press“SET”,“F1” is displayed.

2.

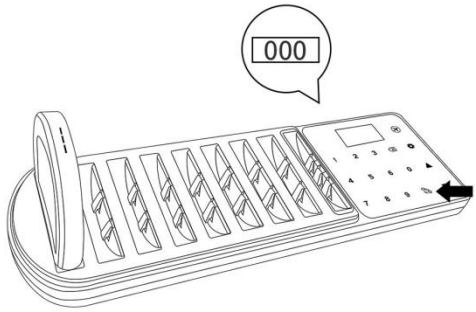

Press ,charging LEDs on pagers turn off,--- flashes on pagers. 000 flashes on transmitter.

3.

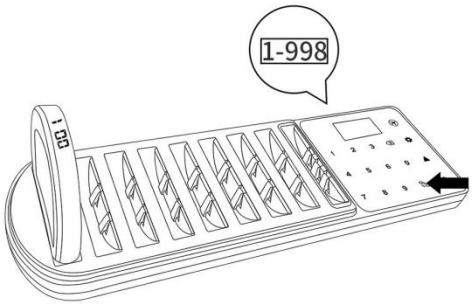

Input the number(1-998)and press to confirm, and all pagers on the charging base will display the number and flash.

4.

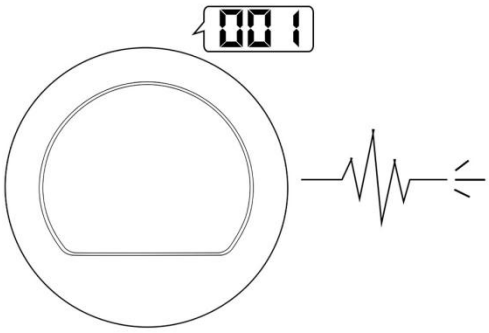

Pick up the pager and it short beeps, code matching is done.
Repeat above steps to program other pagers.

C. One-Call-Coding (To code pagers one-by-one)

1.

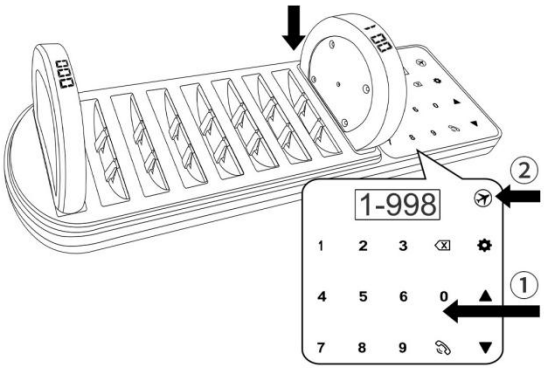

Place the pager in the One-Call-Coding slot,the pager enters the code matching state.Input the number (1-998)and press to confirm, and the pager on the One-Call-Coding slot will display the number and flash.

2.

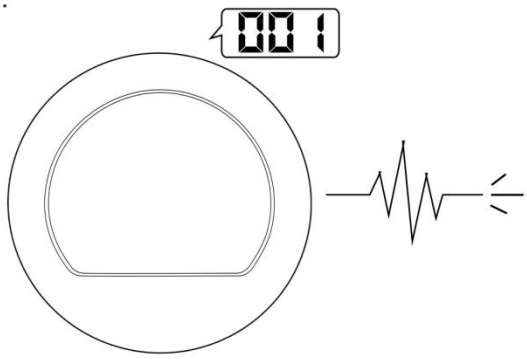

Pick up the pager and it short beeps, code matching is done.
Repeat above steps to program other pagers.

D. Calling

1.

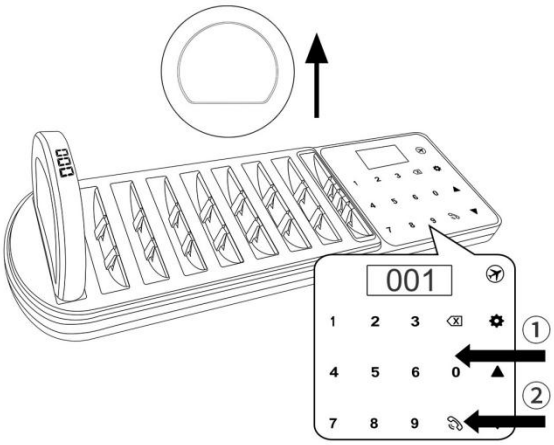

Input the number and press CALL.

2.

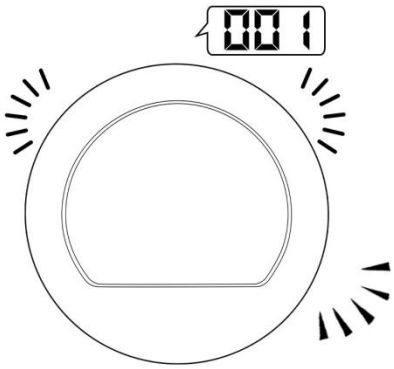

The called pager will start alarm.
Putting back to the charging base can stop alarm.

E. One-Call-Off

1.

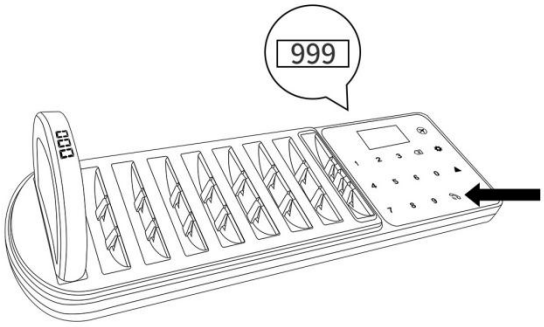

On Call status ,Call999,all charging pagers will be off.

2.

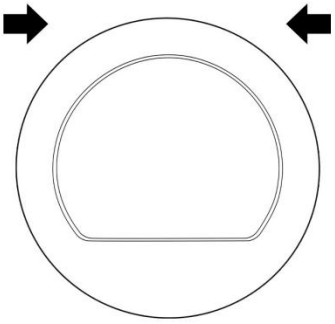

All LEDs are off if taking out the pager.
Re-charge pagers will turn on again.
This instruction is invalid to the pagers not being charged.

4. Settings

Menu	Instruction	Function	Operation
F1		Programming Mode	As shown preceding
F2	000	**Transmitter**, feedback disabled	In F2, call **000, no feedback** on keyboard when touching.
	001	**Transmitter**, beep feedback	In F2, call **001, only beep feedback** on keyboard when touching
	002	**Transmitter**, vibration feedback	In F2, call **002, only vibration feedback** on keyboard when touching
	003	**Transmitter**, beep & vibration feedback	In F2, call **003, beep & vibration both feedback** on keyboard when touching
	004	**Pager**, beep alarm mode	In F2, call **004**, pager alarms by **beep** only.
	005	**Pager**, vibration alarm mode	In F2, call **005**, pager alarms by **vibration** only.
	006	**Pager**, LED Flash alarm mode	In F2, call **006**, pager alarms by **LED Flash** only.
	007	**Pager**, beep + vibration alarm	In F2, call **007**, pager alarms by **beep** & **vibration** both.
	008	**Pager**, vibration + LED Flash alarm	In F2, call **008**, pager alarms by **vibration** & **LED Flash** both.
	009	**Pager**, beep + LED Flash alarm	In F2, call **009**, pager alarms by **beep** & **LED Flash** both.
	010	**Pager**, beep + vibration + LED Flash alarm	In F2, call **010**, pager alarms by **beep** & **vibration** & **LED Flash** all.
	011	**Pager** slow beeps	In F2, call **011**, pager **slow beeps** when alarm.
	012	**Pager** fast beeps	In F2, call **012**, pager **fast beeps** when alarm. (**Default**)
F3		Set Length of Alarm Time	In F3, **015** is displayed. Input number(1-999s) and press CALL. The alarm time can be set from **1s to 999s.**
F4		Set **Repeat** Alarm Times	In F4, **015** is displayed. Input number(1-999s) and press CALL. The pager will alarm again after the set time if the pager not being put into charging slot.
F5		Set Transmitter ID	In F5, the transmitter ID is displayed. You can change it by input a new number and press call to save.

Note:

1. ⌫ : To return the previous menu, or to cancel the input.

2. ▲ / ▼ : In call mode, they are used to check recent 10 called numbers. The showing number can be re-called by pressing CALL.
   In setting mode, they are used for page up/down.

3. In F2, the instructions only can be inputted by Page Up/Down.

4. In F4, when set to 000 will disable the function of repeated reminders.

5. It takes about 4 hours for pagers to fully charged.

FCC Warnning:

This equipment has been tested and found to comply with the limits for a Class B digital device, pursuant to part 15 of the FCC Rules. These limits are designed to provide reasonable protection againstharmful interference in a residential installation. This equipment generates, uses and can radiateradio frequency energy and, if not installed and used in accordance with the instructions, maycause harmful interference to radio communications. However, there is no guarantee thatinterference will not occur in a particular installation. If this equipment does cause harmfulinterference to radio or television reception, which can be determined by turning the equipmentoff and on, the user is encouraged to try to correct the interference by one or more of thefollowing measures:

- Reorient or relocate the receiving antenna.
- Increase the separation between the equipment and receiver.
- Connect the equipment into an outlet on a circuit different from that to which the receiver is connected.
- Consult the dealer or an experienced radio/TV technician for help.

Caution: Any changes or modifications to this device not explicitly approved by manufacturer could void your authority to operate this equipment.

This device complies with part 15 of the FCC Rules. Operation is subject to the following two conditions:

(1)This device may not cause harmful interference, and (2) this device must accept any interference received, including interference that may cause undesired operation.

This equipment complies with FCC radiation exposure limits set forth for an uncontrolled environment. This equipment should be installed and operated with minimum distance 0cm between the radiator and your body.