DAMASCO®
TECHNOLOGY

User Manual

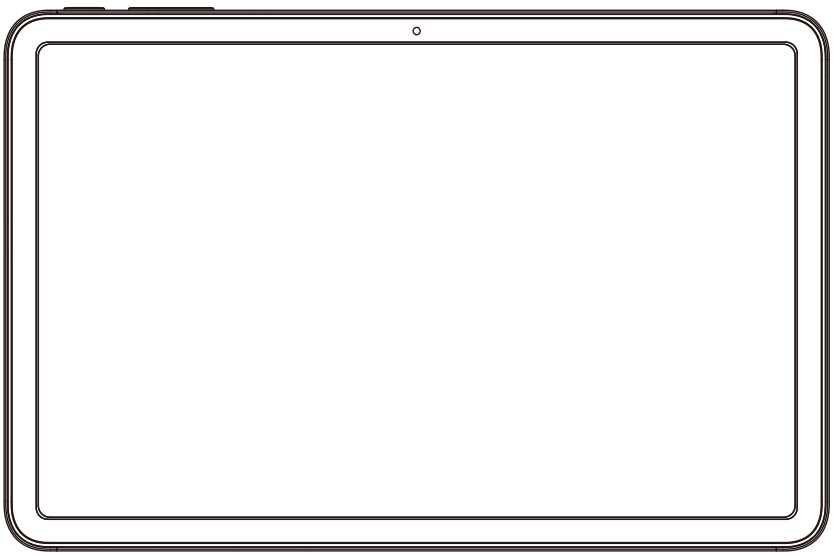

www.damascovzla.com

User Manual

Know the product

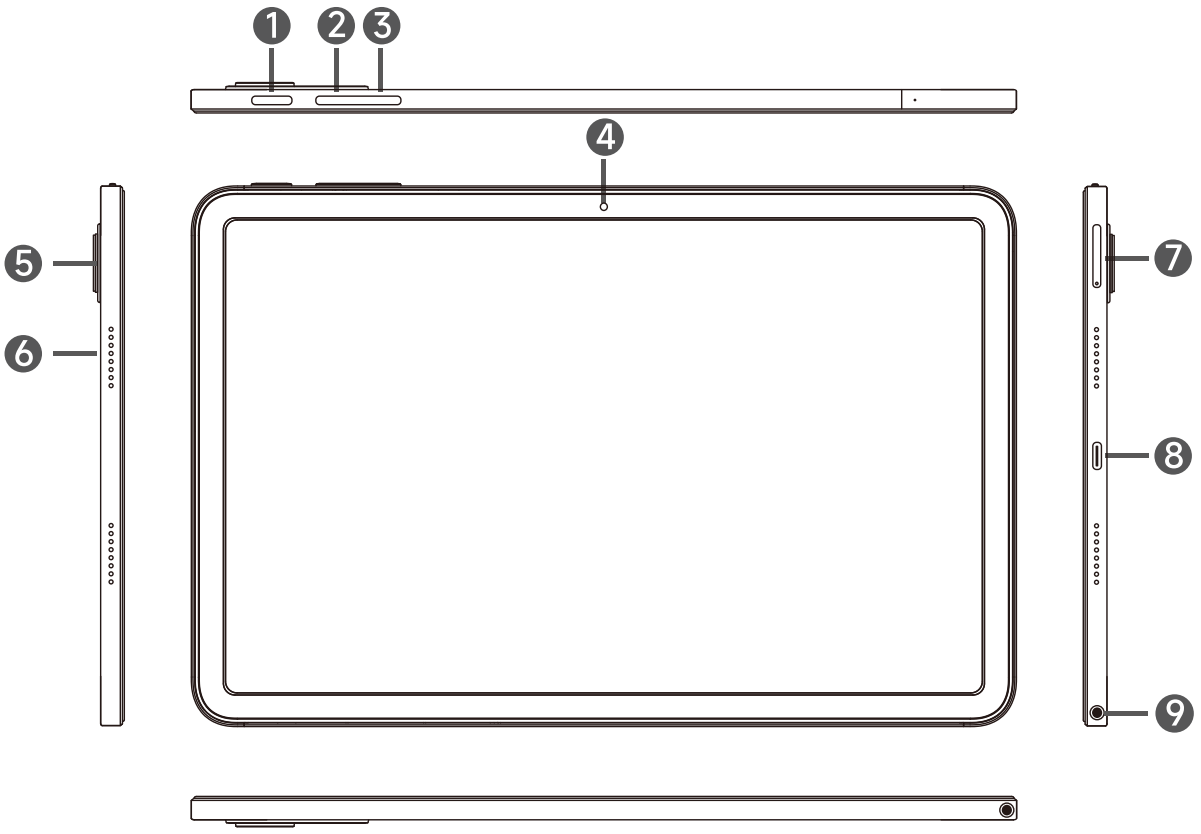

1	Power button	6	Speaker
2	Volume+	7	TF card slot
3	Volume-	8	USB-C port
4	Front camera	9	3.5mm headphone jack
5	Rear camera		

Virtual Button Bar

	Home button	Click to return to the Home screen
	Back button	Click to return to the previous screen
	Recent Tasks button	Click to view, switch, and close background applications

Pull down control center

	Users	Click to switch local user accounts
	Settings	Click to access system settings
	Shutdown	Click to power off or restart
	Internet	Click to turn Wi-Fi on/off
	Bluetooth	Click to turn Bluetooth on/off
	Flashlight	Click to turn flashlight on/off
	Do Not Disturb	Click to turn call notification reminders on/off
	Airplane mode	Click to turn airplane mode on/off
	Auto-rotate	Click to turn auto rotation on/off
	Battery saver	Click to turn power saving mode settings on/off
	Cast	Click to turn screen casting on/off
	Screen record	Click to start screen recording
	Screen Shot	Click to take a screenshot
	Location	Click to open/close position

WI-FI connection

Open "Settings" and go to "Network and Internet".

1. Turn on Wi-Fi, select a wireless network, and then enter the network password to connect.

Bluetooth connection

Open "Settings" and go to "Connected devices".

1. Click "Pair new device" and the system will automatically search for nearby Bluetooth devices;
2. Click the connectable Bluetooth device and select pairing in the pop-up menu;
3. Wait for the Bluetooth device to confirm pairing.

Battery status

Open "Settings" and go to "Battery" to view battery usage.

1. Battery Saver: Turn power saving mode on or off.
2. Battery percentage: Toggle the switch to display the battery percentage.

Sound

Open "Settings" and go to "Sound and vibration".

1. Volume: Slide the volume bar to adjust the media, notification and alarm volume.
2. Sound: Set notification, alarm, screen locking, charging and click sounds.

Display

Open "Settings" and go to "Display".

1. Brightness level: Slide the brightness bar to adjust the screen brightness.
2. Screen timeout: Set the automatic screen lock time.
3. Dark theme: Turn on or off the dark theme.
4. Display size and text: Set the system font size and display size.
5. Auto-rotate screen: Lock the current screen orientation or automatically rotate the screen according to the device orientation.

Language and Voice

Open "Settings", find "System" and enter the "Languages" setting.

1. Language: Select the system language and app language.

2. Voice: Set voice input and output.

Date and Time

Open "Settings", find "System" and go to the "Date and time" settings.

1. Set time automatically: Turn on this option to automatically sync to the local time when connected to the Internet. You can manually adjust the date and time by turning off this feature.

2. Set time zone automatically: Turn on this feature to automatically sync to the local time zone when connected to the Internet. You can manually adjust the time zone by turning off this feature.

3. 24-hour format: Choose between AM/PM and 24-hour display.

Factory reset

Open "Settings" and go to "System".

1. Go to "Reset options" and click "Erase all data".

2. Factory reset will erase all personal data, please back up your data before resetting.

Connecting to PC

The device can be connected to a PC using a USB cable to copy or delete data on the device.

1. When the device is connected to a PC, the operating system including Windows 7 and above will automatically install the MTP driver.

2. For Windows XP, Windows Media Player 11 must be installed to connect the device.

Packing list

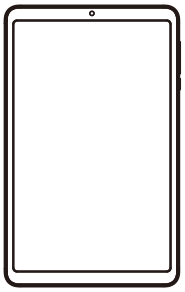

Tablet*1

User manual*1

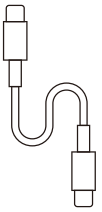

Power cord*1

Specifications

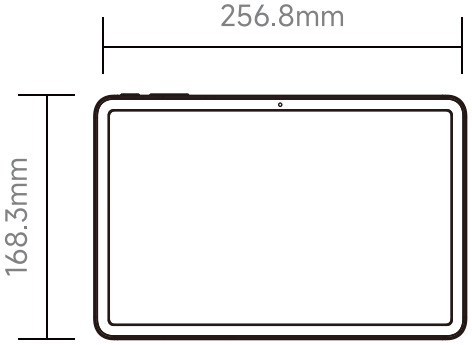

Product name: 10.95 inch Tablet
Product model: T11620-6
Screen size: 10.95 inches
Storage: 6GB RAM + 128GB ROM
Screen resolution: 1920×1200
Camera: 5MP front + 13MP rear
Speaker: 8Ω/1W*4
Microphone: MIC*1

Battery: 8000mAh
Input parameters: 9V2.22A
Rated power: 18W
Working temperature: 0°C ～ +45°C
Working humidity: 30% ～ 80%
Storage temperature: -10°C ～ +60°C
Storage humidity: 10% ～ 80%

Guarantee

Product Name		
Free Repair Warranty Period	Valid for 1 year from the date of purchase: _____ (Year) ____ (Month) ____ (Day)	
Customer	Name	
	Address	
Store	Store Name	
	Address	TEL:

To Customers:

- Please note that the contents of the warranty card you filled out may be used for repair activities and safety inspection activities during the warranty period.
- This document will not be reissued, please keep it properly to avoid loss.
- Website: www.damascovzla.com
- Support center: www.damascovzla.com

[Free Repair Policy]

1. If the product fails during the warranty period, we will repair it free of charge if it is used normally according to the instructions on the instruction manual and product label and operated according to regulations.

2. Even within the warranty period, the following cases will require repair for a fee.

(a) Failure and damage caused by improper use, improper repair or modification.

(b) Failure and damage caused by falling, moving the installation location, transportation, dropping, etc. after purchase.

(c) Failure and damage caused by fire, earthquake, storm and flood disasters, gas disasters, lightning strikes, other natural disasters, pollution, abnormal voltage and other external factors.

(d) Failure and damage caused by non-normal household use (e.g., long-term commercial use, installation on vehicles or ships).

(e) This manual is not posted.

(f) The purchase date, customer name, and retailer name are not recorded in this manual, or the relevant text is changed.

(g) The product is acquired through transfer, resale, second-hand sale, auction, etc.

FCC Statement

This equipment has been tested and found to comply with the limits for a Class B digital device, pursuant to part 15 of the FCC Rules. These limits are designed to provide reasonable protection against harmful interference in a residential installation. This equipment generates, uses and can radiate radio frequency energy and, if not installed and used in accordance with the instructions, may cause harmful interference to radio communications. However, there is no guarantee that interference will not occur in a particular installation. If this equipment does cause harm full interference to radio or television reception, which can be determined by turning the equipment off and on, the user is encouraged to try to correct the interference by one or more of the following measures:

• Reorient or relocate the receiving antenna.

• Increase the separation between the equipment and receiver.

• Connect the equipment into an outlet on a circuit different from that to which the receiver is connected.

• Consult the dealer or an experienced radio/TV technician for help.

Caution: Any changes or modifications to this device not explicitly approved by manufacturer could void your authority to operate this equipment.

This device complies with part 15 of the FCC Rules. Operation is subject to the following two conditions:

(1)This device may not cause harmful interference, and (2) this device must accept any interference received, including interference that may cause undesired operation.

Specific Absorption Rate (SAR) information:

This Device meets the government's requirements for exposure to radio waves. The guidelines are based on standards that were developed by independent scientific organizations through periodic and thorough evaluation of scientific studies. The standards include a substantial safety margin designed to assure the safety of all persons regardless of age or health. FCC RF Exposure Information and Statement the SAR limit of USA (FCC) is 1.6 W/kg averaged over one gram of tissue. The Device has also been tested against this SAR limit. This device was tested for typical body-worn operations with the back of the device kept 0mm from the body. To maintain compliance with FCC RF exposure requirements, use accessories that maintain an 0mm separation distance between the user's body and the back of the device. The use of belt clips, holsters and similar accessories should not contain metallic components in its assembly. The use of accessories that do not satisfy these requirements may not comply with FCC RF exposure requirements, and should be avoided.