Solar Charge Controller

M3333ND

User Manual

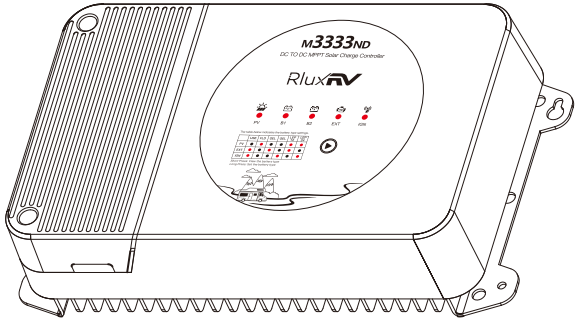

*We may modify these specifications without prior notice.

1. Warnings and Tools Icon Chart

Icons	Name	Description
	High Voltage	High voltage device. Installation should be performed by an electrician.
	High Temperature	This device will produce heat. Mount device away from other items.
	Environmental Hazard	Electronic Equipment. Do not put in landfill.
	Wire Cutter	A wire cutter is needed for cutting and stripping prior wires to connect.
	Multi-meter	A multi-meter is needed for testing equipment and verifying polarity of cables.
	Anti-static Glove	Anti-static gloves are recommended to prevent controller damage caused by static electricity.
	Electrical Tape	Electrical tape is recommended to safely insulate spliced or bare wires.
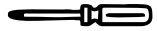	Screwdriver	A common size screwdriver is needed to attach wires to the controller.

2. Safety Tips

- **It is very important to review this manual thoroughly before attempting installation.**
- **Beware of any nearby electrical equipment that may interfere with installing this device.**

And please don't plug in any AC source to this DC-DC product, or it may cause a fire or burn to the device.

- **Solar panels may generate high voltages and currents, and please make sure your solar**

panels would be completely covered from sunlight during installation. It is recommended that the installation is performed by qualified electricians.

- Contact of wiring to this device may generate sparks, so please put on proper insulation

wear while installing this device.

- **To avoid damage to the battery or controller, use proper fuses in wiring. Please contact**

us if you need help with fuse sizing.

- **Always keep children away from this device.**

· Be certain to use the correct gauge of wire, see below for a table of recommended wire size for various current loads.

Solar Input Current	5A	10A	20A	30A
Wire Cross Section Area (mm^2)	1.5	2.5	5	8
Wire AWG	15	13	10	8

* We suggest no more than 5A's current for each square millimeter's wire core, e.g., for current of 10A, at least you should use $2mm^2$ wire.

3. Product Features

Thank you for choosing our product. This device is a DC-DC intelligent charger/controller for vehicle or similar systems with dual batteries. Applied in a dual battery system, this charger combines respective advantages of motor (ordinary/smart alternator) power generation and photovoltaic power generation.

In use of vehicles, the main/service battery is prior to being charged by the solar input as the default settings. The auxiliary/starter battery would get into charge automatically, after the starter battery was fully charged. Users can also set the charge priority between main & auxiliary batteries in the controller (through the external remote LCD screen). The auxiliary battery could enforce to charge the main battery by settings in the controller, or through the IGN alternator.

The controllers have features as follows:

These MPPT charge controllers have features as follows:

· The external input can supply power to the battery through BUCK-BOOST. The external power sources, like alternator or power supply, are able to charge both main & auxiliary batteries, through a voltage buck-boost circuit.

· Supports dual battery system charge (BAT 1/main/service battery & BAT 2/auxiliary/starter battery). If only one battery would be put in use, then please connect it in the main/service battery port as default settings.

· The charge system would identify PV or external power input as the charge sources, and distribute them to charge both main & auxiliary batteries automatically.

· Both PV and external power sources could be used for charging the dual battery system, and the user can also enforce the charge priority by setting in the remote display.

· By continuously checking solar panel power output changes, the controllers employ multiple MPPT charge algorithms in combination to boost charging efficiency in different weather and temperature conditions.

· If the remote display was connected in the controller, the user could also operate the charge system in App through mobile phones via Bluetooth.

· Charging modes available for most common deep-cycle battery types in the market, including AGM (sealed lead acid batteries/SLD), GEL, Flooded, and Lithium. Auto recognition of 12V/24V battery system voltage.

· Supports recording of system running data for up to 300 days, compatible with monitoring App through iOS and Android.

· Industrial grade design with full ranges of electronic protections on PV and battery in the controller. (optional accessory, not in the standard package list).

4. Device Diagram

M3333ND

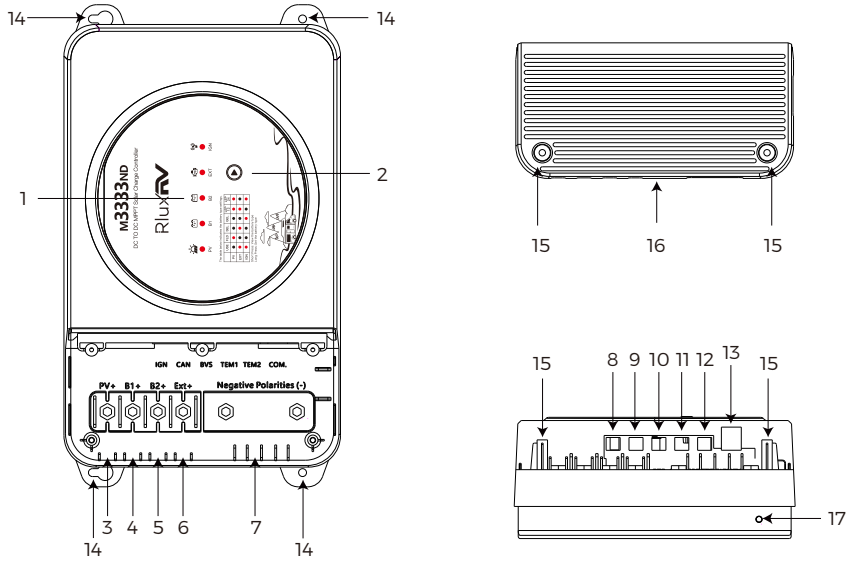

#	Description	#	Description
1	LED Indicator (PV,BAT 1,BAT 2,EXT,IGN)	10	BVS Input Voltage
2	Function Key	11	External BAT1 Temperature Sensor
3	PV Positive Terminal	12	External BAT2 Temperature Sensor
4	Battery 1 Positive Terminal	13	RS485 Communication Port
5	Battery 2 Positive Terminal	14	Mouting Holes
6	EXT Input Positive Terminal	15	Junction Box Cover Mounting Screw Hole
7	Public Negative Port	16	Junction Box Cover
8	IGN Single Input	17	Shell Ground Connection Point
9	CAN Communication Port		

5. Mounting Instruction

5.1 Wire preparation.

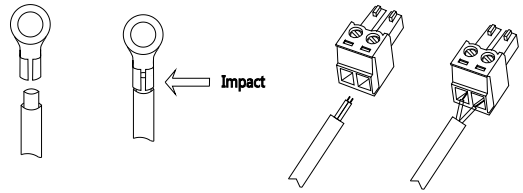

5.2 Remove the mounting cover plate.

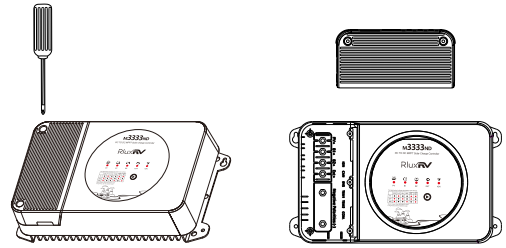

5.3 Connect the main wire.

The negative pole of the main wire is the common negative pole, so it can be installed in a random order.

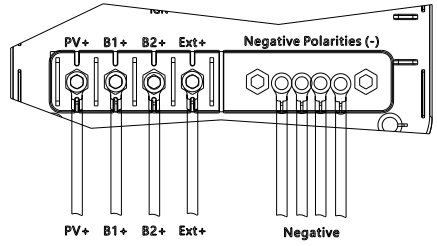

5.4 Connect the communication or the secondary line.

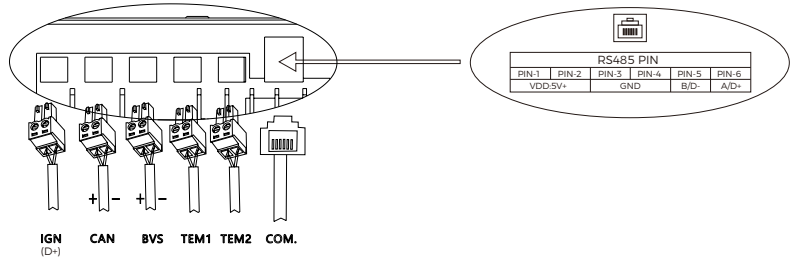

5.5 After connecting the wires, cover the mounting cover plate and tighten the screws.

5.6 Fixed.

5.6.1 Placement.

This device adopts vertical heat dissipation, so it needs to be placed horizontally when it is fixed, so that the hot air can desperse smoothly.

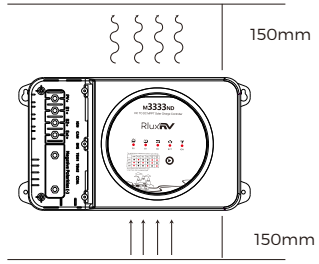

5.6.2 Fixed with self-tapping screws or auxiliary fixing devices.

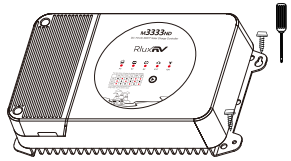

6. Wire Connection Sequences

* The MPPT charging at PV terminal is buck charging, so the voltage at PV terminal must be greater than the voltage at battery terminal.
* The EXT terminal is Buck-Boost charging, so the input voltage only needs to be within the maximum voltage range 35V.

6.1 Single-battery PV charging system.

The single-battery system supports any connection of the main battery or the secondary battery. The example in the figure below only shows the connection of the battery terminal. Please refer to the following scenarios for the battery connection.

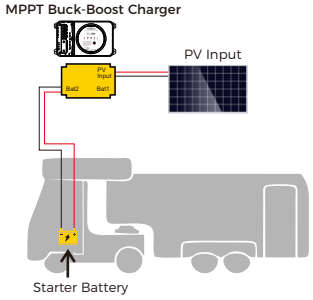

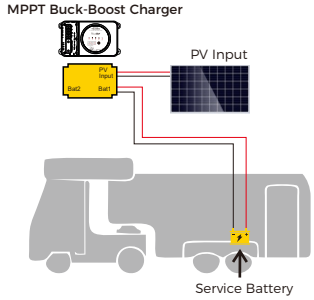

6.2 The Alternator directly connected to the starter battery.

6.2.1 Smart Alternator.

The alternator will lead out the IGN signal line after starting.
When the signal line is detected, the machine will detect the voltage of the starter battery. If the voltage is greater than the set voltage, the starter battery will start to charge the living battery.

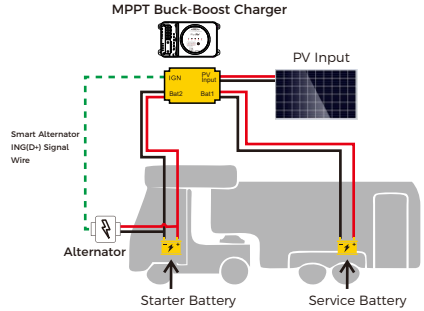

6.2.2 Regular Alternator.

The alternator will directly charge the starter battery after it is started. When the machine detects the voltage of the starter battery, if it is greater than the set voltage, the starter battery will start to charge the living battery.

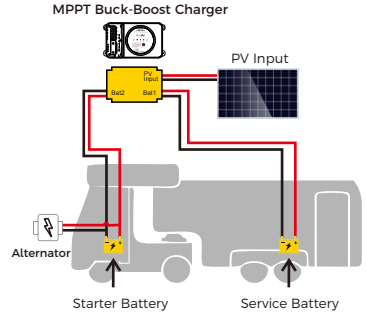

6.3 The alternator is connected to the external input port of the controller. (this application is similar to the adapter or power supply directly connected to the external input port)(DC input only)

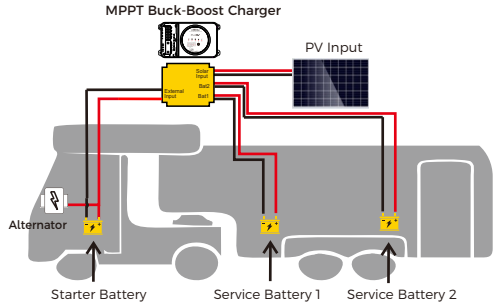

7.Working Process Introduction

7.1 System operating battery identification.

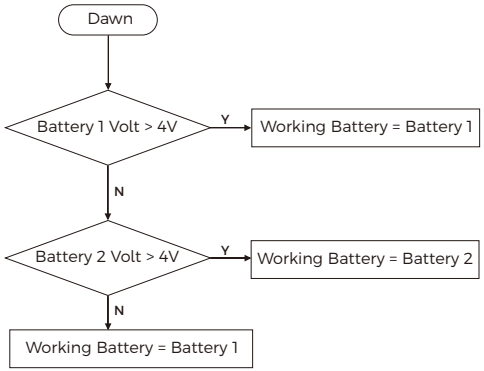

7.2 The system determines whether the activation is required.

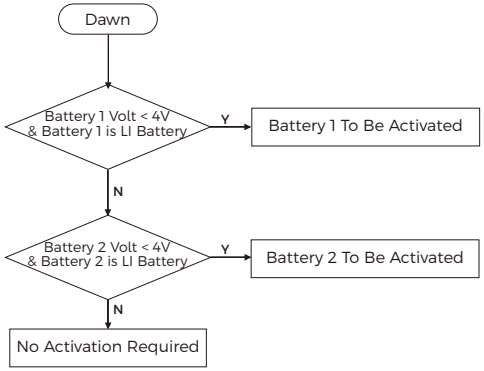

7.3 Switching logic between battery 1 and battery 2 during abnormal operation. (battery with load during operation) (take 12V system as an example)

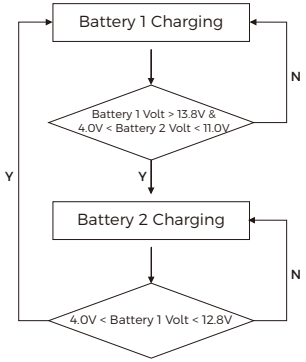

7.4 Switching logic between battery 1 and battery 2 during normal operation. (battery without load) (take 12V system as an example)

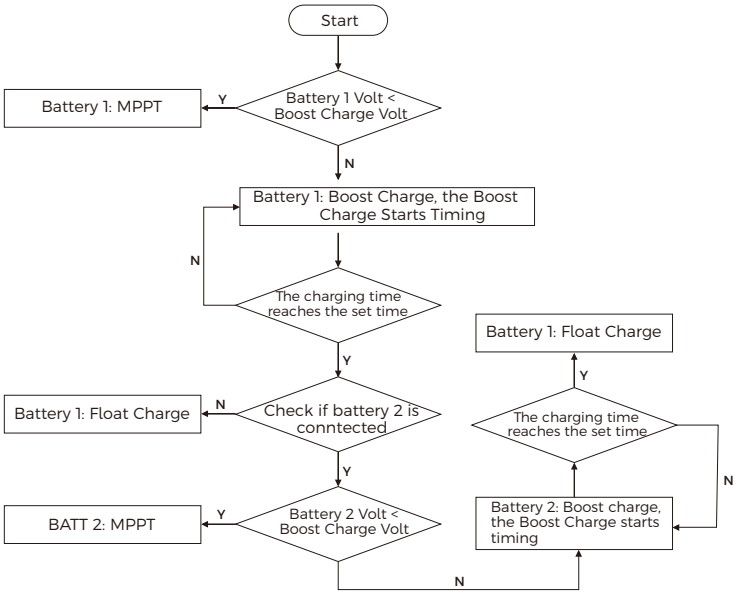

7.5 Buck-Boost charging. (take 12V system as an example)

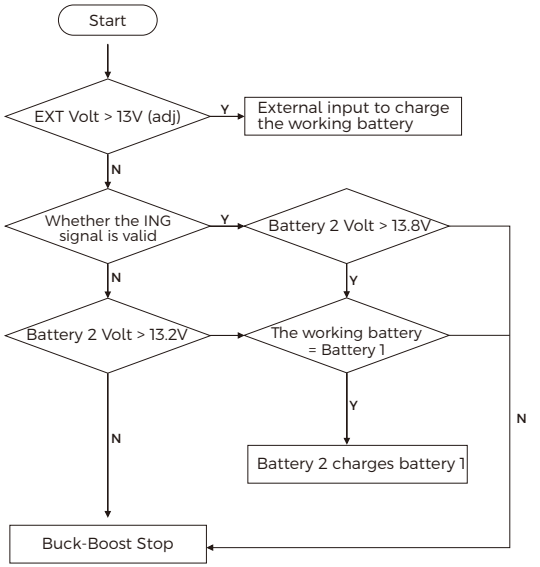

7.6 MPPT Charging.

MPPT is the abbreviation of Maximum Power Point tracking. Since the photovoltaic curve has the following characteristics, it is hoped that the following Work Point can be tracked when the photovoltaic energy is used for charging.

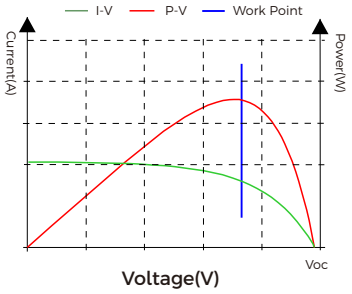

7.6.1 Lead-acid 3-phases charging.

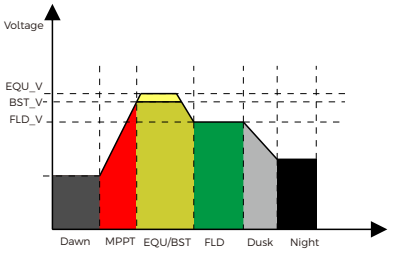

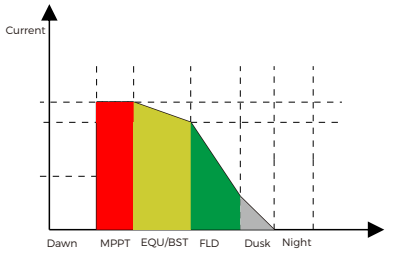

7.6.2 LI Battery Charging.

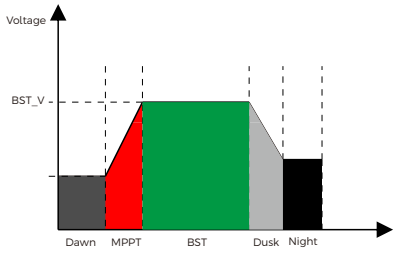

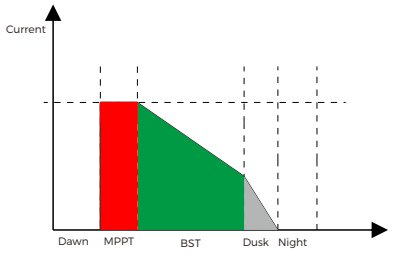

7.7 Photovoltaic Characteristics.

7.7.1 PV from dark to normal light. (low light on the left, light enhancement on the right)

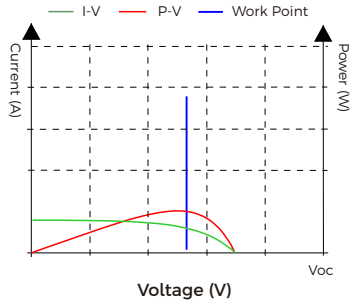

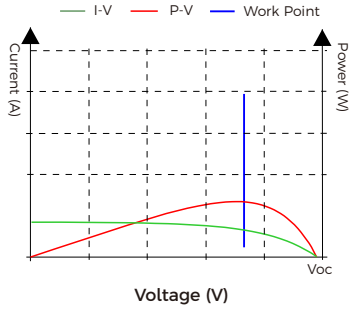

7.7.2 The change of light intensity to photovoltaic curve. (weak light on the left and strong light on the right)

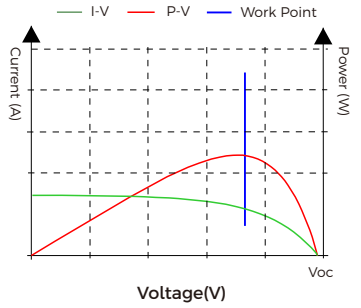

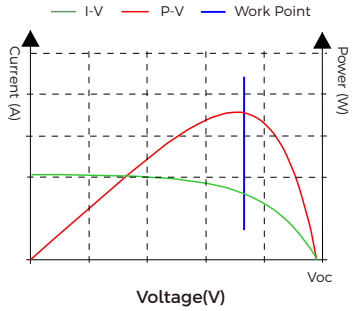

7.7.3 The efect of temperature on light. (the higher the temperature, the lower the open circuit voltage, but the overall power is almost the same)

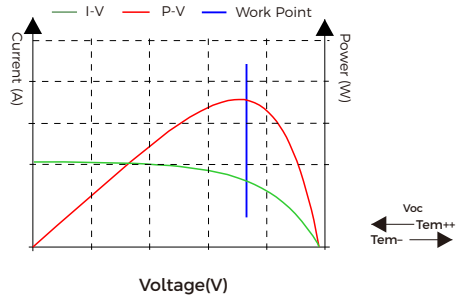

8. LED Flash Rhythm Chart

LED Name	LED Display	Signal Indication
PV	Off	Solar Input Not Charging * PV LED is generally off during nighttime
	Steady On	Charging Mode
	Slow Flash	Error
B1	Single Flash	Charging
	Slow Fast	Error
	Steady On	Connect Normal
B2	Single Flash	Charging
	Slow Fast	Error
	Steady On	Connect Normal
EXT	Off	External Input Not Charging
	Steady On	External Input Detected & DC-DC Charging
IGN	Off	Regular Alternator Not Connected
	Steady On	Regular Alternator Charging

❶ Check the Fault light for possible system errors.

9. Key + LED Battery type operation Chart

Status Mode:

See Chart 8

View Mode:

B1/B2 - View the current battery type of B1/B2, and the rest 3 LED lights indicate the specific battery types [Attached Table 2].

Setting Mode:

B1/B2- The current setting for B1/B2, and the rest 3 LED lights indicates battery types for settings [Attached Table 2].

Attached Table 1

Operation Key	Modes	B1/B2	PV/EXT/IGN	Description
Short Press ▶	Status Mode	Check the manual for details of each indicator's status (enter view mode)		
	View Mode	Flash	Always on	Short press B1/B2 to shift and check the attached table 2 for the rest
	Setting Mode	Always on	Flash	Short press to set the B1/B2 battery type, and check the attached table 2 for the rest
Long Press ▶	Status Mode	Enter the setting mode		
	View Mode			
	Setting Mode	Always on	Flash	Save & exit settings and enter status mode

Note: In the viewing or setting mode, if there is no key operation for 30 seconds, it will automatically save and exit to enter the status mode.

Attached Table 2

	USE	FLD	SEL/AGM	GEL	LFP12	LFP24
PV	○	●	○	○	●	●
EXT	●	○	●	○	●	○
IGN	●	○	○	●	○	●

● Flash or Always on ○ Off

10. LCD Display Interface Overview

Please check the LCD manual for more details.

11. Product Dimension

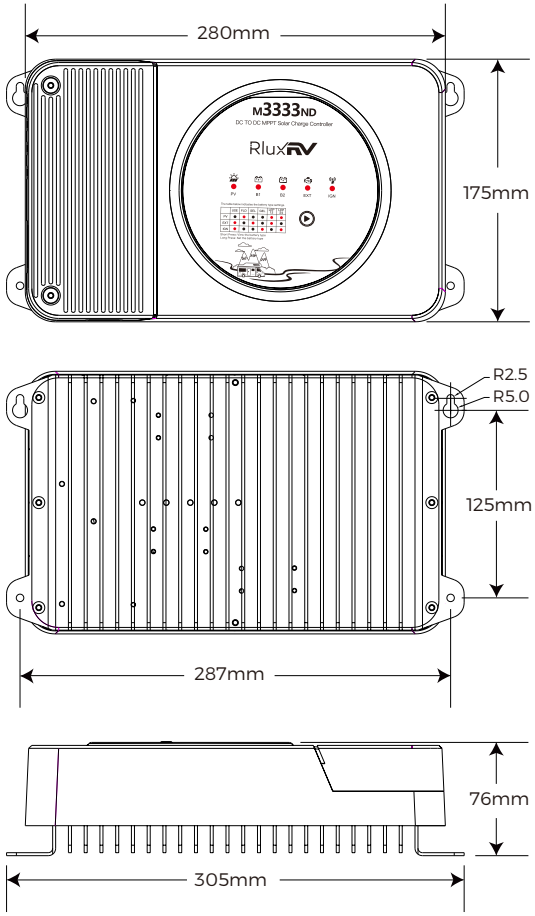

12. Controller Specification

The variable “n” is adopted as a multiplying factor when calculating parameter voltages, the rule for “n” is listed as: if battery system voltage is 12V, n=1; 24V, n=2.
For example, the equalize charge voltage for a 12V FLD (Flooded) battery bank is 14.8V*1=14.8V. The equalizing charge voltage for a 24V FLD (Flooded) battery bank is 14.8V*2=29.6V.

Parameter	Value
Charging Mode	MPPT
No-load Loss	25mA
System Wiring Grounded	Negative Grounded
Operating Temperature	-25℃ ~ 45℃
Storage Temperature	-35℃ ~ 65℃
Operating Altitude	<3000m
IP Protection	IP45
Charging Efficiency	>98%
Communication Port	RS485/CAN(Optional)
Charging Derating	Step derating and recovery at 70℃
Connectors	Bare wire terminals (V6)
LED Instructions	PV,BAT1,BAT2,EXT,IGN
Operating Mode	External Display
Bluetooth	The built-in Bluetooth module of the display screen operated by APP
Protection	PV Over-Voltage, PV Reverse Protection, Battery Over Voltage, Battery Over-Charge, Battery Reverse Protection, External input Over-Voltage, EXT Reverse Protection, Controller Over-Heating, High Ambient Temperature.

	Battery 1
Battery	Service Battery
Battery System Voltage	12/24V AUTO
Battery Voltage Range	8V-32V
Battery Type	GEL/SEL/FLD/USE/LI
Max Current	30A
BVS	Yes
	Battery 2
Battery	Starter Battery
Battery System Voltage	12/24V AUTO
Battery Voltage Range	8V-32V
Battery Type	GEL/SEL/FLD/USE/LI
Max Current	30A
BVS	No
PV	
Charging Mode	Buck MPPT+CC+CV
Max Solar Input Power	450W / 900W
Max Solar Input Voltage	60Voc
PV Tracking Efficiency	>99%
EXT (External charging equipment)	
Charging Mode	DC-DC Buck-Boost Charging
Equipment Type	DC Alternator, Adapter, Charger, Power Supply, Battery
Max Charging Current	30A
EXT Input Voltage Range	8V-35V
Max EXT Input Power	450W / 900W

This device complies with Part 15 of the FCC Rules. Operation is subject to the following two conditions: (1) this device may not cause harmful interference, and (2) this device must accept any interference received, including interference that may cause undesired operation.

Changes or modifications to this unit not expressly approved by the party responsible for compliance could void the user's authority to operate the equipment.

NOTE: This equipment has been tested and found to comply with the limits for a Class B digital device, pursuant to Part 15 of the FCC Rules. These limits are designed to provide reasonable protection against harmful interference in a residential installation. This equipment generates, uses and can radiate radio frequency energy and, if not installed and used in accordance with the instructions, may cause harmful interference to radio communications. However, there is no guarantee that interference will not occur in a particular installation. If this equipment does cause harmful interference to radio or television reception, which can be determined by turning the equipment off and on, the user is encouraged to try to correct the interference by one or more of the following measures:

-- Reorient or relocate the receiving antenna.
-- Increase the separation between the equipment and receiver.
-- Connect the equipment into an outlet on a circuit different from that to which the receiver is connected.
-- Consult the dealer or an experienced radio/TV technician for help.

This device and its antenna(s) must not be co-located or operation in conjunction with any other antenna or transmitter.

Radiation Exposure Statement

To maintain compliance with FCC's RF Exposure guidelines, This equipment should be installed and operated with minimum distance of 20cm from your body.