Solar Charge Controller

Negative Grounded - APP Operation

M9999T

User Manual

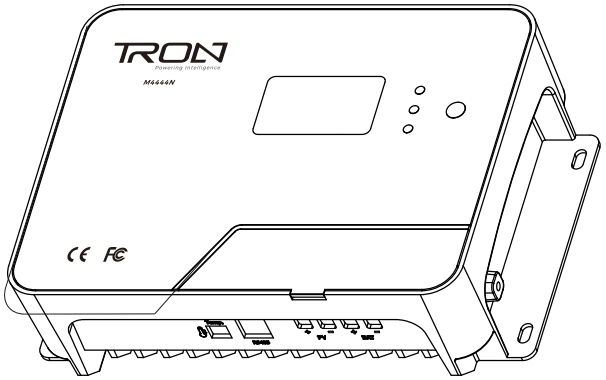

Download APP on Apple Store / Google Play Store

*We may modify these specifications without prior notice.

1. Warnings and Tools Icon Chart

Icons	Name	Description
	High Voltage	High voltage device. Installation should be performed by an electrician.
	High Temperature	This device will produce heat. Mount device away from other items.
	Environmental Hazard	Electronic Equipment. Do not put in landfill.
	Wire Cutter	A wire cutter is needed for cutting and stripping prior wires to connect.
	Multi-meter	A multi-meter is needed for testing equipment and verifying polarity of cables.
	Anti-static Glove	Anti-static gloves are recommended to prevent controller damage caused by static electricity.
	Electrical Tape	Electrical tape is recommended to safely insulate spliced or bare wires.
	Screwdriver	A common size screwdriver is needed to attach wires to the controller.

2. Safety Tips

- It is very important to review this manual thoroughly before attempting installation.
- Beware of any nearby electrical equipment that may interfere with installing this device. And please don't plug in any AC source to this DC-DC product, or it may cause a fire or burn to the device.
- Lithium batteries are not allowed to be reverse connected, for risks might happen in battery activation if the wiring connection reversed.
- Always keep children away from this device.
- Please don't keep the battery side open for long time, while the PV input keeps plugging in, or it may cause a screen failure in this device.
- Solar panels can generate high voltages and currents, make sure your solar panels are completely covered from sunlight during installation. It is recommended that installation be performed by a qualified electrician.
- To avoid damage to the battery or controller, use proper fuses or DC breakers in wiring. Please do not hesitate to contact the professions if you need help with fuse and DC breaker sizing.
- Connecting wires to this device can generate sparks, please wear proper insulation gear while installing this device.
- This device is common negative designed, please wiring negative grounded if grounding job is required.
- Be certain to use the correct gauge of wire, see below for a table of recommended wire size for various current loads.

Solar Input Current	5A	10A	20A	30A	40A
Wire Cross Section Area (mm^2)	1.5	2.5	5	8	10
Wire AWG	15	13	10	8	7

* We suggest no more than 5A's current for each square millimeter's wire core, e.g., for current of 10A, at least you should use 2mm2's wire.

3. Product Features

Thank you for choosing our products. This solar charge controller is a device for solar charge regulation with the latest MPPT algorithm technology. This device is mainly used in small and medium sized off-grid solar power systems.

These MPPT charge controllers have features as follows:

1. Aluminum casing + tempered glass cover + screen touch operation
2. Great charge performance in high temperature environment
3. Built-in BT communication module for mobile phone APP operation
4. Inside filled in with silicon/polyurethane for better cooling and waterproof

- By continuously checking solar panel power output changes, the controllers employ multiple MPPT charge algorithms in combination to boost charging efficiency in different weather and temperature conditions.
- Aluminum casing plus inside filled in complex silicon & polyurethane for a great cooling and waterproof system, ensures better charge performance in environment of high temperature and high humidity.
- Tempered glass cover with back-lighted LCD display, touch screen operation for better user experience. More advanced operations are available in mobile phone APP, or in the external remote LCD display device (DS, optional accessory, not in the standard package list)
- Built-in buffer, allows max 25% exceeding rated power input.
- With built-in BT communication module in this controller, we provide APP ChargePro for mobile phone monitoring and operation. You can search "ChargePro" and download the APP at IOS APP Store and Google Play Store.
- Charging modes available for most common deep-cycle battery types in the market, including AGM (sealed lead acid batteries/SLD), GEL, Flooded, and Lithium. For more advanced settings, please operate in the mobile phone APP.
- Auto recognition of 12V/24V battery system voltage by MS2420N / MS2430N / MS2440N model; auto recognition of 12V/24V/36V/48V battery system voltage by MS4820N / MS4830N / MS4840N model. Lithium battery excluded from this feature.
- Supports recording of system running data including power generated and power utilized for up to 300 days, compatible with monitoring App through IOS and Android.
- Industrial grade design with full range of electronic protections, such as battery over-charge, battery over-discharge, PV over-voltage, controller over-heating, as well as reverse polarity protection for PV and battery sides, and etc.
- Supports RS485 communication with Modbus protocol (RJ12).
- Supports parallel charge function of dual units by linking each other with the parallel charge cable (optional accessory, not in the standard package list).
- Supports remote display screen for monitoring and operation, linking through RJ12 port in the controller. (optional accessory, not in the standard package list).

4. Device Diagram

M9999N

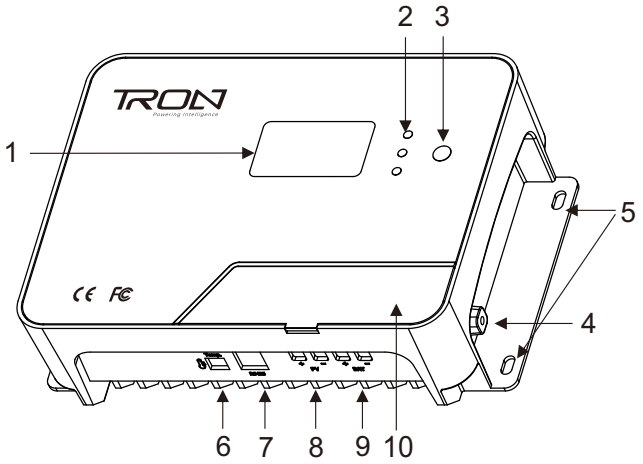

#	Description	#	Description
1	LCD Display Screen	6	External Temperature Sensor Port
2	LED Indicator (PV, BAT, FAULT)	7	RS485 Communication Port
3	Touch Screen Button	8	Solar Input Terminals
4	Grounded Terminal	9	Battery Terminals
5	Installation Mounting Holes	10	Magnetic Cover

5. Wiring Instructions

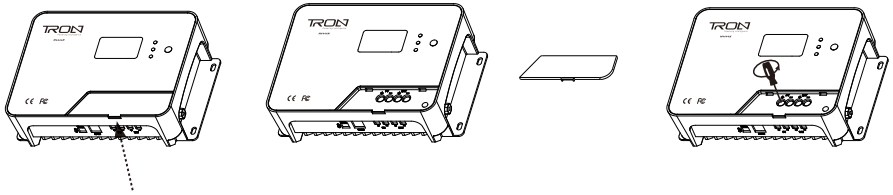

1 & 2: Remove the magnetic cover, and put it aside.

3. Unscrew the terminals completely, before inserting any wiring leads.

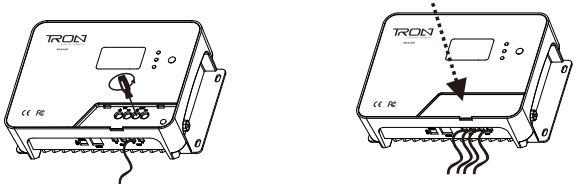

4. Insert the bare wire side of the cable to the terminal, and tighten the screws.

5. Check the wiring condition and put the magnetic cover back.

6. Wiring sequence

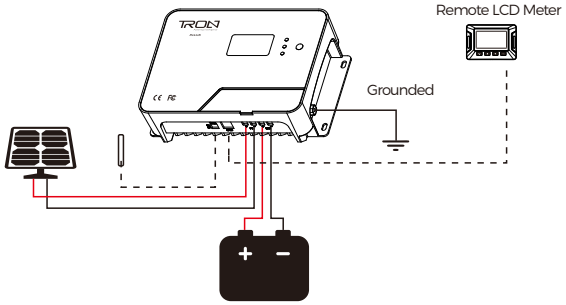

1.Connect the positive battery wire followed by the negative battery wire.

2.Connect the positive solar array output wire followed by the negative solar array output wire (make sure your solar panels are fully covered to prevent electrical shock)

3.Connect the external temperature sensor to its terminal shown above, and attach or stick the temperature sensor to the battery side.

4.Download APP ChargePro and turn on the BT function in the mobile phone. Testing the APP function with the controller.

5.Connect the external device through RS485 communication port, like remote LCD display, external BT communication module, parallel charge cable, and etc. (if applicable)

* Please don't keep the battery terminal open for long, while PV input keeps on.

7. RS485 Connection Diagram (RJ12)

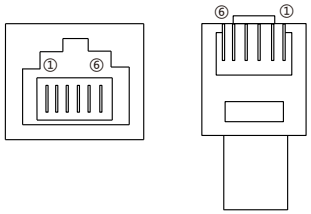

RS485 PIN					
PIN-1	PIN-2	PIN-3	PIN-4	PIN-5	PIN-6
VDD	VDD	GND	GND	D-	D+

*Support 3.3V, 20mA

8. LED Light Signal Interpretation Chart

LED Name	LED Display	Signal Indication
PV	Off	Not In Charge
	Steady On	In Charge
BAT	Fast Flash	Battery Over Voltage
	Steady On	Battery On & Normal
FAULT	Off	No Error or Alarm
	Steady On	System with Error or Alarm

9. LCD Display Interface

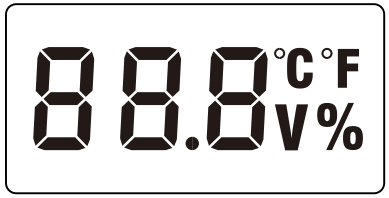

9.1 Start the system & recognizes the voltage

System start up: auto recognize the battery voltage 12/24/36/48V

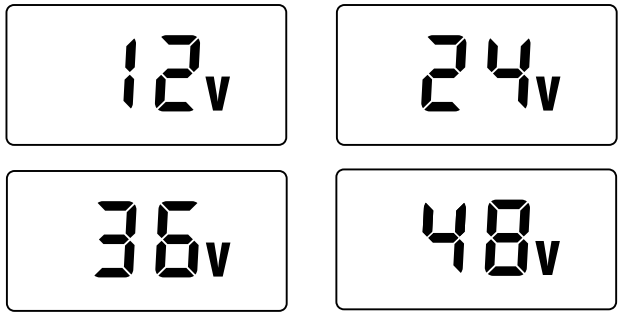

9.2 LCD Display Cycle

The battery voltage view will be displayed by default when the system is started. Use the function key to cycle through different views.

LCD screen display cycle: battery voltage, battery SOC, temperature (both Fahrenheit and Celsius temperature views are supportable, can be shifted each other in the set mode) , the error code.

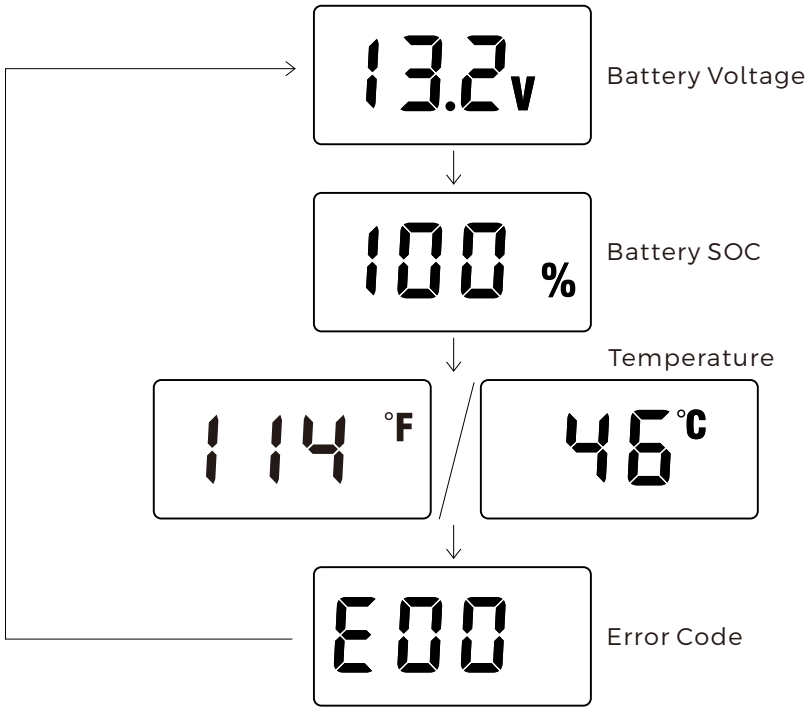

10. Key Fuctionality Chart

Function Key	System Mode	Operation	Operation Description
	View Mode	Short Press	View Next Page (according to the LCD screen display cycle)
		Long Press	Enter SET mode
	Set Mode	Short Press	Increase Parameter Value (Return to the minimum value after reaching the maximum value) or temperature unit. Select battery mode.
		Long Press	Exit SET Mode & Saving Date

11. Parameters Setting

1.Setting Battery Mode

In [Battery Voltage], [Battery SOC], or [Error] page, long press the touch key to enter the battery type setting.

* Note: If users need to choose USE or LI battery mode, they can only operate through APP.

1.1. Battery Types (FLD/SEL/GEL)Setting:

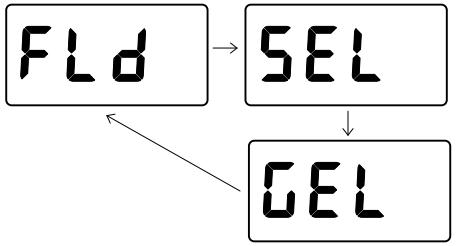

1.2. Battery Type Setting (USE)

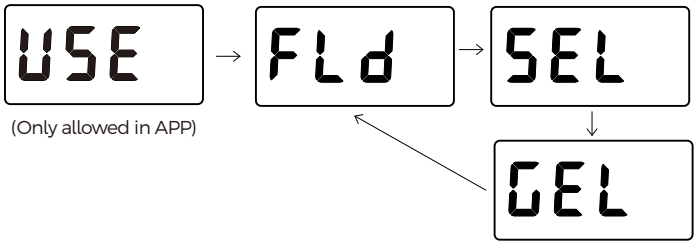

(Only allowed in APP)

1.3. Battery Type Setting (LI)

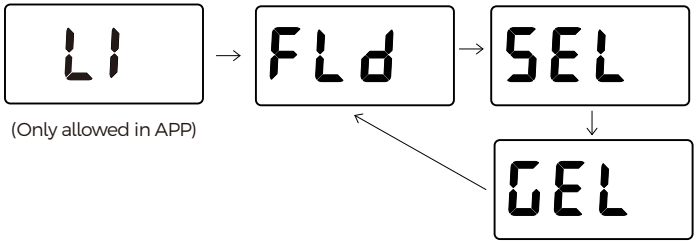

(Only allowed in APP)

Abbreviations	Battery Types	Description
FLD	Flooded Lead-acid battery	Parameters set on default, not adjustable. Battery system voltage automatically recognized.
SEL	Sealed Lead-acid battery - SLD /AGM	
GEL	Gel Battery	
LI	Lithium Battery	Battery system voltage and parameter settings are only allowed to set by APP operation or in the remote display.
USE	Advanced User Mode. For Professions Only.	Battery system voltage and advanced parameter settings are only allowed to set by APP operation. Part of the parameters could be set in the remote display.

2.Temperature Unit Setting:

In the 【Temperature】page, long press the key to enter and set the temperature unit.

℉ = ℃*1.8 + 32。

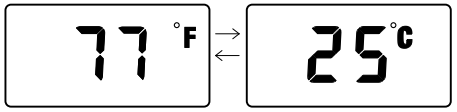

12. Error Code Chart

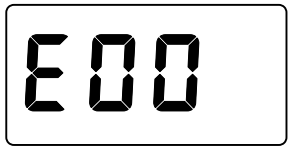

Code	Error	Description	Quick Troubleshoot
E00	No Error	-	-
E02	Battery Over-voltage	Battery voltage has exceeded controller limit.	Check battery bank voltage for compatibility with controller.
E06	Equipment Overheating	Controller exceeds ambient temperature limit.	Ensure the controller is placed in a well-ventilated cool, dry place.
E07	Environment Over-temperature	The device working surrounding temperature is too high, and the controller would stop charging anytime.	Try to lower the working surrounding temperature.
E10	Solar Over-voltage	Solar array voltage exceeds controller rated input voltage.	Decrease the voltage of solar panels connected to the controller.
E13	Solar Reverse Polarity	Solar array input wires connected with reverse polarity.	Disconnect and re-connect with correct wire polarity.
E14	Battery Reverse Polarity	Battery connection wires connected with reverse polarity.	Disconnect and re-connect with correct wire polarity

* Note: the missing error codes in the above chart indicates that this controller has no such error or alarm condition.

13. Controller Specification

The variable "n" is adopted as a multiplying factor when calculating parameter voltages, the rule for "n" is listed as: if battery system voltage is 12V, n=1; 24V, n=2; 36V, n=3; 48V, n=4.
For example, the equalize charge voltage for a 12V FLD (Flooded) battery bank is 14.8V*1=14.8V.
The equalizing charge voltage for a 24V FLD (Flooded) battery bank is 14.8V*2=29.6V.

Controller Parameter	Value
Model No.	M9999N
System Wiring Grounded	Negative Grounded
Battery System Voltage	12V/24V/36V/48V Auto (FLD/GEL/SEL/USE) Manual(Li/Use)
No-load Loss	12mA/12V ; 10mA/24V; 6mA/36V; 4mA/48V
Max Solar Input Voltage	<100Voc
Rated Solar Charge Current	40A
Max Solar Input Power	
Operating Temperature	-35°C ~ +45°C/-95°F ~ +113°F
IP Protection	IP43
Net Weight	1.886 kg
Communication Port	RS485+Bluetooth(APP)
Operating Altitude	≤3000 meters
Controller Dimension	218*150*65mm

Battery Voltages	Battery Parameters				
Battery Types	FLD	SEL	GEL (default)	USE (adjustable)	LI (adjustable)
Equalize Charge Voltage	14.8V*n	14.6V*n	–	Default	–
Boost Charge Voltage	14.6V*n	14.4V*n	14.2V*n	Default: GEL	Default: 14.2V*n
Float Charge Voltage	13.8V*n			Default: GEL	–
Boost Charge Recovery Voltage	13.2V*n			Default: GEL	–
Over-discharge Recovery Voltage	–			–	–
Over-discharge Voltage	–			–	–
Auto Temperature Compensation	-3mV/2V/°C			Default: GEL	–

Accessory List	Package Status
External Temperature Sensor	Yes
Remote LCD Meter	Optional
Bluetooth Module	Yes/Inbuit
Parallel Charge Use Cable	Optional
User Manual	Yes

14. Controller Dimension

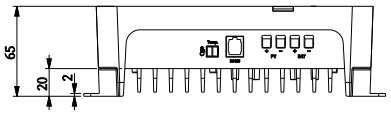

M9999N
Product Dimension: 218*150*65mm
Installation Area Dimension: 205*60mm
Installation Hole Size: 5*5mm
Connection Socket Size: 7.5*7.5mm

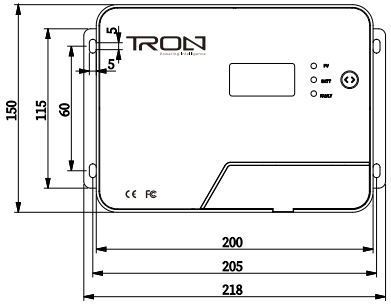

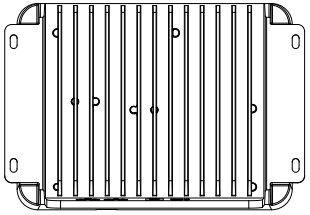

This device complies with Part 15 of the FCC Rules. Operation is subject to the following two conditions: (1) this device may not cause harmful interference, and (2) this device must accept any interference received, including interference that may cause undesired operation.

Changes or modifications to this unit not expressly approved by the party responsible for compliance could void the user's authority to operate the equipment.

NOTE: This equipment has been tested and found to comply with the limits for a Class B digital device, pursuant to Part 15 of the FCC Rules. These limits are designed to provide reasonable protection against harmful interference in a residential installation. This equipment generates, uses and can radiate radio frequency energy and, if not installed and used in accordance with the instructions, may cause harmful interference to radio communications. However, there is no guarantee that interference will not occur in a particular installation. If this equipment does cause harmful interference to radio or television reception, which can be determined by turning the equipment off and on, the user is encouraged to try to correct the interference by one or more of the following measures:

-- Reorient or relocate the receiving antenna.
-- Increase the separation between the equipment and receiver.
-- Connect the equipment into an outlet on a circuit different from that to which the receiver is connected.
-- Consult the dealer or an experienced radio/TV technician for help.

This device and its antenna(s) must not be co-located or operation in conjunction with any other antenna or transmitter.

Radiation Exposure Statement

To maintain compliance with FCC's RF Exposure guidelines, This equipment should be installed and operated with minimum distance of 20cm from your body.