BLE MODULE DATASHEET - CHF8ML
CHF8ML Bluetooth Module Information

File version: V1.0
Production date: 2022-03-07

version	REVISION	writer	to examine	date	department
V1.0	Initial version	WangauanXiong	Jeff	2022/03/07	production department

1 Product Introduction

1.1 product overview

The CHF8ML BLE Module is based on Bluetooth Low Energy technology for the Internet of Things (IoT)

The Bluetooth BLE control module developed and designed adopts the module designed by FR801x Bluetooth BLE IC. Featuring high cost-effectiveness and reliability, we provide the best solutions and services for the Internet of Things era.

For IoT applications that connect everything, the CHF8ML BLE Module module, together with a series of hardware design reference materials, apps, and firmware, can quickly help developers and manufacturers achieve the development and rapid mass production of Bluetooth smart products.

If there is a need for customization and deep design, we will also provide API interfaces, development tool SDKs, and more

1.2 Product images

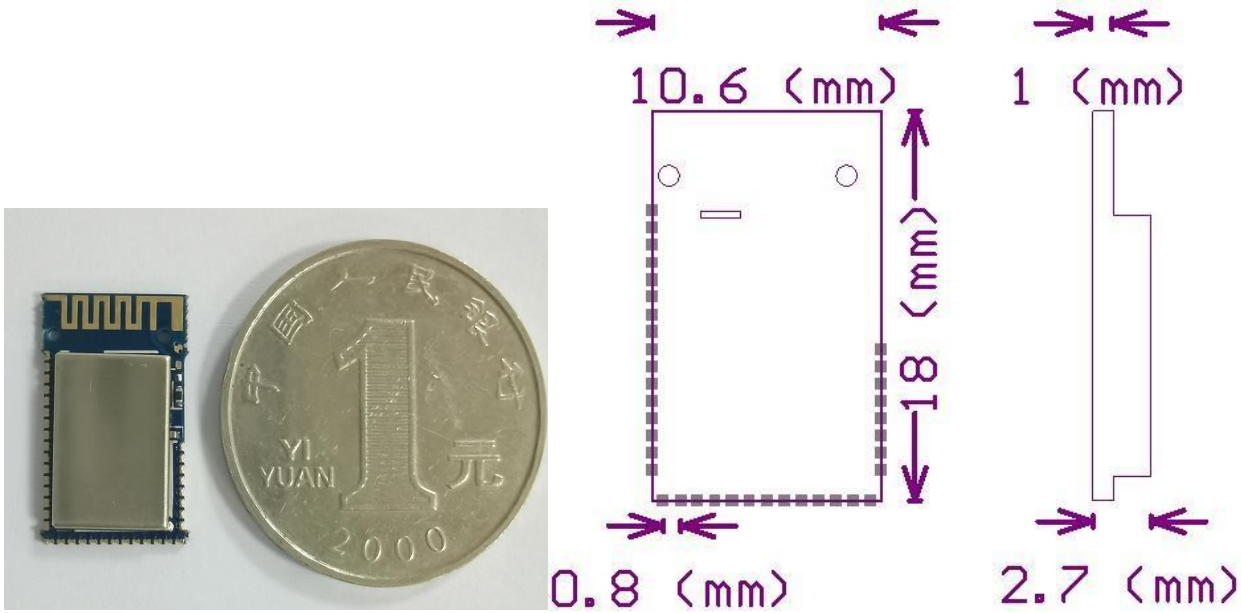

Figure 0.1 CHF8ML BLE Module module (without IPEX mount)

1. 3 Application diagram

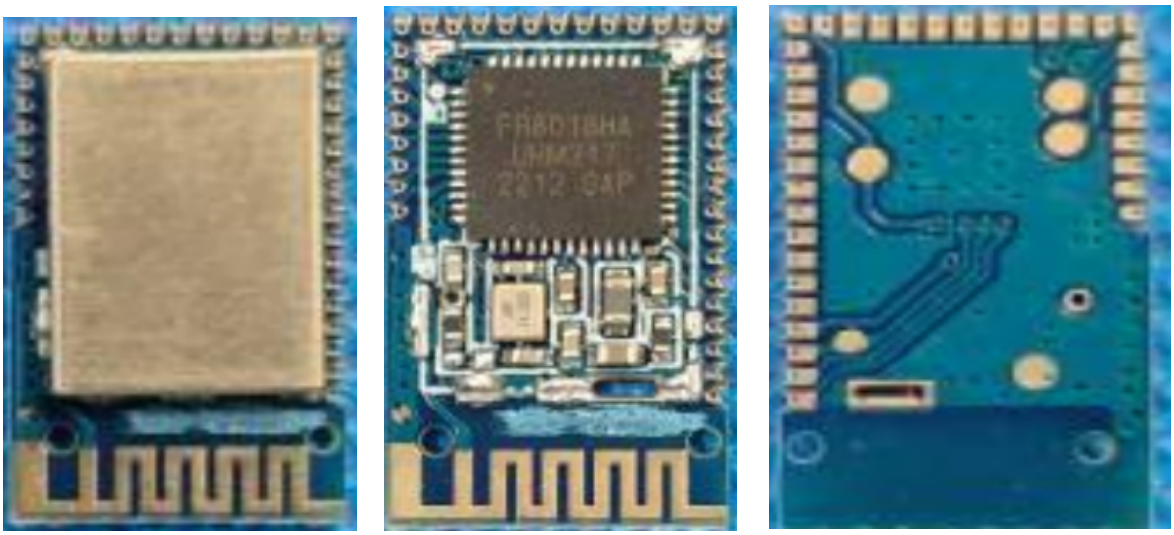

Attention: In order to ensure good BLE connection performance, there should be no metallic substances around the module antenna.

1. 4 Introduction to Intelligent Control System

By integrating the CHF8ML BLE Module module, developers can achieve the Bluetooth control function shown in the figure below. Through the Bluetooth or cloud system of the mobile phone and related installed APP software, smart devices can be controlled by mobile apps/ordinary switches/voice, etc. We will create a perfect human-machine interaction mechanism and device to device interconnection, bringing users the best user experience.
Before Bluetooth pairing, it is necessary to install an APP to achieve wireless connection between smart devices and mobile phones via Bluetooth or Bluetooth routers.

1.5 Modules&Application Fields

Module characteristics

- Supports 2.4GHz Bluetooth Low Energy 5.0
- Compliant with Bluetooth specification V5.0 LE, supporting 2M, 1M, 500K, and 125K data rates
- Supports up to 14 Bluetooth device connections and master-slave role operations
- ARM CortexM3 32-bit processor, with a main frequency of 12-48MHz
- Built in 150KB ROM and up to 48KB SRAM
- Built in 4Mbits flash memory as user program and data storage space
- Interface: General GPIO, UART interface, SPI interface, I2C interface, PWM output, I2S interface, LED driver
- Built in charging management unit
- Independent watchdog circuit
- Support 240 * 240 pixel LCD color screen
- Supports MIC microphone input and AUDIO speaker output
- Support AT remote upgrade and cloud OTA upgrade
- Support Bluetooth BLUETOTH SIG MESH self-organizing network function
- Supports PCB board mounted antennas (if needed, external antennas can also be supported)

application area

- Bluetooth voice remote control
- intelligent toy
- Intelligent lighting fixtures
- Intelligent sports and fitness equipment
- Smart toothbrushes, smart weight scales, and smart personal care devices
- Smart home appliances, smart home devices
- Intelligent medical devices: health thermometers, heart rate, blood pressure, blood sugar, etc

1. 6 Product specifications

Table 1-6-1 Product Specifications:

Protocol and Interface Standards	
Bluetooth standard	Compliant with Bluetooth V5.0 LE standard
data interface	UART/HSPI/I2C/I2S/IR Remote Control (not used for lighting control)
	GPIO,UART,SPI,I2C,PWM,I2S,LED
I/O port	17 universal I/O ports, all of which can be set as interrupts
CPU	
Main frequency processing speed	12-48Mhz
Memory capacity	
SRAM	150KB ROM, up to 48KB RAM
FLASH	8M Flash ROM
Bluetooth BLE feature	
Transmission power	Up to -1.0dBm transmission power
Encryption Type	AES/CCM
Bluetooth RF parameters (typical values)	
Operating Frequency	2400-2483.5 mhz
Transmission power	≤ -1.0dBm
Working current (typical value)	
Power input VCC	1.8~4.3V
Working current	8 mA
working conditions	
operation temperature	-40ºC to +85ºC
storage temperature	-55ºC to +125ºC
Working humidity	5% to 95% (non condensing)
Physical parameters	
Antenna type	PCB built-in antenna, optional IPEX mount (connected to external antenna)
Product size	17.95 * 10.60 * 2.60 (height) mm
Wireless transmission distance	
Wireless transmission distance	Indoor: 20m, outdoor: 30m (depending on the environment)

1.7 Interface Definition

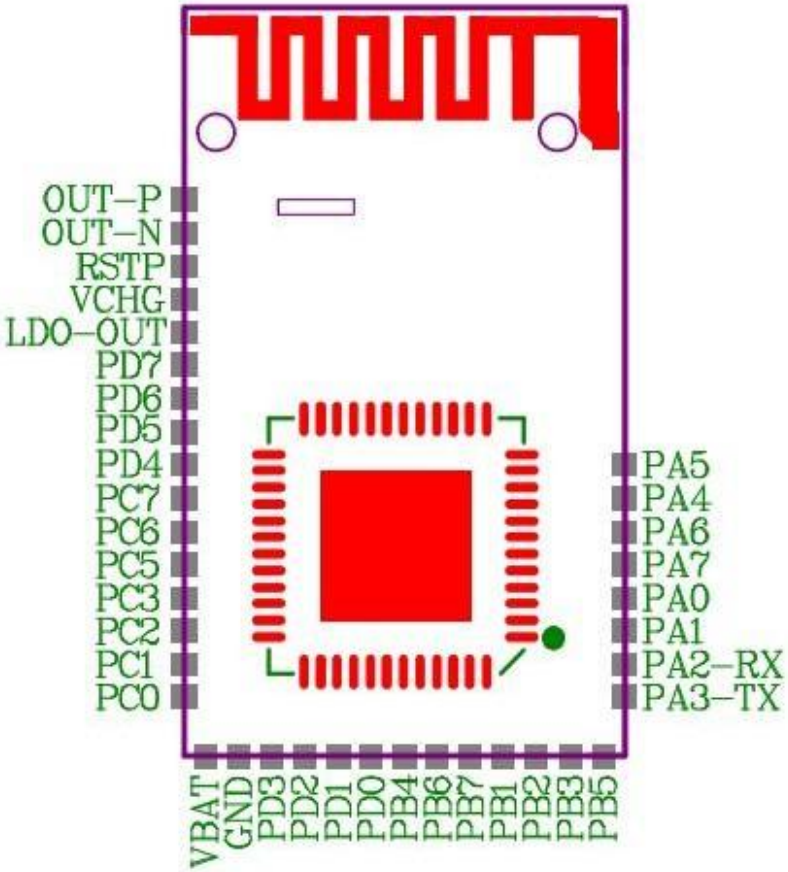

Figure 1-7-1 Pin Identification

Table 1-7-1 Definition of Pin Functions for CHF8ML BLE Module BLE Module

Serial Number	Pin identification	pin type	Function Description
1	OUT-P		
2	OUT-N		
3	RTSP	AI	Global reset (high active)
4	VCHG	PWR	Charger supply input
5	LDO-OUT		
6	PD7	DIO	SDA1/I2SDIN/PWM1/SSPDIN/UTXD0/UTXD1/ANT CTL1/PDMDAT/PWM0/ADC3
7	PD6	DIO	SCL1/I2SDOUT/PWM0/SSPDOUT/URXD0/URXD1/ CLKOUT/PDMCLK/PWM1/ADC2
8	PD5	DIO	SDA0/I2SFRM/PWM5/SSPCSN/UTXD0/UTXD1/ANT CTL0/PDMDAT/PWM4/ADC1
9	PD4	DIO	SDA0/I2SFRM/PWM5/SSPCSN/UTXD0/UTXD1/ANT CTL0/PDMDAT/PWM4/ADC4

10	PC7	DIO	SDA0/I2SFRM/PWM5/SSPCSN/UTXD0/UTXD1/SWV/PDMDAT/PWM
11	PC6	DIO	SDA0/I2SFRM/PWM5/SSPCSN/UTXD0/UTXD1/SWV/PDMDAT/PWM
12	PC5	DIO	SDA0/I2SFRM/PWM5/SSPCSN/UTXD0/UTXD1/SWV/PDMDAT/PWM4
13	PC3	DIO	SDA0/I2SFRM/PWM5/SSPCSN/UTXD0/UTXD1/SWV/PDMDAT/PWM
14	PC2	DIO	SDA0/I2SFRM/PWM5/SSPCSN/UTXD0/UTXD1/SWV/PDMDAT/PWM
15	PC1	DIO	SDA0/I2SFRM/PWM5/SSPCSN/UTXD0/UTXD1/SWV/PDMDAT/PWM
16	PC0	DIO	SDA0/I2SFRM/PWM5/SSPCSN/UTXD0/UTXD1/SWV/PDMDAT/PWM
17	VBAT	PWR	Battery positive supply input
18	GND	GND	Ground
19	PD3	DIO	SDA1/I2SDIN/PWM5/SSPDIN/UTXD0/UTXD1/SWDIO/PDMDAT/PWM
20	PD2	DIO	SDA1/I2SDIN/PWM5/SSPDIN/UTXD0/UTXD1/SWDIO/PDMDAT/PWM
21	PD1	DIO	SDA1/I2SDIN/PWM5/SSPDIN/UTXD0/UTXD1/SWDIO/PDMDAT/PWM
22	PD0	DIO	SDA1/I2SDIN/PWM5/SSPDIN/UTXD0/UTXD1/SWDIO/PDMDAT/PWM
23	PB4	DIO	SDA1/I2SDIN/PWM5/SSPDIN/UTXD0/UTXD1/SWDIO/PDMDAT/PWM
24	PB6	DIO	SDA1/I2SDIN/PWM5/SSPDIN/UTXD0/UTXD1/SWDIO/PDMDAT/PWM
25	PB7	DIO	SDA1/I2SDIN/PWM5/SSPDIN/UTXD0/UTXD1/SWDIO/PDMDAT/PWM
26	PB1	DIO	SDA1/I2SDIN/PWM5/SSPDIN/UTXD0/UTXD1/SWDIO/PDMDAT/PWM
27	PB2	DIO	SDA1/I2SDIN/PWM5/SSPDIN/UTXD0/UTXD1/SWDIO/PDMDAT/PWM
28	PB3	DIO	SDA1/I2SDIN/PWM5/SSPDIN/UTXD0/UTXD1/SWDIO/PDMDAT/PWM
29	PB5	DIO	SDA1/I2SDIN/PWM5/SSPDIN/UTXD0/UTXD1/SWDIO/PDMDAT/PWM

30	PA3-TX	DIO	SDA1/I2SDIN/PWM3/SSPDIN/UTXD0/UTXD1/ANT CTL1/PDMDAT/PWM2
31	PA2-RX	DIO	SCL1/I2SDOUT/PWM2/SSPDOUT/URXD0/URXD1/ ANTCTL0/PDMCLK/PWM3
32	PA1	DIO	SDA0/I2SFRM/PWM1/SSPCSN/UTXD0/UTXD1/ANT CTL0/PDMDAT/PWM0
33	PA0	DIO	SCL0/I2SCLK/PWM0/SSPCLK/URXD0/URXD1/CLK OUT/PDMCLK/PWM1
34	PA7	DIO	SDA1/I2SDIN/PWM1/SSPDIN/UTXD0/UTXD1/ANT TL0/PDMDAT/PWM0
35	PA6	DIO	SCL1/I2SDOUT/PWM0/SSPDOUT/URXD0/URXD1/CLKOUT/ PDMCLK/PW1M1
36	PA4	DIO	SCL0/I2SCLK/PWM4/SSPCLK/URXD0/URXD1/CLK OUT/PDMCLK/PWM5

Table 1-7-2 Description of Pin Types for CHF8ML BLE Module BLE Module

sign	Description and Explanation
I	Digital Input
O	Digital Output
AI	Analog Input
AO	Analog Output
IO	Bidirectional(digital)
OD	Open Drain
PWR	Power
GND	Ground

2 Electrical characteristics

Table 2-1 Recommended Electrical Parameters

parameter	describe	minimum value	Typical values	Maximum value	unit
operation temperature	Working temperature 2 hours after startup	-20	20	105	ºC
Nuclear voltage	N/A	0.9	1.2	1.3	V
I/O voltage	VDDIO	1.65	2.5	3.5	V
Supply Voltage	VBAT	1.8	3.3	4.3	V

Charger voltage	VCHG	4.75	5	5.25	V

Table 2-2 DC Electrical Parameters Table

category	name	minimum value	Maximum value	unit
Input logic low level	VIL	-0.3	0.3*VDDIO	V
Input logic high level	VIH	0.7*VDDIO	VDDIO+0.3	V
Output logic low level	VOL	-	0.1*VDDIO	V
Output logic high level	VOH	0.8*VDDIO	-	V

Table 2-3 Power Consumption Parameters

Working mode	average value	Maximum value	unit
TX peak current (0dB)	N/A	8	mA
RX peak current	N/A	9.7	mA
Deep sleep current (48K RAM hold)	6.1	N/A	μA
ShutDown Current	2.7	N/A	μA

Table 2-4 Environmental Parameters

Working mode	minimum value	Maximum value	unit
operation temperature	-45	+85	ºC
storage temperature	-55	+125	ºC
Working humidity (non condensing)	5%	95%	-
Storage humidity (non condensing)	5%	95%	-

3 RF parameters

3.1 General wireless characteristic parameters

Table 3-1 General Wireless Characteristics Parameters

name	condition	minimum value	typical	Maximum value
Frequency Range(MHz)	-	2402	-	2480

3. 2 Bluetooth Rx characteristic parameters

Table 3-2 Bluetooth Reception Characteristics Parameter Table

name	condition	minimum value	typical	Maximum value
Sensitivity (dBm)	PER ≤30.8%	-95	-	-
Maximum Input Level (dBm)	PER ≤30.8%		1	-
C/I	C/I co-channel (dB)	21	-	-
	C/I +1MHz (dB)	15	-	-
	C/I -1MHz (dB)	15	-	-
	C/I +2MHz (dB)	-15	-	-
	C/I -2MHz (dB)	-17	-	-
	C/I +3MHz (dB)	-9	-	-
	C/I -3MHz (dB)	-27	-	-
	C/I Image+1MHz (dB)	-15	-	-
	C/I Image-1MHz (dB)	-15	-	-
Blocker Power (dBm)	70~2000MHz, Wanted signal level =-67dBm	-30	-	-
	2003~2399MHz, Wanted signal level =-67dBm	-35	-	-
	2484~2997MHz, Wanted signal level =-67dBm	-35	-	-
	3000MHz~6000MHz, Wanted signal level =-67dBm	-30	-	-
Max PER Report Integrity	Wanted signal: -30dBm	-	50%	-
Max Intermodulation level(dBm)	Wanted signal (f0): -64dBm Worst intermodulation level @2f1-f2=f0, |f1-f2|=n MHz,n=3, 4, 5… -	-50	-	-

3.3 Bluetooth Tx characteristic parameters

Table 3-3 Bluetooth Transmission Characteristics Parameter Table

name	condition	minimum value	typical	Maximum value
Maximum Output Power (dBm)	N/A	-30	0	-1.0
	+2MHz	-	-	-41
	-2MHz	-	-	-41

Adjacent Channel Power Ratio (dBm)	≥+3MHz	-	-	-42
	≤-3MHz	-	-	-42
Modulation Characteristics	Δf1 avg (kHz)	-	240	-
	Δf2max (kHz)	185	-	-
	Δf2 max Pass Rate (%)	-	100	-
	Δf2 avg /Δf1 avg	-	0.9	-
Carrier Frequency Offset and Drift	Average Fn (kHz)	-	12.5	-
	Drift Rate (kHz/50μs)	-	10	-
	Avg Drift (kHz/50μs)	-	10	-
	Max Drift (kHz/50μs)	-	10	-
Output power of second harmonic(dBm)	N/A	-	-50	-
Output power of third harmonic(dBm)	N/A	-	-50	-

4 operating environment

4.1 Static discharge parameter parameters

Table 4-1 Static Discharge Parameters Table

name	symbol	refer to	grade	Maximum value	unit
Static discharge voltage (Human body model)	VESD (HBM)	Temperature: 16 ℃~35 ℃ in accordance with ANSI/ESDA/JEDEC JS-001-2014	2	2000	V

4.2 Recommended Operating Conditions

Table 4-2 Recommended Operating Conditions Table

symbol	parameter	minimum value	median	Maximum value	unit
VDD3	3.3V Supply Voltage	1.8	3	4.3	V
TA	Ambient operating temperature	-40	25	105	ºC
TS	Storage temperature	-40	25	125	ºC

5 Reflow soldering conditions

1 Heating method: Conventional convection or IR convection

2 Allowable reflow soldering frequency: 2 times, based on the following tilted heating conditions

3 Peak temperature:<250 ° C

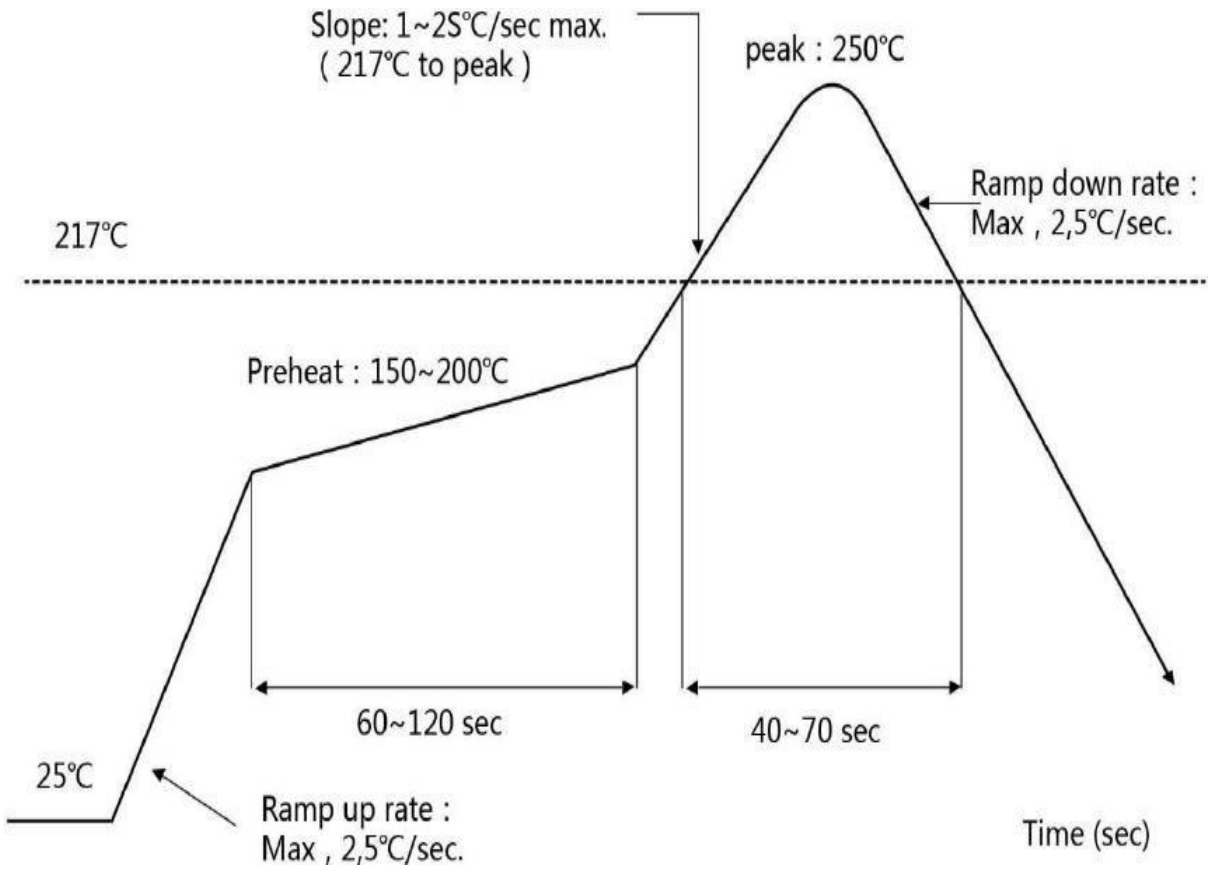

Table 5-1 Reflow
Soldering Condition
Diagram

6 Application Circuit

Table 6-1 Application Circuit Diagram

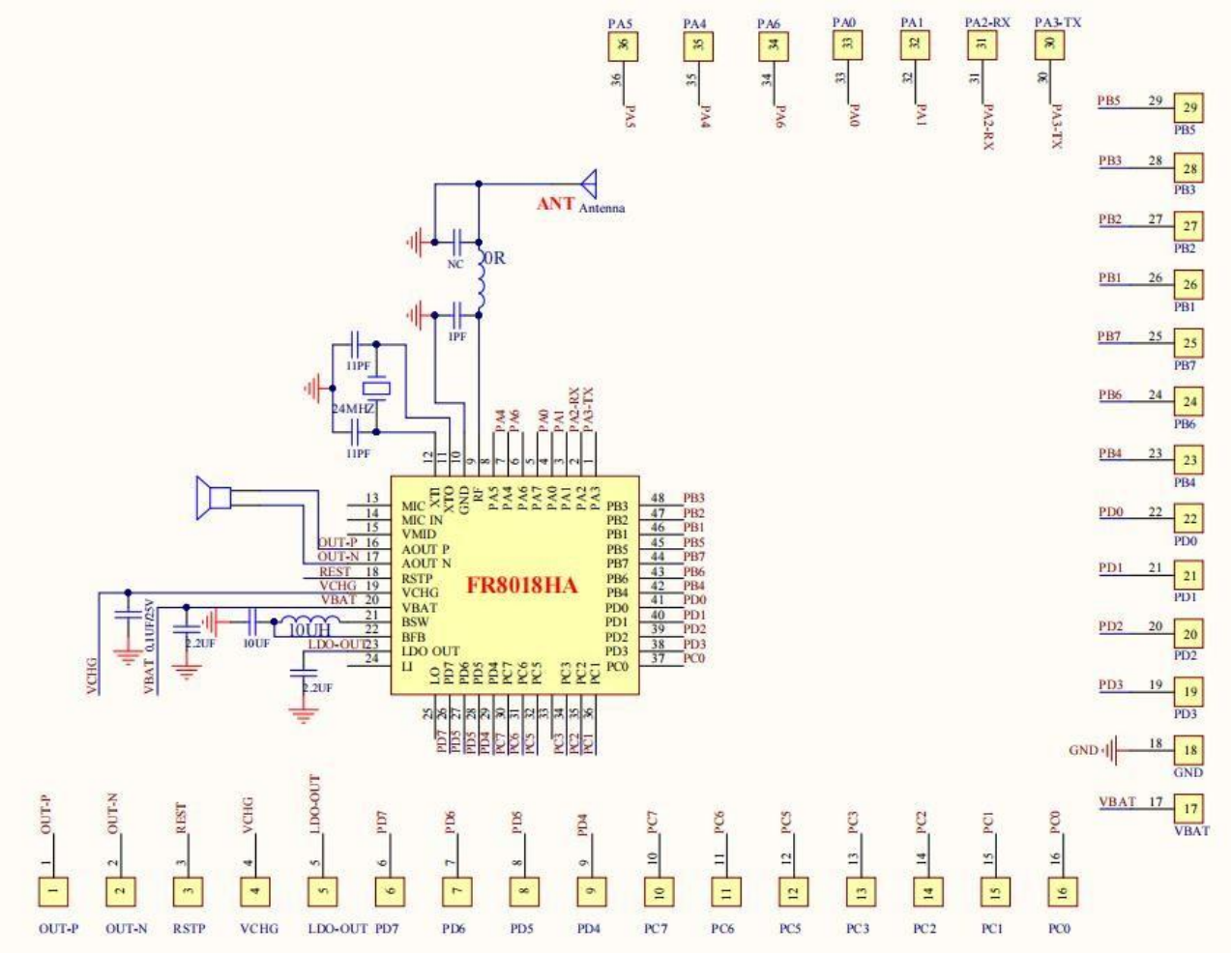

7 AT instruction

7.1 AT command configuration

- The AT+instruction refers to the instruction set used by users to transmit commands to modules through UART in command mode. The usage format of the AT+instruction will be explained in detail later.
- After successful power on startup, the module can be configured through UART.
- The default UART port parameters for the module are: baud rate 9600, no checksum, 8-bit data bits, and 1-bit stop bit.

7.2 Overview of AT Instructions

The AT+instruction can be directly input through serial debugging programs such as CRT. The AT+instruction uses an ASCII based command line, and the instruction format is as follows:

1 format description

<>: indicates mandatory parts []: indicates optional parts

2 Command Message

AT+[op][para-1,para-2,para-3,para-4…] <CR> <LF>

AT+: Command message prefix;

[op]: Instruction operator, specifying whether it is a parameter setting or a query;

=": represents parameter setting"? ": represents query

[para-n]: Input for parameter settings, not required for queries;

<CR>: End symbol, 回car, ASCII code 0X0D;

<LF>: End character, line break, ASCII code 0X0A;

[SPACE]: Space symbol, space, ASCII code 0X20

7.3 response message

<CR><LF>+<RSP>[op][para-1,para-2,para-3,para-4…]<CR><LF>

+Response message prefix;

RSP: Response string, including: "OK": indicates success

ERR ": indicates failure

[para-n]: Return 回parameters when querying or error code when encountering errors

<CR>: ASCII code 0x0d;

<LF>: ASCII code 0x0a;

[SPACE]: Space symbol, space, ASCII code 0X20

8 Packaging method

Shipping packaging method A: Using anti-static vacuum formed tray boxes, each tray box is 100 PCS, and the tray box size is shown in the following figure.

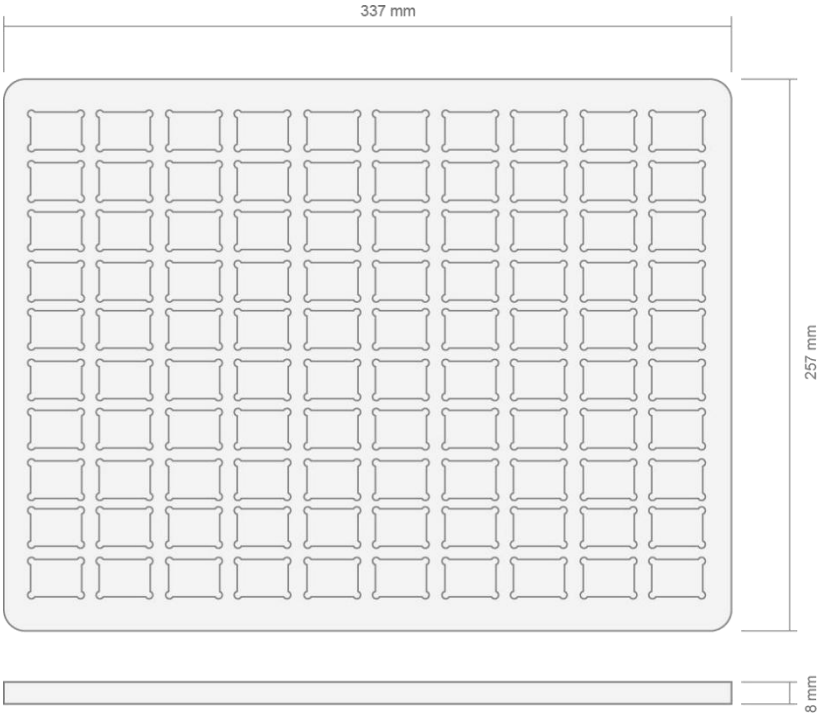

Figure 8-1 Dimensions of vacuum formed tray box

Shipping packaging method B: The tape method is adopted, with 2000 PCS per roll, and the tape size is shown in the following figure.

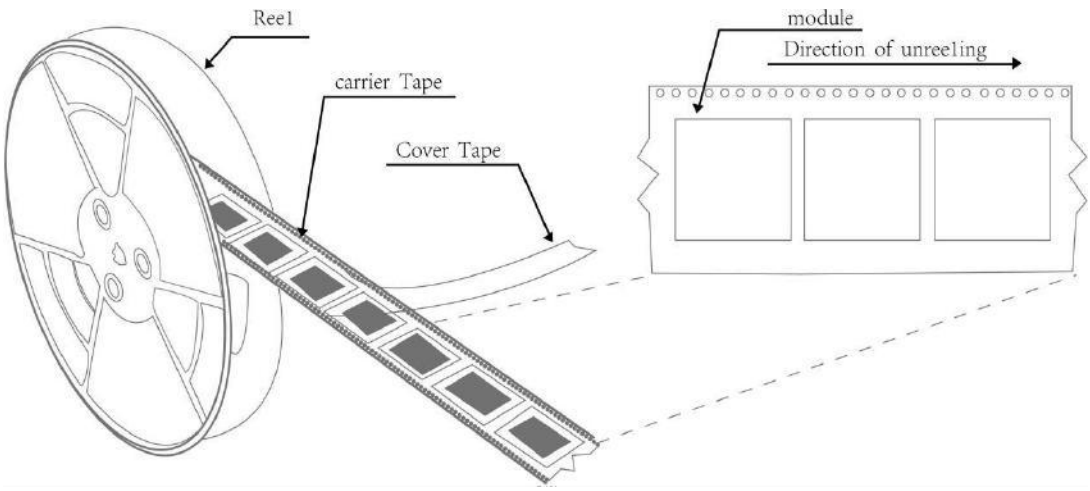

Figure 8-2 Packaging Tape Diagram

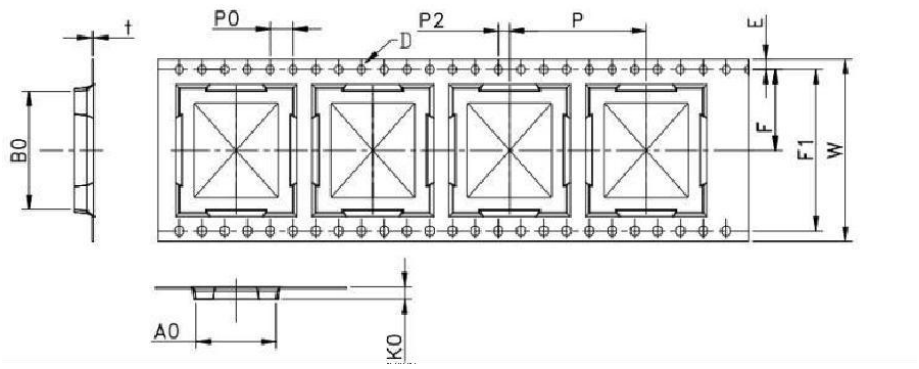

9 Ordering Information

Due to the fact that the CHF8ML BLE Module module is available in two types: shielded and unshielded, as well as in two types of packaging: disk mounted and tape wrapped, please carefully read the detailed information in the table below before placing an order.
If the module needs to be burned with a special program during shipment, please specify. If there are special requirements for the MAC code required by the module during shipment, please specify

Table 9-1 Order Information

PRODUCT MODEL	Shielding cover	Pre burning program	MAC code	Minimum order quantity per batch
CHF8ML BLE Module	have	not have	No requirements	1K

10 Certification and safety regulations

authentication	describe
FCC	Verified, PASS
CE	Verified, PASS
RoHS	Verified, PASS
BQB	Verified, PASS
SRRC	Verified, PASS

11 precautions

The CHF8ML BLE Module module adopts a dual row pin mounting method. In order to achieve optimal RF performance for the terminal product, the following principles must be followed:

1 Power supply: Use an independent LDO to supply power to the module. It is recommended to choose an LDO with a low ripple factor, and the module needs to be reliably grounded. Please note that the positive and negative poles of the power supply are connected correctly. Reverse connection may cause permanent damage to the module.

2 Layout: It is recommended to place the module as far as possible in an open area along the edge of the base plate, with the antenna facing outward.

3 Wiring: The power wiring for the module on the base plate should be as thick as possible (0.5A current). The PCB boards (double-sided and multi-layer boards) under the antenna in the module on the base plate need clearance and cannot be copper plated, that is, all layout layers below the antenna should not have grounding or signal traces.

4 It is best not to have metal components near the antenna, otherwise the communication distance of the module will be reduced to varying degrees in different environments.

12 Static electricity and other precautions

Modules may be damaged due to electrostatic discharge, and it is recommended that all modules be handled under the following preventive measures:

1 Anti static measures must be followed and modules cannot be held naked.

2 The module must be placed in an area that can prevent static electricity.

3 Anti static circuits at high voltage or high frequency inputs should be considered in product design.

4 The result of static electricity may be a slight decrease in performance to the failure of the entire device. Due to the fact that even very small parameter changes can cause the device to fail to meet its certification requirements, the module is more susceptible to damage

Humidity sensitivity:

According to the standard IPC/JEDEC J-STD-020, the module is a level 3 humidity sensitive device. Please comply with all relevant requirements for using such components. In addition, customers must pay attention to the following conditions:

a) The calculated shelf life of sealed bags is 12 months at<40 º C and<90% relative humidity (RH).

b) Environmental conditions during production: According to IPC/JEDEC J-STD-033A paragraph 5, 30 º C/60% relative humidity. c) If conditions permit, the maximum time between opening the sealed bag and the reflux process must be 168 hours.
d) Comply with paragraph 5.2 of IPC/JEDEC J-STD-033A. e)
If conditions b) or c) are not followed, baking is required.

f) If the humidity indicator inside the bag indicates 10% or more, baking is required.

FCC Statement

This device complies with part 15 of the FCC rules. Operation is subject to the following two conditions: (1) this device may not cause harmful interference, and (2) this device must accept any interference received, including interference that may cause undesired operation.

Changes or modifications not expressly approved by the party responsible for compliance could void the user's authority to operate the equipment.

NOTE: This equipment has been tested and found to comply with the limits for a Class B digital device, pursuant to part 15 of the FCC Rules. These limits are designed to provide reasonable protection against harmful interference in a residential installation. This equipment generates uses and can radiate radio frequency energy and, if not installed and used in accordance with the instructions, may cause harmful interference to radio communications. However, there is no guarantee that interference will not occur in a particular installation. If this equipment does cause harmful interference to radio or television reception, which can be determined by turning the equipment off and on, the user is encouraged to try to correct the interference by one or more of the following measures:

- Reorient or relocate the receiving antenna.
- Increase the separation between the equipment and receiver.
- Connect the equipment into an outlet on a circuit different from that to which the receiver is connected.
- Consult the dealer or an experienced radio/TV technician for help important announcement

Important Note:

Radiation Exposure Statement

This equipment complies with FCC radiation exposure limits set forth for an uncontrolled environment. This equipment should be installed and operated with minimum distance 20cm between the radiator and your body.

This transmitter must not be co-located or operating in conjunction with any other antenna or transmitter.

Country Code selection feature to be disabled for products marketed to the US/Canada.

This device is intended only for OEM integrators under the following conditions:

1. The antenna must be installed such that 20 cm is maintained between the antenna and users, and
2. The transmitter module may not be co-located with any other transmitter or antenna,

As long as the conditions above are met, further transmitter testing will not be required. However, the OEM integrator is still responsible for testing their end-product for any additional compliance requirements required with this module installed.

Important Note:

In the event that these conditions cannot be met (for example certain laptop configurations or co-location with another transmitter), then the FCC authorization is no longer considered valid and the FCC ID cannot be used on the final product. In these circumstances, the OEM integrator will be responsible for re-evaluating the end product (including the transmitter) and obtaining a separate FCC authorization.

End Product Labeling

The final end product must be labeled in a visible area with the following"

Contains FCC ID: **2BQJM-CHF8ML** "

Manual Information to the End User

The OEM integrator has to be aware not to provide information to the end user regarding how to install or remove this RF module in the user's manual of the end product which integrates this module.

The end user manual shall include all required regulatory information/warning as show in this manual.

Integration instructions for host product manufacturers according to KDB 996369 D03 OEM Manual v01r01

2.2 List of applicable FCC rules

CFR 47 FCC PART 15 SUBPART C has been investigated. It is applicable to the modular transmitter

2.3 Specific operational use conditions

This module is stand-alone modular. If the end product will involve the Multiple simultaneously transmitting condition or different operational conditions for a stand-alone modular transmitter in a host, host manufacturer have to consult with module manufacturer for the installation method in end system.

2.4 Limited module procedures

Not applicable

2.5 Trace antenna designs

Not applicable

2.6 RF exposure considerations

This equipment complies with FCC radiation exposure limits set forth for an uncontrolled environment. This equipment should be installed and operated with minimum distance 20cm between the radiator & your body.

2.7 Antennas

This radio transmitter **FCC ID:2BQJM-CHF8ML** has been approved by Federal Communications Commission to operate with the antenna types listed below, with the maximum permissible gain indicated. Antenna types not included in this list that have a gain greater than the maximum gain indicated for any type listed are strictly prohibited for use with this device.

Antenna No.	Model No. of antenna:	Type of antenna:	Gain of the antenna (Max.)		Frequency range:
			Antenna 1	Antenna 2	
Bluetooth	/	PCB Antenna	-4.26	N/A	2402-2480MHz

2.8 Label and compliance information

The final end product must be labeled in a visible area with the following" Contains **FCC ID:2BQJM-CHF8ML**".

2.9 Information on test modes and additional testing requirements

Host manufacturer is strongly recommended to confirm compliance with FCC requirements for the transmitter when the module is installed in the host.

2.10 Additional testing, Part 15 Subpart B disclaimer

Host manufacturer is responsible for compliance of the host system with module installed with all other applicable requirements for the system such as Part 15 B.

2.11 Note EMI Considerations

Host manufacture is recommended to use D04 Module Integration Guide recommending as "best practice" RF design engineering testing and evaluation in case non-linear interactions generate additional non-compliant limits due to module placement to host components or properties.

2.12 How to make changes

This module is stand-alone modular. If the end product will involve the Multiple simultaneously transmitting condition or different operational conditions for a stand-alone modular transmitter in a host, host manufacturer have to consult with module manufacturer for the installation method in end system. According to the KDB 996369 D02 Q&A Q12, that a host manufacture only needs to do an evaluation (i.e., no C2PC required when no emission exceeds the limit of any individual device (including unintentional radiators) as a composite. The host manufacturer must fix any failure.