MAGIC KIDS VIDEO WALKIE-TALKIE USER MANUAL

Please read this user manual carefully before using the product and keep it for future reference.
If you have any questions or need assistance, please contact us at fabeto@uergogo.com.

I. Product Overview

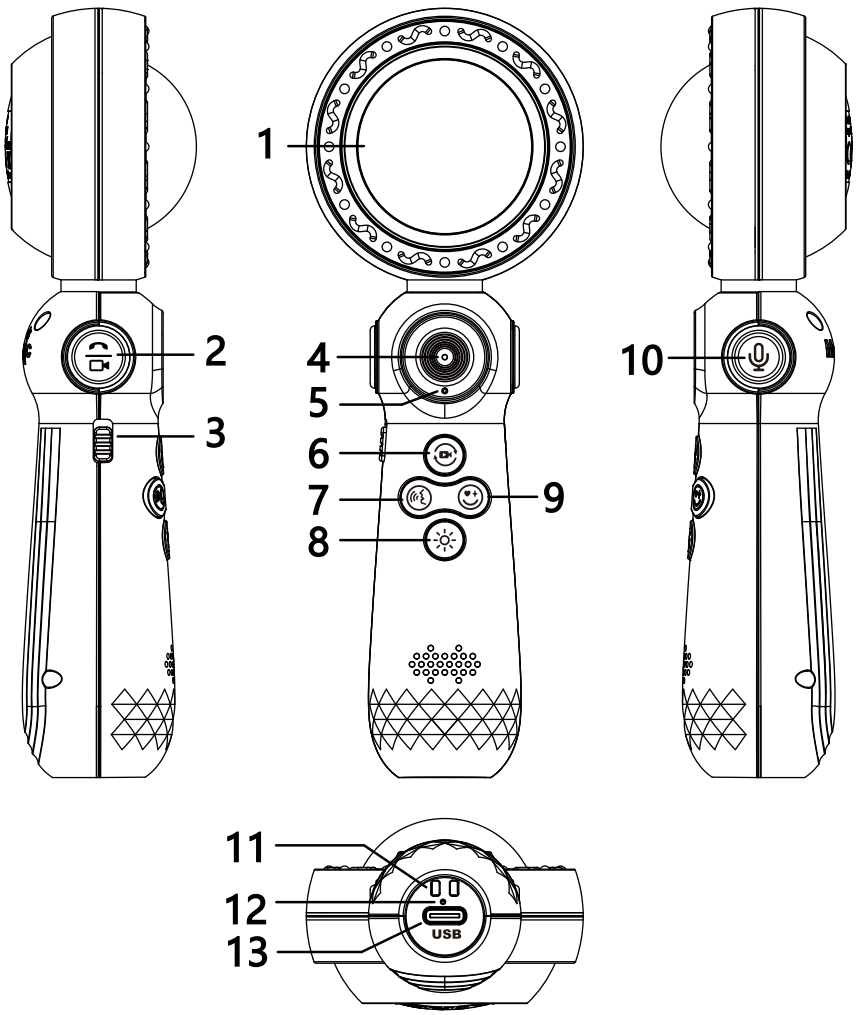

1-Display Screen
2-Audio/Video Mode Button
3-Power Switch
4-Camera
5-Microphone
6-Display Switch Button
7-Voice Effects Button
8-Ambient Light Button
9-Sticker Button
10-Talk Button
11-Lanyard Hole
12-Charging Indicator Light
13-Type-C Charging Port

II. Power On / Off

1. The power switch is set to OFF before shipping.
2. To turn on the device, slide the power switch to the ON position.
3. To turn off the device, slide the power switch to the OFF position.
4. Please fully charge the device before using it for the first time.
5. To restart the device, slide the power switch to OFF, then slide it back to ON.

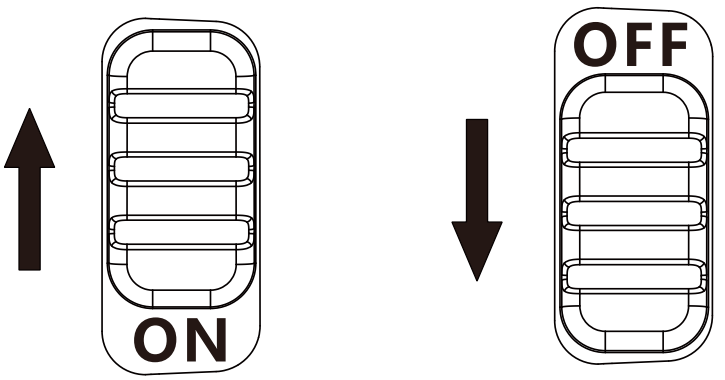

Power ON　　Power OFF

III. Charging

1. Connect the included charging cable to the Type-C charging port.
2. Use a 5V/1A charger only. Before charging, make sure the charger output is 5V.
3. The charging indicator light will turn red while charging.
4. When the device is fully charged, the charging indicator light will turn off automatically.

IV. Pairing and Connection

1. Each two-pack is factory-paired and ready to use.
2. Turn on both walkie-talkies and they will connect automatically.
3. This product uses a 2.4 GHz wireless connection.
4. Units from different sets cannot be paired with each other. If you purchase multiple sets, please use each pair as originally packaged.

V. Basic Operation

1. Standby Mode

1.1. Slide the power switch to ON. The device will enter standby mode.

1.2. When both walkie-talkies are turned on, they will connect automatically and enter video call mode.

2. Audio/Video Mode Switch

2.1 Press the " " Audio/Video Mode Button to switch between Video Call Mode and Voice-Only Mode after the two walkie-talkies are connected.

2.2 In Video Call Mode, the other person can see your camera image.

2.3 In Voice-Only Mode, your video is turned off, and the Voice-Only Icon " " will appear on the screen.

2.4 When the Voice-Only Icon appears, the other person cannot see your camera image and can only hear your voice.

2.5 Press the " " Audio/Video Mode Button again to return to Video Call Mode.

3. Press-to-Talk Function

3.1. Press and hold the " " Talk Button to speak.

3.2. Release the Talk Button when you finish speaking.

3.3. This product uses one-way voice transmission. The other person can speak only after you release the Talk Button.

4. Display Switch Function

4.1. Press the " " Display Switch Button to switch the screen view.

4.2. You can switch between your own camera view and the other walkie-talkie’ s camera view.

5. Voice Effects

5.1 Press the " " Voice Effects Button to switch between different voice effects.

5.2 The voice effects switch in the following order:
Normal → Girl → Alien → Robot

5.3 The selected voice effect icon will appear on the screen.

6. Ambient Light

6.1. Press the " " Ambient Light Button to switch between lighting modes.

6.2. The light modes cycle in this order: green light, red light, blue light, and flashing RGB light.

7. Sticker Effects

7.1. Press the " " Sticker Button to choose different fun sticker effects.

7.2. The selected sticker will appear on the screen.

8. Rotating Camera

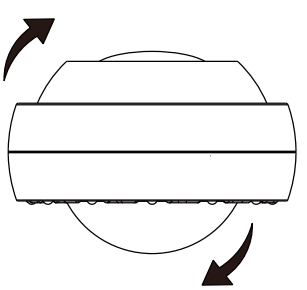

8.1. The camera can rotate 180 degrees forward and backward.

8.2. A clicking sound is normal when rotating the camera.

9. Auto Power-Off

9.1. The device will automatically power off after 15 minutes of inactivity.

9.2. If the product will not be used for a long time, slide the power switch to OFF.

VI. Button Operation Summary

Button	Operation
Power Switch	Slide to ON/OFF
Audio/Video Mode Button	Short press: switch video call / voice-only mode
Display Switch Button	Short press: switch between your own view and the other person's view
Voice Effects Button	Short press: switch voice effects
Ambient Light Button	Short press: switch light modes
Sticker Button	Short press: choose sticker effects
Talk Button	Press and hold: speak; release: stop speaking

VII. Safety Notes

1. Use this product only in dry conditions. Do not expose it to rain or water.
2. This product is not waterproof.
3. The actual communication range may vary depending on walls, obstacles, signal interference, and the surrounding environment.
4. For best performance, use the product in an open area.
5. Do not disassemble, modify, or repair the product by yourself.
6. Keep the product away from fire, high temperatures, and direct sunlight for long periods.

VIII. Product Specifications

Item	Specification
Product Name	Magic kids video walkie-talkie
Model	M1
Screen	2.0-inch IPS Screen
Camera	0.3 MP
Battery Capacity	3.7V 650mAh
Language	English
Charging Port	Type-C
Input	5V/1A
Wireless Connection	2.4 GHz
Operating Temperature	-20°C to 60°C
Storage Temperature	-30°C to 70°C
Product Size	216X88X39mm

IMPORTANT SAFETY WARNINGS

- WARNING: Not suitable for children under 36 months. Long cord. Strangulation hazard.
- Do not mix old and new batteries.
- Do not mix alkaline, standard carbon-zinc, or rechargeable batteries.

⚠ **WARNING:**
CHOKING HAZARD-Small parts.
Not for children under 3 yrs

RoHS

Made in China

FCC Warning

This device complies with part 15 of the FCC Rules. Operation is subject to the following two conditions:
(1) This device may not cause harmful interference, and (2) this device must accept any interference received, including interference that may cause undesired operation.

Any Changes or modifications not expressly approved by the party responsible for compliance could void the user's authority to operate the equipment.

Note: This equipment has been tested and found to comply with the limits for a Class B digital device, pursuant to part 15 of the FCC Rules. These limits are designed to provide reasonable protection against harmful interference in a residential installation. This equipment generates uses and can radiate radio frequency energy and, if not installed and used in accordance with the instructions, may cause harmful interference to radio communications. However, there is no guarantee that interference will not occur in a particular installation. If this equipment does cause harmful interference to radio or television reception, which can be determined by turning the equipment off and on, the user is encouraged to try to correct the interference by one or more of the following measures:
-Reorient or relocate the receiving antenna.
-Increase the separation between the equipment and receiver.
-Connect the equipment into an outlet on a circuit different from that to which the receiver is connected.
-Consult the dealer or an experienced radio/TV technician for help.

The device has been evaluated to meet general RF exposure requirement. The device can be used in portable exposure condition without restriction.