CityFlee®

Automatic Pet Feeder User Manual (WiFi Version)

XWSQ02

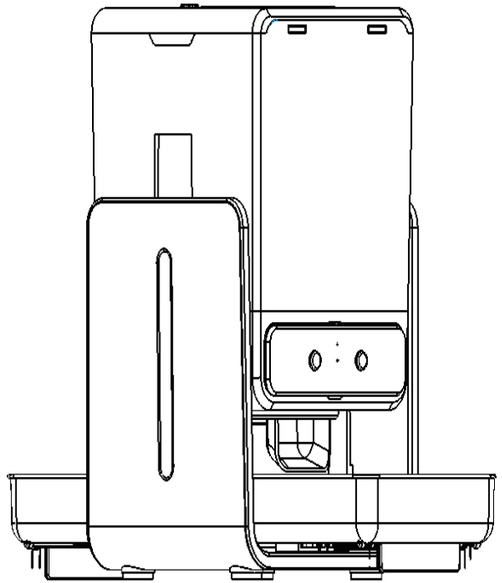

Please read the user manual carefully before using the product and keep it properly.

Contents

Packing List 01
Product Introduction 02
Product Specifications 05
Product Installation (Mechanism) 06
Product Use 09
Product Use – Control Panel Functions 10
WiFi Setup Guide 12
The Desired Amount of Kibbles 15
Cleaning and Maintenance 17
Important Notes 19
Safety Precautions 20
Simple Troubleshooting 21
Contact Us 22

Packing List

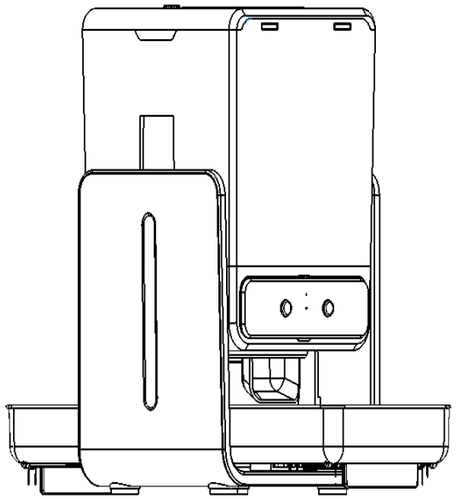

Main Unit	1
Feeding Bowl Bracket	1
Feeding Bowl Support	2
Desiccant	1
TYPE-C Charging Cable	1
Adapter	1
User Manual	1
304 Stainless Steel Food Bowls	2

Product Introduction

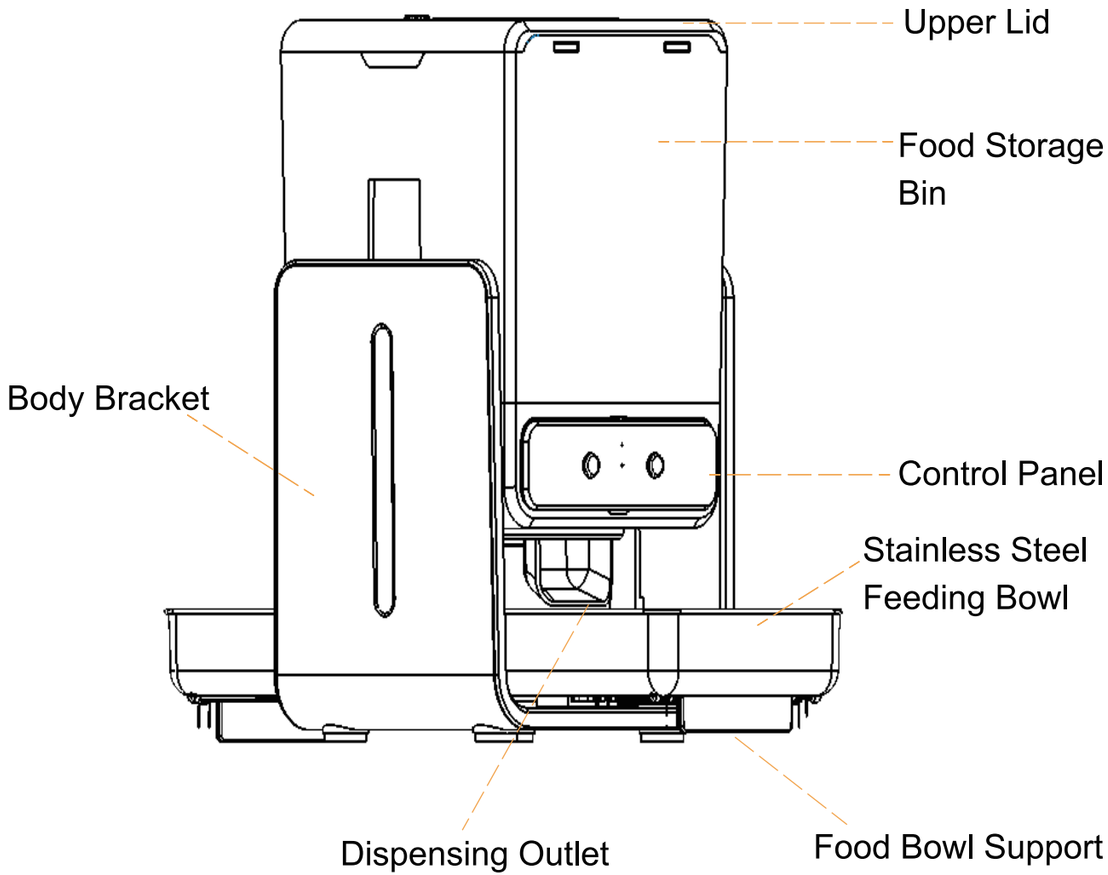

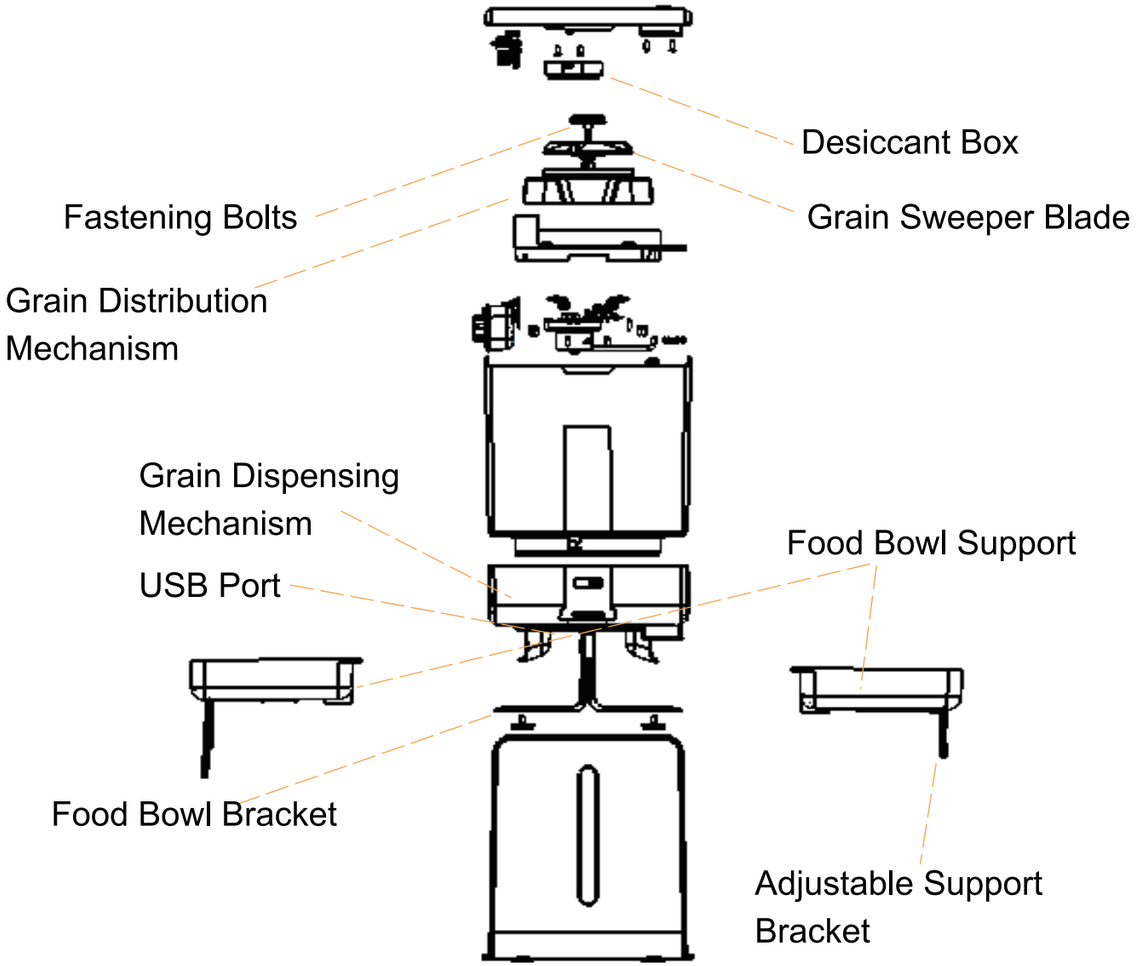

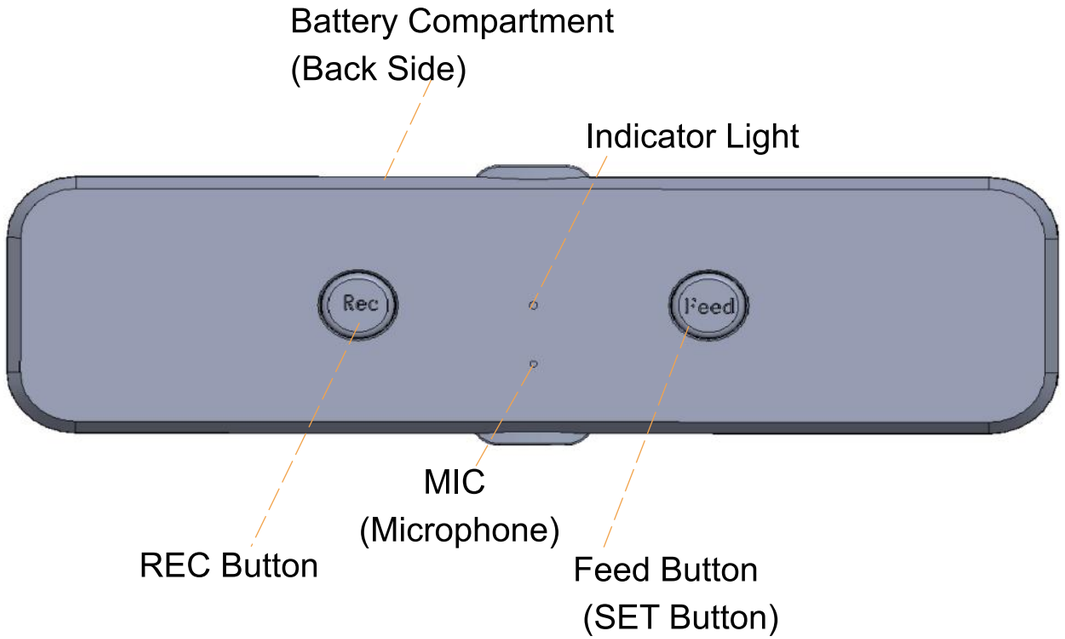

- REC Button: Press to record a voice message.
- Feed Button: Press to manually dispense one portion of food.
- Press and hold both REC and Feed buttons for 5 seconds to lock or unlock the panel. If there is no operation for 60 seconds, the device will enter child lock mode automatically.
- Battery Compartment: 4 AA zinc-carbon batteries (Note: When using batteries alone, network connection is not supported. Parameter settings require Type-C power supply.)

Product Specifications

Product Name:	Automatic Pet Feeder
Product Model:	XWSQ02
Input Voltage:	DC6V (4 AA zinc-carbon batteries) or Type-C 5V
Pet Food Storage Capacity:	5.0L
Product Dimensions:	415 x 195 x 350 mm
Product Material:	304 Stainless Steel + ABS + TPE
Suitable For Pets:	2.8kg
Suitable For Pets:	Cats and Small Dogs
Kibble Size:	3–13mm

Product Installation (Mechanism)

① Remove the product from the packaging. Open the upper lid and take out the control panel, stainless steel bowl, bowl bracket, bowl support, and the desiccant (to be installed later) from the food storage container (as shown below).

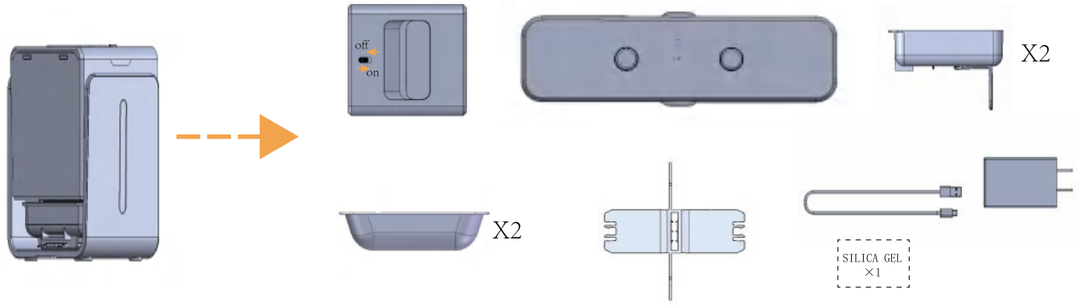

②Pull out the handles on both sides of the grain dispensing mechanism, then lift the main unit (food storage bin + dispensing mechanism) completely and place it on a flat surface, such as a table or floor (as shown below). Ensure that the food storage bin and dispensing mechanism latches are in the locked position and do not wobble. Check if the fastening bolts are loose—if they are, tighten them.

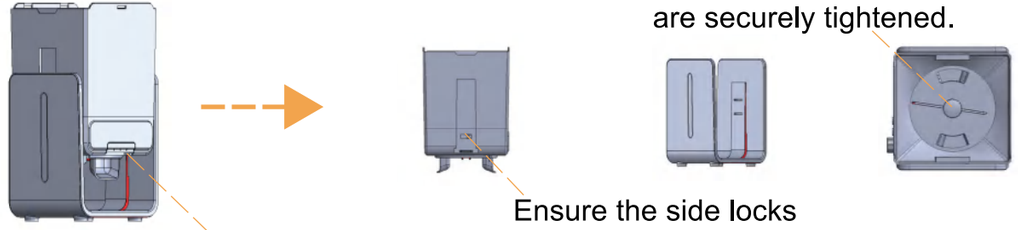

Ensure the fastening bolts are securely tightened.

Pull both side handles outward.

Ensure the side locks are in the locked position.

③ Flip the main unit over, then push Food Bowl bracket into the slot at the bottom of the dispensing mechanism, following the direction of the arrow on the slot, until it clicks into place. Then, attach the two bowl brackets by following the arrow directions (as shown below).

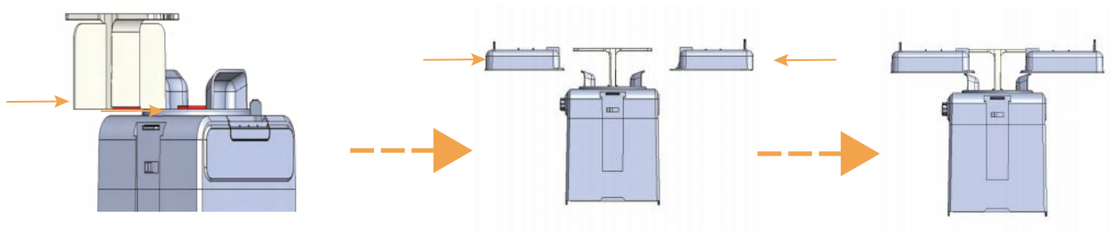

④Pull the handles, align the slots on both sides of the food storage bin with the slots on the body bracket, and slide it down to the desired installation height (there are two available height positions). Release the handles, and the main unit will automatically slide into place and lock securely with the latch on the body (as shown below).

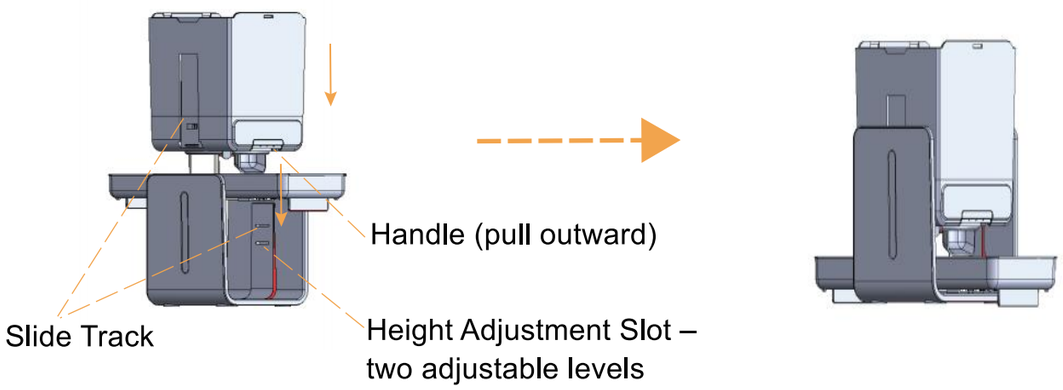

⑤ Install the left and right stainless steel food bowls. Add food into the bowls. Remove the outer packaging of the desiccant, place it into the desiccant compartment, and close it securely. Then, put the upper lid back on (as shown below).

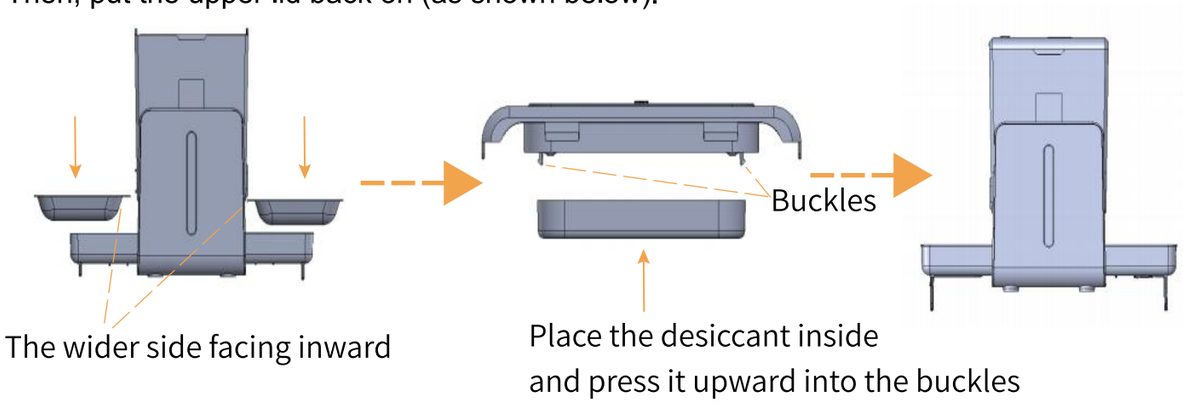

⑥ Insert four AA carbon batteries into the main control panel (pay attention to the polarity as shown below). After setting the parameters (see the panel function introduction page), insert the panel into the main unit to begin use.

Note: Type-C power supply is required for network connectivity. (The cable should pass through the square hole at the bottom of the body bracket, then be inserted into the Type-C port at the bottom of the food dispensing mechanism, as shown below. The other end connects to the power adapter.)

⑦ Once installation and parameter settings are complete, the feeder is ready for use.

Product Use

Introduction to Control Panel Functions

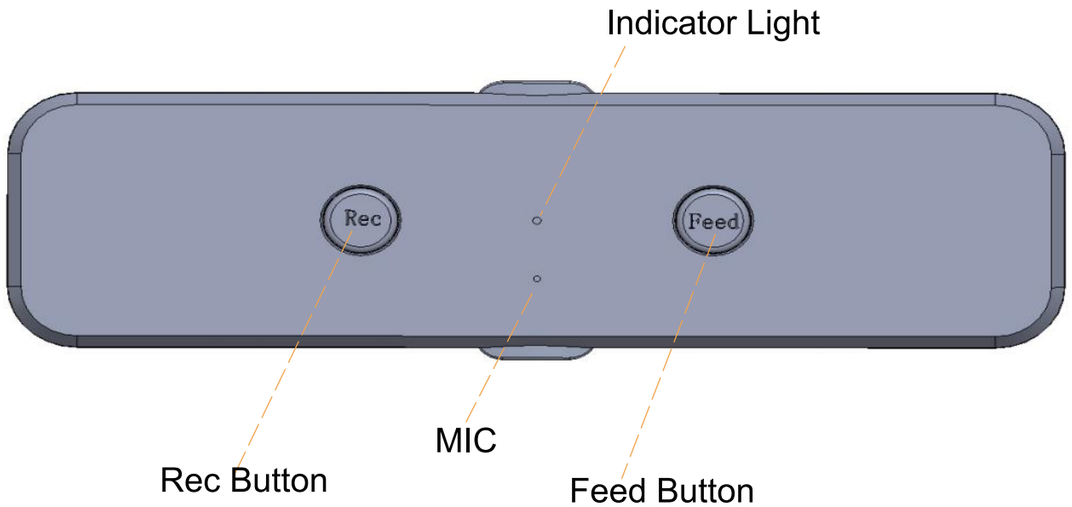

WiFi Status Indicator Light:

Blue Flashing: Waiting to connect or network disconnected

Blue Solid: Successfully connected to WiFi

Red Flashing: Low battery

Red Solid: Running on battery power

Product Use – Control Panel Functions

Main Menu

1.Unlocking the Screen

Press and hold both the REC and Feed buttons simultaneously for 5 seconds to unlock the screen or disable the child lock.

(Indicator light flashes red and blue once.)

If there is no operation within 60 seconds, the screen will automatically re-enter child lock mode.

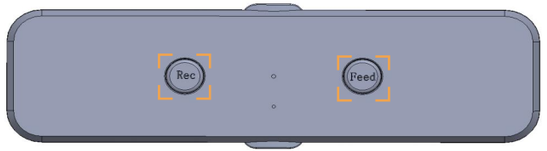

2.Recording

A. While unlocked, press and hold the REC button.

You will hear a prompt sound indicating that recording has started.

Release the REC button to stop recording (as long as the recording does not exceed the storage limit).

The recorded message will play automatically once, then the recording process ends.

B. To re-record, repeat the steps in section A.

C. Short press the REC button to play the recorded message.

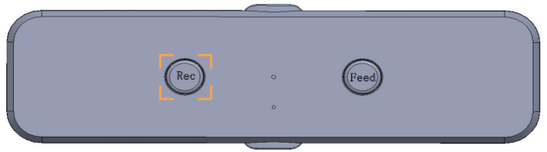

3.Manual Feeding
While unlocked, short press the Feed button to dispense one portion of food, followed by automatic playback of the recorded message.

Note: This function only works properly when the control panel is correctly installed on the main unit.

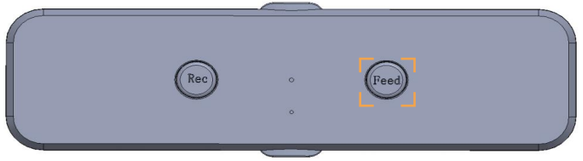

4.Child Lock
Press and hold both the REC and Feed buttons for 5 seconds to lock or unlock the panel.
The indicator light will flash red and blue once, and the device will enter child lock mode.

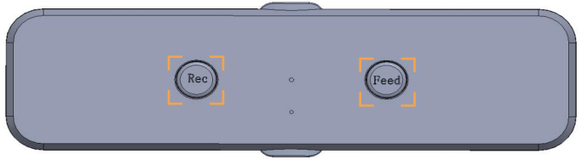

5. Restore Factory Settings
While unlocked, press and hold the Feed button for about 5 seconds.
You will hear a prompt sound indicating that the system has been restored to factory settings.

⚠ Note: All settings will be erased after factory reset.

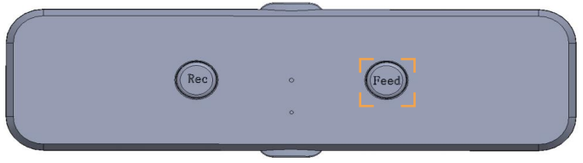

WiFi Setup Guide

1. Initial Setup
Connect the feeder to a USB power source.
Note: Network setup cannot be completed while using battery power.
Check if the WiFi indicator light is flashing blue. If not, press and hold the Feed button for 5 seconds to reset.
Release when the blue light starts flashing — the feeder is now in pairing mode.

2. Download and Install the App
Scan the QR code on the right or search for “Smart Life” in your app store.
Select your country from the dropdown menu, then download and install the app.

3. Register and Log In
Open the app and follow the on-screen instructions to create an account and log in.

4. Add Device
On the app’s home screen, tap the “+” icon in the top right corner.
Follow the prompts to add your feeder and complete the WiFi setup.

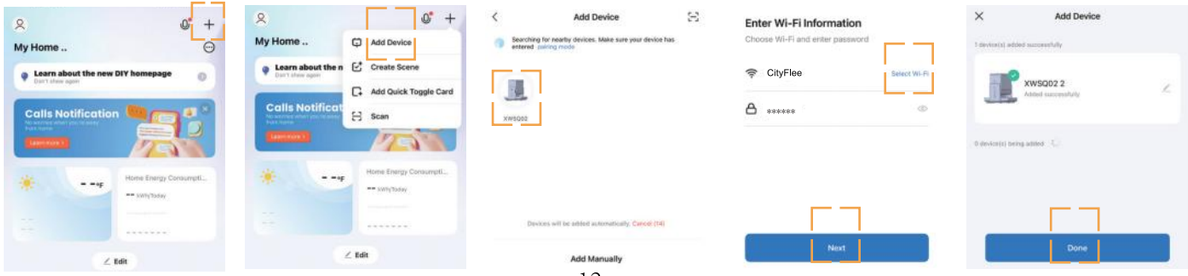

5. Feeding Schedule Setup

After adding the device, tap the device icon to enter the Feeding Schedule setup screen.
Tap Feeding Schedule, then tap Add.
Set the feeding time, day(s) of the week, and the number of servings per meal according to your preference.
Finally, tap Save.

(Note: You can set up to 10 feeding time periods, and the maximum servings per meal is 12.)

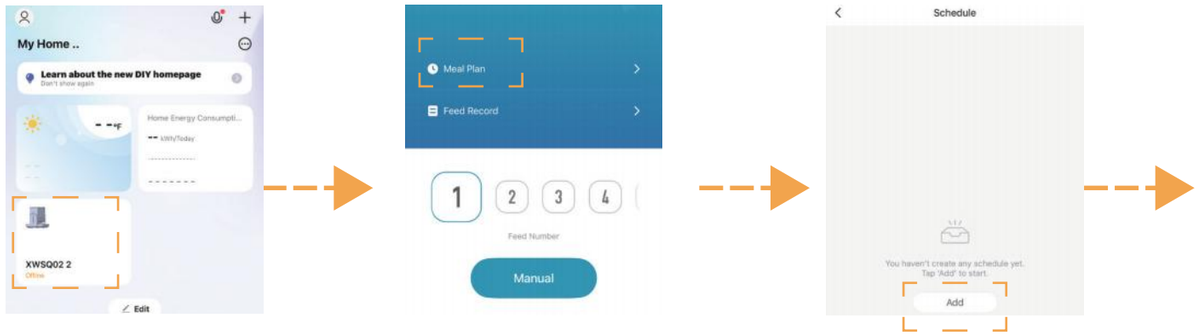

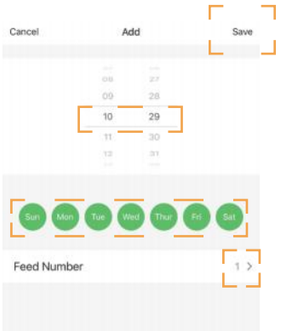

6. Manual Feeding

After adding the device, tap the device icon to enter the feeding settings screen.
Select the number of portions, then tap Manual to dispense food immediately.

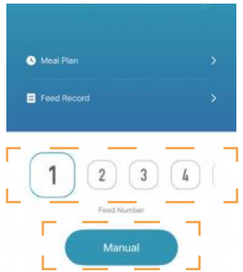

7. Other Function Settings and Monitoring

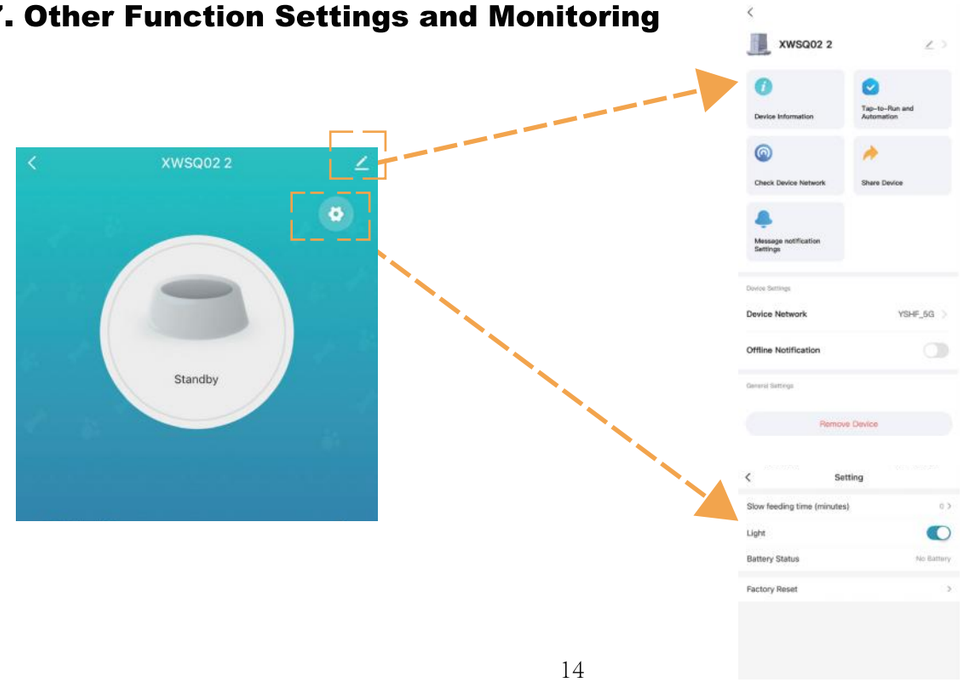

The Desired Amount of Kibbles

Note:

The amount of every portion is not adjustable. Pet owners should adjust the number of portions based on their pet's daily meals and appropriate amount per meal.

The size of the kibble we used in our lab: 0.3 inch. Here's the data from our experiment.

Cup	Portion	Gram	oz	ml
1/16	1	8	0.28	8
1/8	2	16	0.56	16
1/4	4	32	1.13	32
1/3	6	48	1.69	48
1/2	8	64	2.26	64
1	16	128	4.51	128

This data is for reference only. You need to test out the right amount for your pet, based on the dry food you used.

Tips:

1. The PORTION number shown on the display means the amount for each bowl.
2. It Does Not support to deliver different portions to each bowl.

Here are the steps:

1. In the following steps, let's assume that your two pets eat the same amount.
2. For example, ½ cup equals to 8 portions, so ¼ cup would equals to 4 portions.

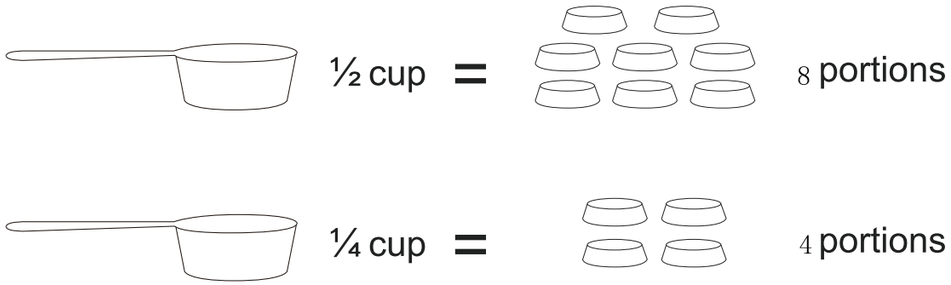

3. If you want a 1/4 cup amount, set the portion size to 4 servings.
4. Measure the delivered kibbles. If the kibbles are measured as the amount you need, it means this setting is OK.
5. Otherwise, adjust the portion number to let it get close to the desired amount.

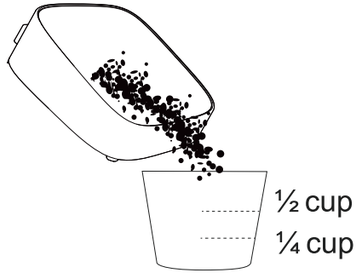

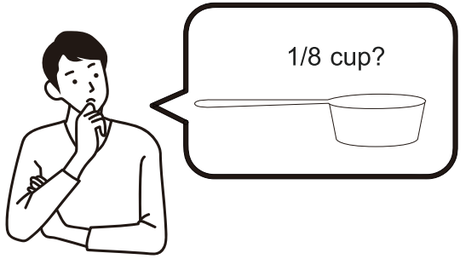

Cleaning and Maintenance

***Note:**

The following parts are washable (can be rinsed or soaked, but must be wiped dry with a clean cloth after washing).

All other components are wipe-clean only (surface cleaning only; do not rinse or soak).

Food Storage Container

Food Bowl Supports

Stainless Steel Food Bowls

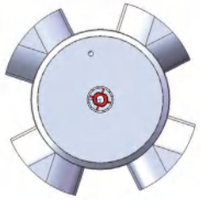

Food Dispensing Rotor

***Disassembly**

①Pull the handle on one side of the dispensing mechanism to remove the main unit (food container + dispensing mechanism) completely. Place it on a flat table or floor.Remove the control panel and open the upper lid (as shown below).

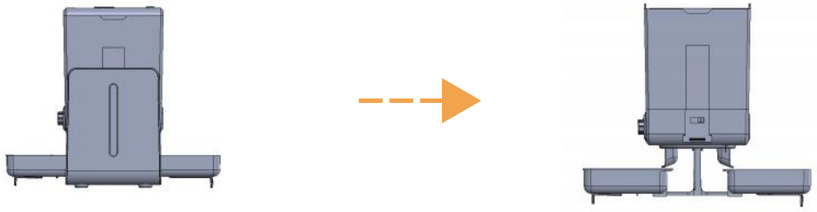

②Remove the food bowls, food bowl supports, and food bowl bracket by following the direction of the arrows shown in the diagram. If there is any remaining food in the container, turn the food storage container upside down to empty it (as shown below).

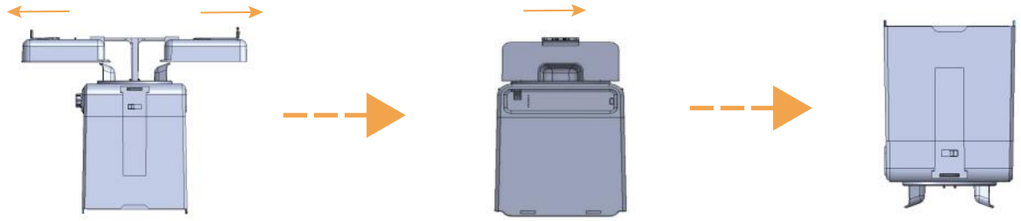

③Switch the lock between the food hopper and the dispensing mechanism to the unlocked position. Flip the main unit over, then rotate the fastening bolt inside the food hopper counterclockwise until fully loosened.Remove the food agitator blade, food storage bin, and portioning disc individually for cleaning (as shown below).

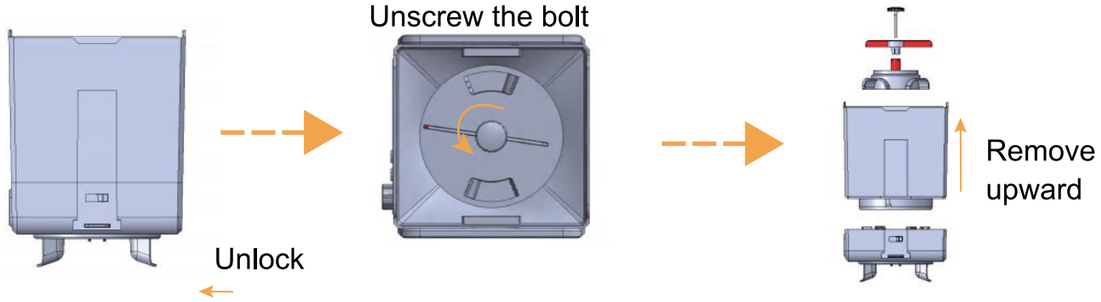

④After cleaning, wipe off any remaining water on the surface with a dry cloth. Reassemble all parts in their original positions. The device is now ready for use.

Important Notes

●Before disassembling and cleaning, make sure to turn off the machine and disconnect the power supply.

●Except for the food hopper, stainless steel food bowls, food bowl supports, and portioning disc, all other components must not be washed with water. Clean them only with a wrung-out cloth.

●Do not rinse the main unit.

●This product is not suitable for high-temperature cleaning.

●If the machine will not be used for an extended period, be sure to turn it off and disconnect the power supply.

Safety Precautions

***Failure to comply with the following precautions may result in product malfunction or pose safety risks.**

●Please install and use this product strictly in accordance with the instructions.

●Do not rinse the main unit directly with water to avoid short-circuiting or damaging the electronic components.

●Do not insert your hands into the food inlet or outlet to avoid getting pinched or injured.

●Do not hang heavy objects on the main unit, as it may cause damage, tipping, or accidents.

●It is not recommended for children to operate this machine. Do not allow children to treat it as a toy or sit on it.

●Only qualified maintenance personnel are allowed to repair this product. Unauthorized repairs may result in accidental injury.

●Do not place or use this product outdoors, in bathrooms, or in humid or extreme weather conditions such as rain or snow.

●If the product has been damaged due to drops or impact and cannot function properly, stop using it immediately. Do not attempt to force it to operate.

●Do not touch the power supply section of the product with wet hands.

●Keep the product away from open flames heat sources, or high-temperature environments.

●Please use a certified brand adapter. Ensure the voltage and current meet this product's requirements, and follow the adapter's usage instructions.

●If you encounter any other issues while using the product, please contact customer service promptly.

Simple Troubleshooting

1.Unable to connect to WiFi:
Please check if the USB cable and power adapter are properly connected and functioning, and whether the WiFi signal is weak.

2.Feeding action is shown but no food is dispensed, though the motor sounds like it's running:
The food might be stuck in the dispenser.
Solution: Turn off the power, pour out the remaining food, and gently tap the machine to see if the blockage clears.
If the problem persists, please contact customer service for assistance.

3.No food dispensed:
The machine has a built-in anti-jamming function.
This issue may be caused by setting too many meals or too many portions at once, which can clog the outlet.
It is recommended to reset to a more reasonable number of meals and portions.

Contact Us

WE ARE READY TO HELP

CityFlee offers a standard 1-year warranty. If you experience any issues with your product, please contact us through Amazon's messaging system, including your proof of purchase and any relevant photos or videos to help expedite the process. Our customer support team is available 7 days a week and will respond to your inquiry within 24 hours. Thank you for choosing CityFlee.

Please note that the warranty does not apply to used products or purchases made from unauthorized sellers. It also does not cover consumable parts such as desiccants, filters, and other similar items that require regular replacement or maintenance.

Scan to download instruction manuals in other language versions

die deutsche Version | la version française | 日本語版（にほんごばん） | la versión en español | la versione italiana | 한국어 버전 | 中文

This device complies with Part 15 of the FCC Rules. Operation is subject to the following two conditions: (1) this device may not cause harmful interference, and (2) this device must accept any interference received, including interference that may cause undesired operation

NOTE: This equipment has been tested and found to comply with the limits for a Class B digital device, pursuant to Part 15 of the FCC Rules. These limits are designed to provide reasonable protection against harmful interference in a residential installation. This equipment generates, uses and can radiate radio frequency energy and, if not installed and used in accordance with the instructions, may cause harmful interference to radio communications. However, there is no guarantee that interference will not occur in a particular installation.

If this equipment does cause harmful interference to radio or television reception, which can be determined by turning the equipment off and on, the user is encouraged to try to correct the interference by one or more of the following measures:

-- Reorient or relocate the receiving antenna.

-- Increase the separation between the equipment and receiver.

-- Connect the equipment into an outlet on a circuit different from that to which the receiver is connected.

-- Consult the dealer or an experienced radio/TV technician for help.

Warning: changes or modifications not expressly approved by the party responsible for compliance could void the user's authority to operate the equipment

The devices has been evaluated to meet general RF exposure requirement， the device can be used in portable exposure condition without restriction

Manufacturer: Shenzhen Xinlin Yuding Technology Co., Ltd

Manufacturer's Address: Street, Baoan District, Shenzhen Building 11, Zone A, First Industrial Zone, Gonghe Community, Shajing

MADE IN CHINA