INFRARED HEATER

OPERATING INSTRUCTIONS

US-BR-IR1200, US-BR-IR1000, US-BR-IR800, US-BR-IR600, US-BR-IR450, US-BR-IR300
US-BR-IR1200B, US-BR-IR1000B, US-BR-IR800B, US-BR-IR600B, US-BR-IR450B, US-BR-IR300B

RoHS CE

REGULATORY INFORMATION

FCC Compliance Statement

This device complies with Part 15 of the FCC Rules. Operation is subject to the following two conditions:
(1) This device may not cause harmful interference, and
(2) this device must accept any interference received, including interference that may cause undesired operation.
Note:
This equipment has been tested and found to comply with the limits for a Class B digital device, pursuant to Part 15 of the FCC Rules
These limits are designed to provide reasonable protection against harmful interference in a residential installation.
This equipment generates, uses, and can radiate radio frequency energy, and if not installed and used in accordance with the instructions, may cause harmful interference to radio communications.
However, there is no guarantee that interference will not occur in a particular installation.
If this equipment does cause harmful interference to radio or television reception, which can be determined by turning the equipment off and on, the user is encouraged to try to correct the interference by one or more of the following measures:
– Reorient or relocate the receiving antenna.
– Increase the separation between the equipment and receiver.
– Connect the equipment into an outlet on a circuit different from that to which the receiver is connected.
– Consult the dealer or an experienced radio/TV technician for help.
Changes or modifications not expressly approved by the party responsible for compliance could void the user's authority to operate this equipment.
Radiation Exposure Statement
This device complies with FCC RF radiation exposure limits set forth for an uncontrolled environment.
The FCC certification of this device refers to RF exposure testing performed under typical operating conditions, where a person is no closer than 20 centimeters (8 inches) from the device surface at all times, except for non-repetitive patterns with transient time intervals on the order of one second.
Only under these stated conditions has the device been shown to fully comply with the FCC RF Exposure requirements of KDB 447498.

FCC ID: 2BQOG-US-BR-IR

READ INSTRUCTIONS CAREFULLY

Read and follow all instructions. the instructions in a safe place for future reference. Do not allow anyone who has not read these instructions to assemble, start, adjust or operate the heater.

WARNING: To avoid overheating, the appliance must not be covered.

CAUTION: Some parts of this product can become very hot and cause burns.

Special care must be taken when children and vulnerable persons present.

IMPORTANT NOTES

PLEASE READ AND RETAIN THESE IMPORTANT SAFETY INSTRUCTIONS

When using electrical appliances, basic precautions should always be followed to reduce the risk of fire, electric shock and injury, including the following:

1. Read all instructions before using this heater.

2. Extreme caution: This appliance is not intended for use by persons (including children) with reduced physical, sensory or mental capabilities, or lack of experience and knowledge, unless they have been given supervision or instruction concerning use of the appliance by a person responsible for their safety. Children should be supervised to ensure that they do not play with the appliance.

3. This heater is hot when it in operation. To avoid burns, make sure that your bare skin does not come into contact with hot surfaces. Keep flammable materials such as furniture, cushions, bedding, papers, clothing and curtains at least 0.9 m away from the front of the heater and keep them away from the sides and back.

4. Always remove the plug from the socket when the appliance is not in use.

5. Do not operate the heater with a damaged cord or plug or if the heater has malfunctioned, been dropped or damaged in any way. Take the appliance to an authorized service centre for inspection, electrical or mechanical adjustment or repair.

IMPORTANT NOTES

6. For indoor use only.

7. This heater is not intended for use in bathrooms, washrooms and similar indoor areas. Never place the heater in such a way that it could fall into a bathtub or other water container.

8. Do not lay the cable under fabrics. Do not cover the cable with carpets, rugs or similar coverings.

9. To prevent a possible fire, the space between the heater and the wall intended for the air supply or exhaust must not be blocked in any way.

10. A heater has hot and arcing or sparking parts inside. Do not use it in areas where petrol, paint or flammable liquids are used or stored.

11. Only use the heater as described in this manual. Any other use not recommended by the manufacturer may result in fire, electric shock or injury to persons.

12. Avoid using an extension cable, as the extension cable can overheat and pose a fire hazard. If you still have to use an extension cable, the power of the cable must not be less than 800 watts (at 110-120 V).

13. To avoid overloading a circuit, do not connect the heater to a circuit in which other devices are already in operation. Do not install the heater under the wall socket.

14. It is normal for the plug to feel warm to the touch; however, a loose fit between the outlet and plug can cause the plug to overheat and become deformed. Contact a qualified electrician to replace a loose or worn socket.

IMPORTANT NOTES

15. The output of this heater may vary and the temperature may become high enough to cause burns to the skin. The use of this heater is not recommended for persons with reduced sensitivity to heat or the inability to react to avoid burns.

16. This appliance can be used by children aged from 8 years and above and persons with reduced physical, sensory or mental capabilities or lack of experience and knowledge if they have been given supervision or instruction concerning use of the appliance in a safe way and understand the hazards involved. Children must not play with the appliance. Cleaning and maintenance by the user must not be carried out by children without supervision.

17. Children under the age of 3 should be kept away if they are not supervised at all times.

18. Children aged 3 and under 8 years may only switch the appliance on and off if it has been set up or installed in the intended normal operating position and they have been supervised or instructed in the safe use of the appliance and understand the dangers. Children aged 3 to under 8 years must not plug in, adjust or clean the appliance or out maintenance work.

19. If the mains cable is damaged, it must be replaced by the manufacturer, its customer service department or similarly qualified persons in order to avoid a hazard.

WALL MOUNTING INSTRUCTIONS

Unpack your package and find the heater together with the accessories for wall mounting.

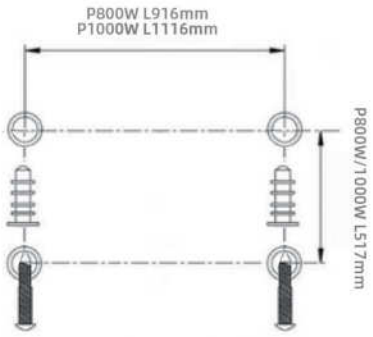

Schritt 1: Mark the positions of the 4 drill holes on the wall.

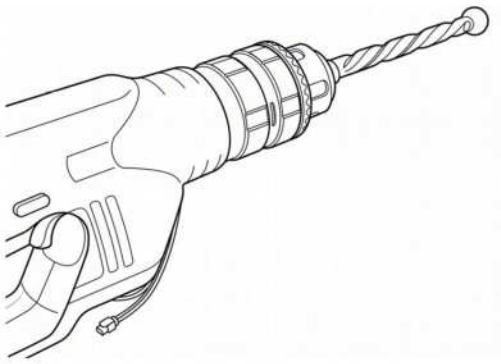

Schritt 2: Drill 4 holes with a diameter of 8 mm and a depth of 60 mm using a drill machine.

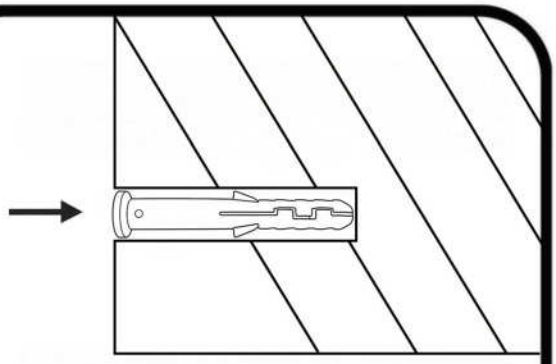

Schritt 3: Insert the plastic guides into the slots.

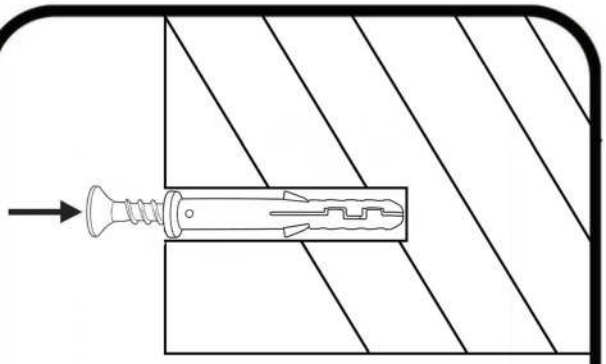

Schritt 4: Turn the 4 metal screws for wall mounting into the plastic anchors.

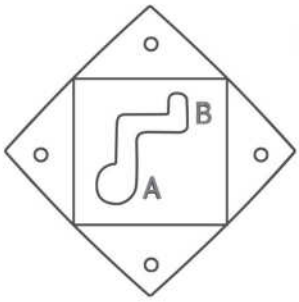

Step 5: Lift the heater, align the three round holes on the brackets on the back of the heater with the three screws on the wall and slide the screw from position A to position B by moving the heater slightly.

FREESTANDING INSTRUCTIONS

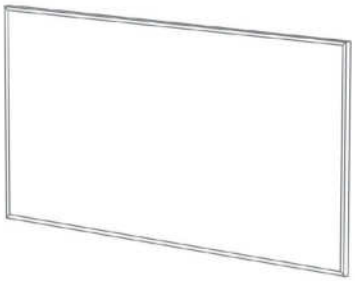

Place the feet on the floor, align the holes on the feet with the holes on the underside of the heater and screw the 2 x bolts into the holes.

Control panel

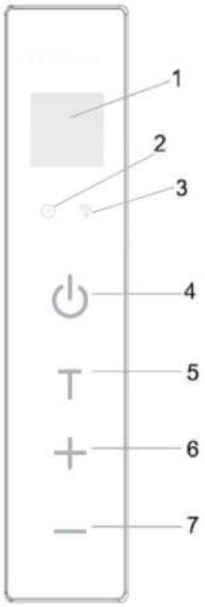

1. LED display
2. Timer indicator light
3. WIFI indicator light
4. ON/OFF button
5. Timer button
6. Increase temperature and timer
7. Reduce temperature and timer

Remote control

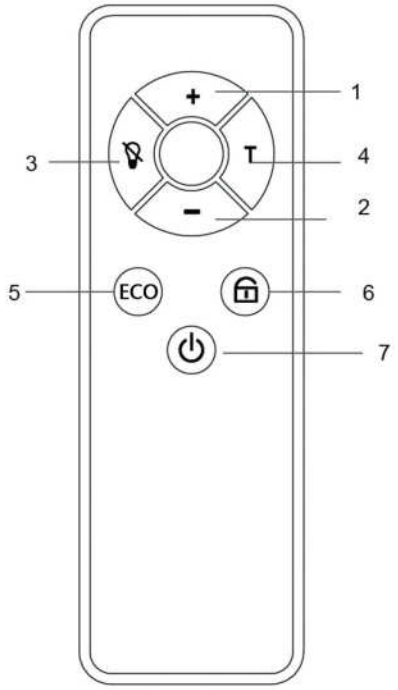

1. Increase temperature and timer
2. Reduce temperature and timer
3. Screen off
4. Timer
5. ECO Mode
6. Childproof lock
7. ON/OFF

NOTE: Before using the remote control, make sure that 2 AAA batteries (not included) are inserted correctly.

OPERATING INSTRUCTIONS

1. Check the heater for damage before use.

2. Insert the plug into the socket, you will hear a beep, the screen lights for 1.5 seconds, then "--" appears, the WIFI light flashes and the heater is in standby mode.

3. Press the "⏻ " button and the display will show the preset temperature 25℃ . The heating starts working when the room temperature is 1 degree below the set temperature, or stops working when the room temperature is 1 degree below the set temperature.
work when the room temperature reaches the set temperature.

4. Press the "+ or -" button on the control panel or remote control to change the temperature setting. The set temperature flashes on the display for 5 seconds. Each press increases (+) or decreases (-) the temperature by one degree. The temperature setting range is 41-131°F

5. Press the "T" button on the control panel or remote control once, the LED display flashes, press "+ or -" to set the timer for 0-24 hours. The countdown timer is set after 5 seconds of flashing. The LED display alternates between the timer and the set temperature.

6. Press and hold the " - " button on the control panel to switch on the childproofing function and display "LC" on the screen; press and hold the "-" button to switch off the childproofing function.

7. When the device is switched on, the display switches off if you do not make any changes to the settings for more than 1 minute. You can reactivate it by pressing any button once.

Connecting with WiFi

1 - To connect your heater to the Wi-Fi, you must first download the TUYA Smart app to your smartphone. You can find the app by scanning the QR code on the right or searching for "TUYA Smart" in the Google Play or Apple Appstore.

2 - Download and install the app. If you do not already have a Smart Life account, you must create an account by tapping Register.

3 - The device automatically determines your country, but you can change this if necessary. Enter your phone number or e-mail address. If you a phone number, a verification number will be sent to your phone: Enter this number for verification and then create a password. If you enter your e-mail address, you only need to create a password.

4 - To add your heater to the app, first switch it to WiFi connection mode.
Insert the plug into the socket, you will hear a beep, the full screen lights for 1.5 seconds, then "--" is displayed, the WIFI light flashes and the heater is in standby mode;
You can establish a Wi-Fi connection and add the device in the TUYA APP with your smartphone. If the WiFi symbol is not flashing, press and hold the "T" button.

5 - As soon as the symbol flashes, go to the app and press "Add device". Find the device and press "Add". Enter the wi-fi information, select wi-fi and enter the password (your wi-fi password), press "Next" and after successful addition press "Done".

6 - The app will then display the connection screen and a solid Wi-Fi symbol on the LED display when the device is connected.

7 - The app confirms that the heater has been added. You can now give the device a name. Select "..." at the top right of the control screen and then Change device name to give your heater a logical name so that you know which device it
.

8 - If your other device or family members want to establish a WIFI connection, press and hold "T" to deactivate the WIFI connection from your current device first.

Use of the SmartLife /Tuya app.

Use of Wi-Fi and app to control the heating.

1- Switch: Switches the heating on/off;

2- Countdown: Set a timer from 0-24 hours to switch the heater on and off; when the heater is in operation, the countdown switches the heater off; when the heater is switched off, the countdown switches the heater on.

3- ECO mode: When you switch on this mode, "EC" is shown on the heater display. If you open the window and the room temperature drops by more than 5 degrees within 10 minutes, the appliance automatically switches off the heating to save energy.

4 - Child lock: If you activate this function, "LC" is shown on the heating display, operation via the control panel and the remote control is not possible, only operation via the APP with the smartphone is possible.

5- Light: switches the display on the screen on/off

6 - Timer (7*24 hour heating schedule): You can set the time, day, temperature and switch the heating on and off. Select whether the process should be repeated. Select "Once" if you only want to set a timer for now. If you want to repeat the event, select the days on which it should take place. Then select whether the heating should be switched on or off. Finally, select the temperature at which the heating should be switched on. Confirm your settings in each phase and press Save to save the event. Each event is displayed in your schedule.
You can activate and deactivate events using the toggle switch. You can also delete events by swiping to the left and tapping Delete.

Use of the SmartLife /Tuya app.

Use of Wi-Fi and app to control the heating.

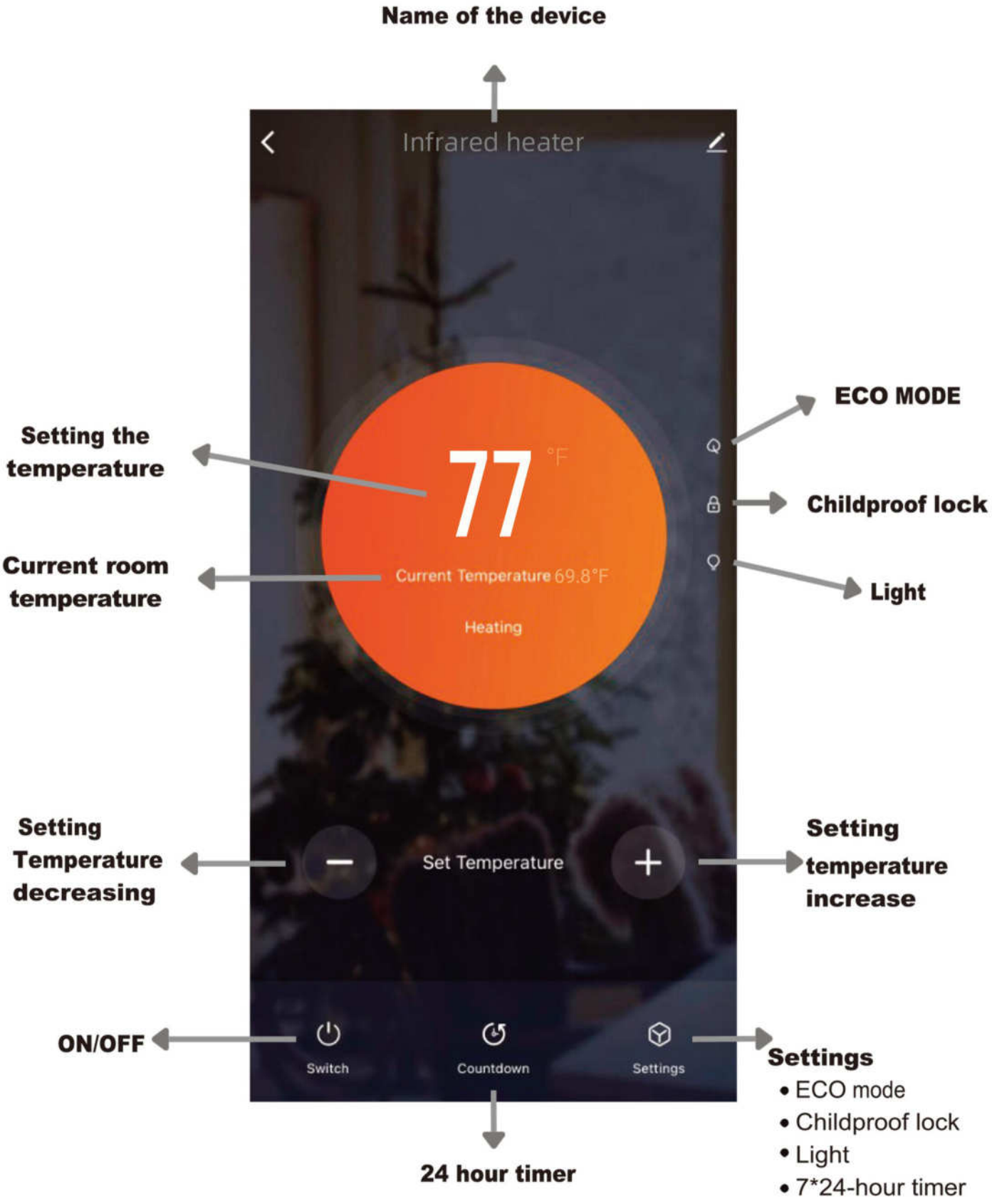

CLEANING AND STORAGE

Before cleaning your heater, switch it off and allow it to cool down. Disconnect the power supply to the appliance. The outside can be cleaned by wiping with a soft, damp cloth and then drying. Do not use abrasive cleaning agents or furniture polish, as these can damage the surface. To detach the radiator from the wall for cleaning or renovation, simply open the screw cap and unscrew the bolts to remove it from the wall.

For short-term storage, simply unplug the plug and leave it out; for long-term storage, you can remove it from the wall or cover it with a material.

CLEANING AND STORAGE

Model number: US-BR-IR1200, US-BR-IR1000, US-BR-IR800, US-BR-IR600, US-BR-IR450, US-BR-IR300
US-BR-IR1200B, US-BR-IR1000B, US-BR-IR800B, US-BR-IR600B, US-BR-IR450B, US-BR-IR300B
110-120V 50Hz,1200W

Proper Disposal of This Product

This marking indicates that this product must not be disposed of with other household waste throughout the EU. To prevent possible harm to the environment or human health from uncontrolled waste disposal, please recycle it responsibly to promote the sustainable reuse of material resources. To return your old device, please use the return and collection systems or contact the retailer where you purchased the product. They can ensure environmentally friendly recycling.

BRINGER®

SC Trade & Services USA Corp.
444 Brickell Ave, Ste 700
Miami, FL 33131
info@bringer-germany.de • www.bringer-germany.de