SHENZHEN TOPFUN ELECTRONIC CO.,LTD
WWW.SZTOPFUN.COM
Service Call from Monday to Friday--- 9:00AM---18:00PM
Tel: +86 755 8427 9923
E-mail: Sales@sztopfun.com

Remote Beeper Trainer Manual

Model: CleverDog PT-288 T&B Hunting Pro

TROUBLESHOOTING GUID

Problem#1. No stimulation when a transmitter button is pressed.
The receiver has not been activated. The receiver must be turned on or it won't work at all.
The receiver has not been set to your transmitter. Follow the instruction
" Adding a Receiver".
The batteries in either the receiver or the transmitter are dead. Recharge or replace, as needed.
You are using the wrong transmitter. Check the transmitter.

Problem#2: The Beeper doesn't make any sound when the power switch is turned on.
The battery in the Beeper has run down. Recharge as needed.
Check battery on the receiver collar as well.

Problem#3: The stimulation seems to high, not high or not feeling at all.
The collar strap is not tight enough. Make sure the contacts points connect the dog's skin well.
The intensity level is not correct. Change the shock level.
The batteries are dead. Replace or recharge as needed.

Problem#4: The receiver light changes color to indicate low charge very quickly.
The unit has been left turned on between training session. Make sure the receiver is turned off after use.
You are training in very cold weather.

Problem#5: The receiver deactivates itself while training.
The batteries have run down. Make sure the batteries are well charged.

Problem#6: The Remote trainer doesn't have range or range is significantly reduced.
Either you or the dog is shielded by a metal structure. Operate it far away from these structure.
The receiver is on backwards. For best range, position the receiver so that the light face toward the dog's nose.
Radio Interference. Wait a short while then try again, or move to another area.

Problem#7: The receiver seems can't receive any signal or can not work at all.
Check the receiver on/off button, make sure the receiver is turned on.
Check the transmitter battery, try it once again.
Check if you use the correct transmitter and receiver, they are matched previously in the factory.
Charge the transmitter and receiver if needed.

Problem#8: The charger becomes warm during charging.
This is not a malfunction. Heat build-up is normal. Don't charge in extreamly warm area such as a closed vehicle in the sun and be sure the vents are not blocked.

PT-288 Pro Hunting Remote Beeper Trainer Instruction

Contents:

1.Transmitter (built-in Li-ion rechargeable battery)
2.Receiver Beeper Collar (built-in rechargeable battery)
3.Charger set
4.PVC Strap
5.Magnetic Key
6.Lanyard
7.Test Ne Light
8.USB cable
9.Manual

Main Features:

1.Long range up to 1600 meters on open area.
2.Expandable 3 dogs with the same transmitter (buy extra collars separately)
3."Buzz(Locate)" Hawk scream sound activated with a separate button
4.12 Levels momentary stimulation
5.12 Levels continuous stimulation
6.The transmitter can directly activate and control the beeper sound
7.Three beeper modes 'Point Only', 'Run&Point', 'Locate'
8.LED night light to help you find your dog even in darkness
9.LCD displays the exact the stimulation levels and Dog ID with blue backlight.
10.Beeper sound (Hawk scream) can be heard around 400 meters.
11.Memory function of stimulation levels in transmitter
12.Waterproof beeper collar and water resistant transmitter
13.3 bars battery capacity indication on transmitter
14.Rechargeable Li-ion batteries for both transmitter and receiver collar
15.LED low battery voltage indication on Receiver Collar
16.2 hour rapid charge
17.Fully functional multi-dog system
18.2-year warranty

PT-288 Transmitter

SETTING UP A MULTI-DOG SYSTEM

You can expand your one-dog Remote Trainer into a multi-dog Remote Trainer by yourself.
Simply purchase additional PT-288 receivers and add them to your system.
You can have a multi-dog Remote Trainer when you need one without placing
a special order and the delay of having something built for your system at the facto

Adding a Receiver.

To add an additional receiver to your PT-288 system, follow these steps:
NOTE: we'll send you additional colored straps with your order if you want to set up
2 or 3 dogs system.
1.Switch on the Receiver. Then you can see the green LED light flashes 2 time per second.
2.If you want to add(match)B dog you must press and hold“ ”button to make sure the
LCD display“B00” or
Then you press the “ ” or “ ”buttons,you ll hear BB sound from the rceiver,and LED will
flash 1time per 4second.Then release the buttons.
It means matching is successful. And you successfully add one B dog in your system.
For C dog, do the same.

NOTE:

Please switch off ofher receivers during you add new collar to your system.

FITTING THE COLLAR ON THE DOG

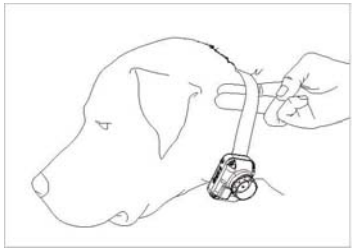

PROPER FIT

The collar should be fitted so that the surgical contact points press firmly against the dog’s skin. You should be able to fit a finger in between the contact point and your dog’s skin. The best location is either side of the dog’s windpipe.

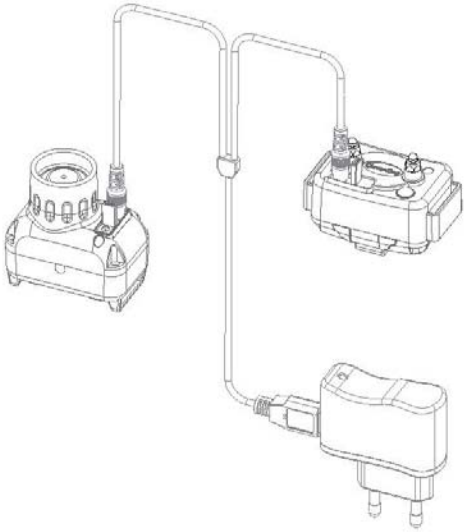

The battery charger and charging cables allow you to charge both the transmitter and receiver at the same time. The battery charger is designed for a 120-volt wall outlet. (European 230-volt AC chargers and 12-volt car charger for Lithium-Polymer batteries are also available.)

Recharge the unit if :

The LED indicator light on the collar receiver is emitting a red color.

If the 3 bar indicator on the transmitter LCD shows just 1 bar.

The indicator light on the transmitter or receiver will not come on.

The indicator light on the transmitter or receiver comes on momentarily, but will not stay on when the "Constant" button is pushed.

BUTTON FUNCTION

"+" and "- "buttons: Press the buttons to adjust the shock intensity from 1 to 12 levels
"Button The "Locate" button causes the collar's beeper horn to emit a series of beeps when pushed and it gives you the ability to keep track of your dog's location.
" " button: Vibration or momentary stimulation. (Optional)
" " button: Continuous stimulation. (Max time 8 seconds and automatically stop shock)
" " button: The LED Night Light will help you find the dog in the darkness with 2 modes. Press the button and then quickly release it, the LED Night Light will always ON. Press the button and hold the button more than 2 seconds, the LED Night Light will flash every 2 seconds. To Off the LED Night Light, just press the button again and release it quickly.
" " button: Press the button to select one of A, B, C dogs you want to train.
"⏻"Button: (It is both the ON/OFF power switch button and MODE button. For ON/OFF POWER button, you need to press and hold it more than 2 seconds to ON or OFF the unit; For MODE button, you press the button and then must QUICKLY release to select one of modes. Refer to the "MODE".)
"MODE" button: Your CleverDog PT-288 Pro Hunting has three different modes. Locate, Run/Point, and Point-Only. The "LOCATE" mode can be activated at any time, even when another mode is set, by pressing the button labeled " " on the transmitter. To set the beeper unit to Run/Point mode, press the "MODE" button. This button is located on the left side of the transmitter labeled " ⏻ " button
When you press the "MODE" button the first time, the collar will beep once, remain silent while the dog is running and beep every 2 seconds when the dog is on point or stationary.
The second time you push the "MODE" button, it will beep twice. The beeper unit will always start in Run/Point mode. It is now in Run/Point mode. The beeper will sound every 8 seconds while the dog is running, and every 2 seconds when the dog is gone on point or become stationary.
To turn the beeper unit off, press the MODE button a third time. The unit will emit three rapid beeps, and the beeper will turn off. The Locate mode can still be used!
NOTE: **The ON/OFF power switch on the left side of the transmitter is also the MODE button.**
Press the MODE button and **QUICKLY** release to select the one of the modes.

	Initial Beeper Sound	Mode	Action
Press 1st Time	1 Beep	Point-Only Mode	-Dog running: Remain Silent -Dog on-point: Beep every 2 seconds.
Press 2nd Time	2 Beeps	Run-Point Mode	-Dog running : beep every 8 seconds -Dog on-point: Beep every 2 seconds.
Press 3rd Time	3 Beeps	Beeper	Unit Turned off

The Receiver is waterproof.

NOTE: FULL CHARGE RECEIVER BEFORE FIRST USE.

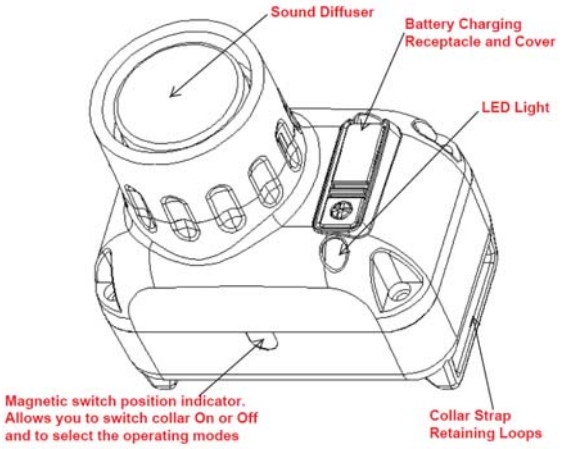

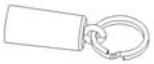

Magnetic Key

Note: (1) Sometimes you need to move the magnetic key slowly up and down, or left and right near the field of the magnetic switch position indicator (mark) to switch on or off the beeper collar until you hear the B-B sound from the beeper collar. Please keep patience. (2) The LED is red when charging, but it becomes green when fully charged around in 2 hours.

Switch ON or OFF the Receiver Beeper

1.Switch on the Beeper collar

Before using the collar, be sure you properly tighten the 4 screws in the top in order to maintain the watertightness of your product.

To switch On your beeper collar touch the magnetic switch position indicator with the magnetic key for at least one second until you hear B-B sound. Then move the magnetic key away. There is a mark on plastic case to indicate the magnetic switch position.
The collar will emit two low pitch beep sounds and the green indicator light will flash briefly indicating the beeper collar is ON. Move the magnetic key away.

2.Switch off the collar

To switch Off your beeper collar touch the magnetic switch position indicator with the magnetic key for at least one second. There is a mark on plastic case to indicate the magnetic switch position.

The collar will emit one low pitch beep sounds and the green indicator light will disappear indicating the beeper collar is Off. Move the magnetic key away.

Charging System

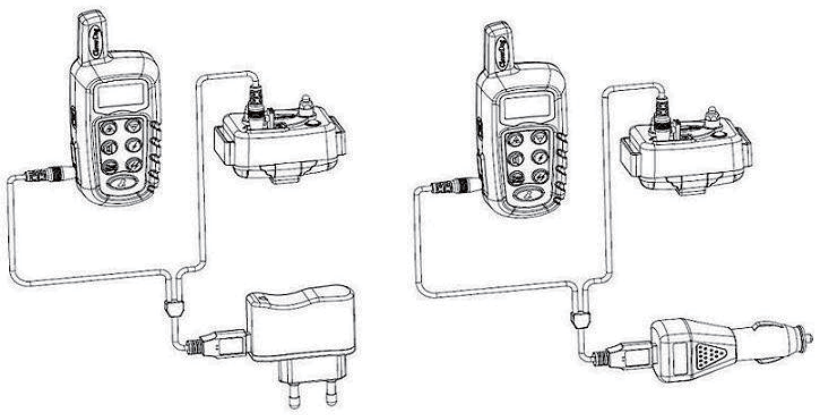

(option)

FCC Warnning:

This equipment has been tested and found to comply with the limits for a Class B digital device, pursuant to part 15 of the FCC Rules. These limits are designed to provide reasonable protection againstharmful interference in a residential installation. This equipment generates, uses and can radiateradio frequency energy and, if not installed and used in accordance with the instructions, maycause harmful interference to radio communications. However, there is no guarantee thatinterference will not occur in a particular installation. If this equipment does cause harmfulinterference to radio or television reception, which can be determined by turning the equipmentoff and on, the user is encouraged to try to correct the interference by one or more of thefollowing measures:

- Reorient or relocate the receiving antenna.
- Increase the separation between the equipment and receiver.
- Connect the equipment into an outlet on a circuit different from that to which the receiver is connected.
- Consult the dealer or an experienced radio/TV technician for help.

Caution: Any changes or modifications to this device not explicitly approved by manufacturer could void your authority to operate this equipment.

This device complies with part 15 of the FCC Rules. Operation is subject to the following two conditions:

(1)This device may not cause harmful interference, and (2) this device must accept any interference received, including interference that may cause undesired operation.

This equipment complies with FCC radiation exposure limits set forth for an uncontrolled environment. This equipment should be installed and operated with minimum distance 0cm between the radiator and your body.