K02 Transparent Speaker Product Manual

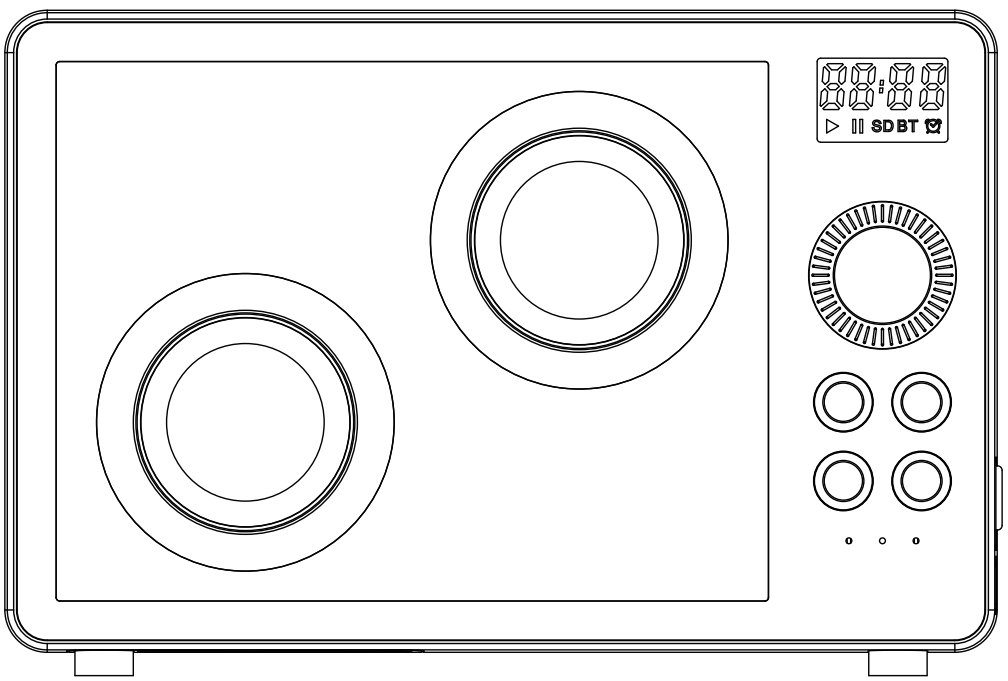

Please read this manual carefully before using the product
Please keep this manual for future reference

Exterior Description

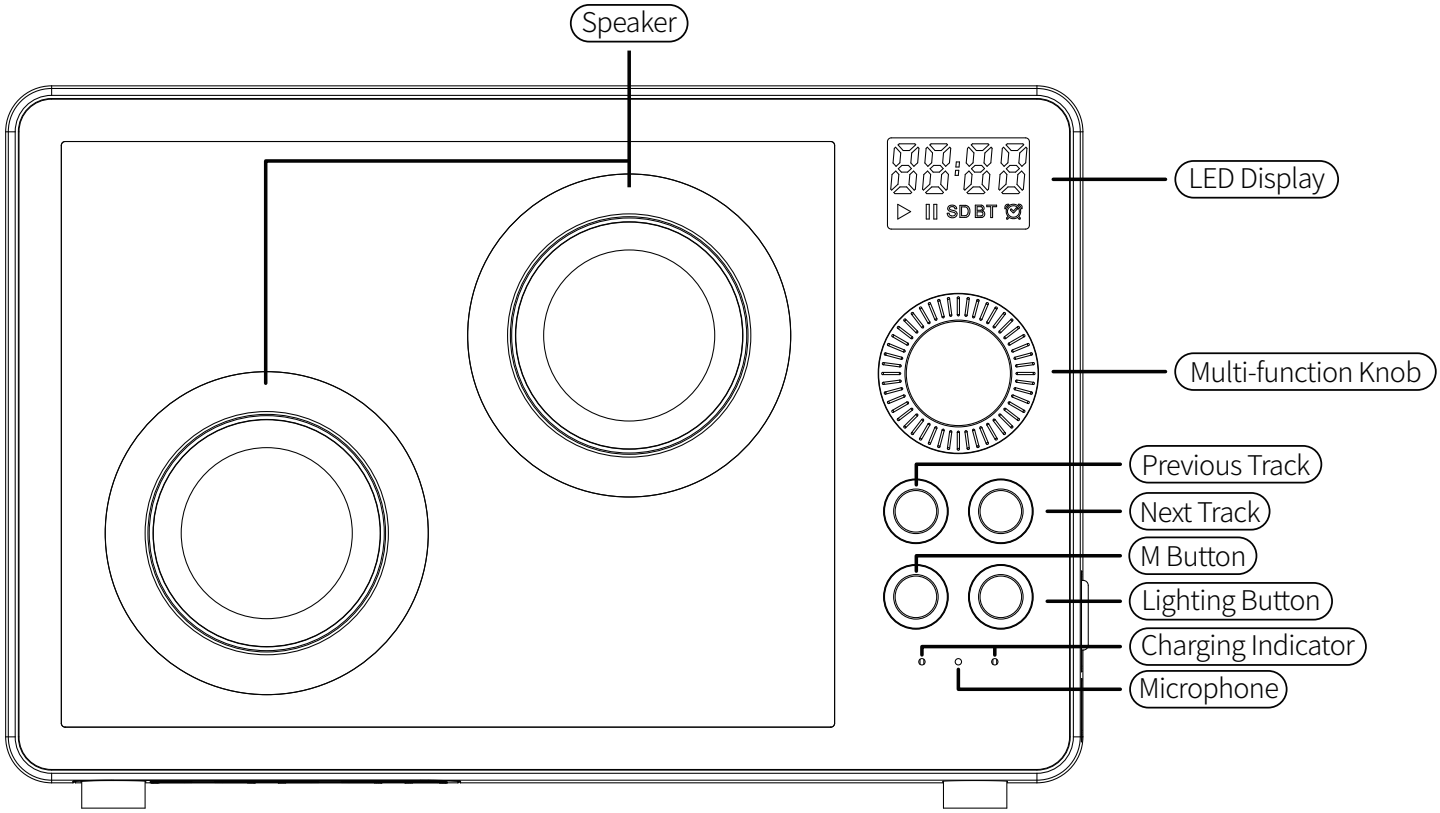

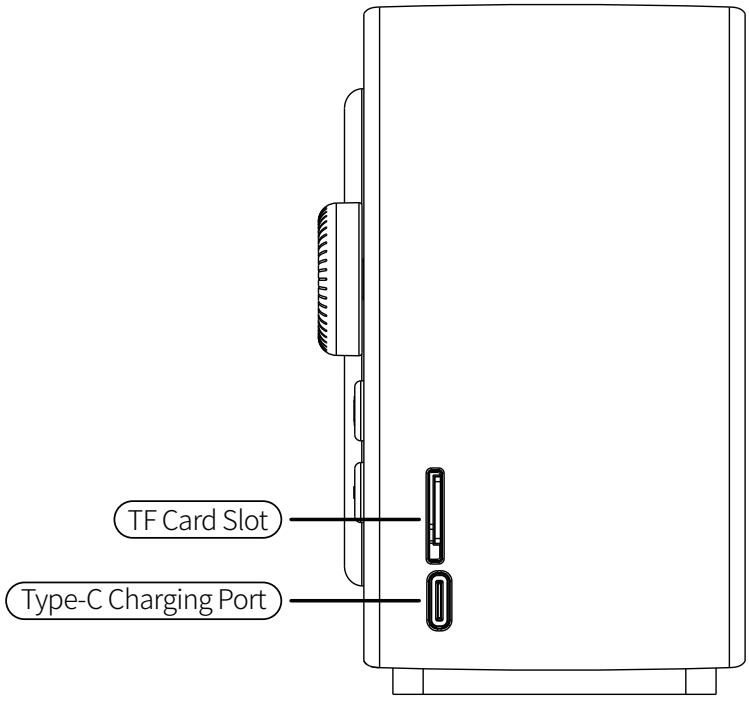

Product Usage

Multi-function Knob： Press and hold for 2 seconds to power on/off; short press to play/pause; rotate to adjust volume.
Previous/Next Track： Short press to switch songs.
M Button： Short press to switch between SD card mode and BT mode. Press and hold to enter alarm setting mode.
Lighting Button： Short press to cycle through lighting effects. Press and hold to turn lights off/on.
Display Description： The top shows the clock, which syncs with your phone when Bluetooth is connected. The bottom displays (in order): Play/Pause, SD Card Mode, BT Bluetooth Mode, Alarm.When the alarm icon is lit, it indicates an active alarm setting.
Bluetooth Connection： When powered on without an SD card, the speaker defaults to BT mode ("K02" will be discoverable on your phone). If a TF card is inserted, manually press the M button to switch to BT mode.
Bluetooth Calls： During an incoming call, short-press the knob to answer/end, or long-press to reject.
Alarm Setup： Long-press M to enter alarm mode (icon blinks). Rotate the knob to set hours → short-press → set minutes → short-press again. Hours/minutes blink 3 times to confirm before exiting.
When alarm sounds: Press any button to snooze (repeats after 5 mins). Double-click the alarm button to disable for the day. To delete alarm, re-enter alarm mode and long-press the alarm button.

Charging： Use a 5V charger/USB port. Red indicator = charging; green = fully charged.

Product Specifications

Product Name	K02 Transparent Speaker
Dimensions	170*63*110mm
Material	Plastic + Acrylic
Rated Power	2*3W
Charging Input	5V⎓1A
Charging Time	2-3 hours

Precautions

1.This product is not waterproof. Do not place it in wet environments.
2.Avoid exposing the speaker to high temperatures, high humidity direct sunlight, or rain, as this may severely reduce its lifespan or cause malfunctions.
3.Do not disassemble, repair, or modify this product by yourself.
4.If not using the product for extended periods, charge it every 2 months to prevent excessive battery drain.

FCC Warnning:

This equipment has been tested and found to comply with the limits for a Class B digital device, pursuant to part 15 of the FCC Rules. These limits are designed to provide reasonable protection againstharmful interference in a residential installation. This equipment generates, uses and can radiateradio frequency energy and, if not installed and used in accordance with the instructions, maycause harmful interference to radio communications. However, there is no guarantee thatinterference will not occur in a particular installation. If this equipment does cause harmfulinterference to radio or television reception, which can be determined by turning the equipmentoff and on, the user is encouraged to try to correct the interference by one or more of thefollowing measures:

- Reorient or relocate the receiving antenna.
- Increase the separation between the equipment and receiver.
- Connect the equipment into an outlet on a circuit different from that to which the receiver is connected.
- Consult the dealer or an experienced radio/TV technician for help.

Caution: Any changes or modifications to this device not explicitly approved by manufacturer could void your authority to operate this equipment.

This device complies with part 15 of the FCC Rules. Operation is subject to the following two conditions:

(1)This device may not cause harmful interference, and (2) this device must accept any interference received, including interference that may cause undesired operation.

This equipment complies with FCC radiation exposure limits set forth for an uncontrolled environment. This equipment should be installed and operated with minimum distance 0cm between the radiator and your body.