PACEROCKER
New Model Auto Incline Treadmill
with Bluetooth Speaker

Fuel Your Passion
Ignite Your Fitness

User Manual

Auto Incline Walking Pad Treadmill

CONTENT

Package List ····· 02
Product Structure ····· 03
Product Specifications ····· 03
Introduction To Display ····· 04
Remote Control Instructions ····· 07
Operation Mode ····· 09
Running Belt Adjustment ····· 11
Oil Belt Lubricant ····· 12
Bule-tooth Speaker Connection ····· 14
Trouble Shooting ····· 15
Safety Information ····· 16
Warranty Statemen ····· 18
FCC Warning ····· 19

Package List

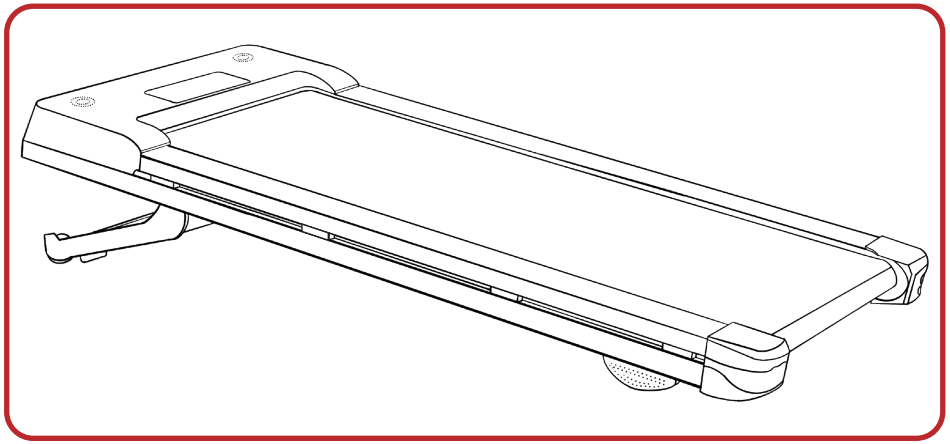

Treadmill

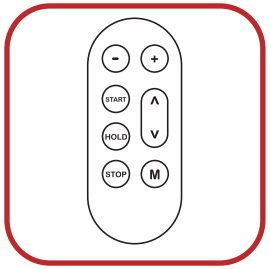

Remote Controller
x 2

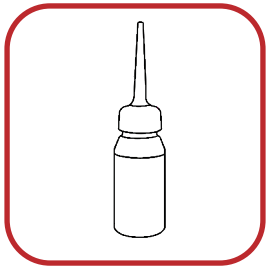

Oil Belt Lubricant
x 1

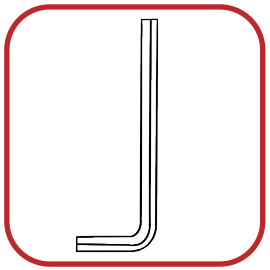

L-Shaped Wrench
x 1

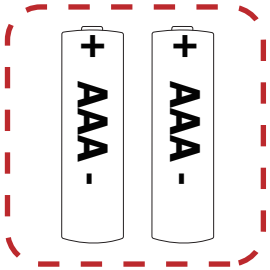

Triple-A
x 2
(No battery included for shipping safty, please prepare it first !)

Product Structure

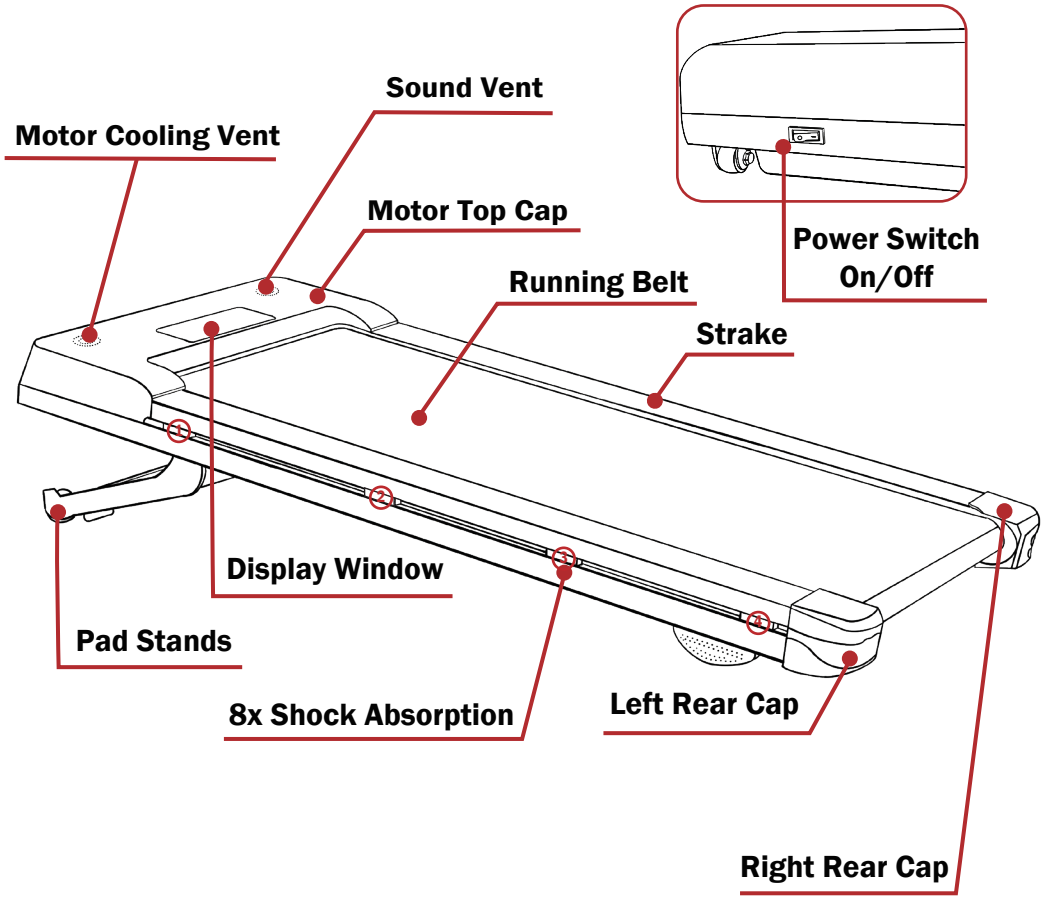

Product Specifications

Product Configuration	Technical Parameters
Speed Range	0-5.0 mph
Maximum Load Bearing	450 lbs
Maximum Horsepower	2.5 hp
Incline	12% 9-level positions

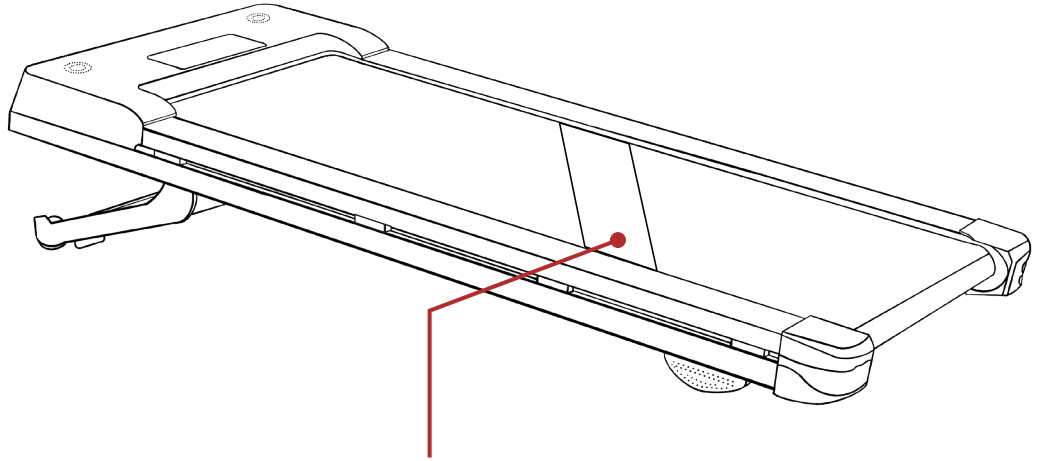

About the Treadmill Belt Seam

You may notice a visible mark or textured line on the treadmill belt. This is not a defect — it's a normal result of the heat-welding process used during manufacturing.

To create a continuous, durable belt, two ends are joined together using high-frequency heat welding technology. This method fuses the materials into a strong seam that matches the strength and performance of the rest of the belt.

Important Notes:

- The visible mark at the seam is purely cosmetic.
- It does not affect how flat, smooth, or stable the belt runs.
- The belt's performance, safety, and durability are fully maintained.

You can use your treadmill with confidence, knowing that this is part of the normal manufacturing process and does not impact function or lifespan in any way.

Introduction To Display

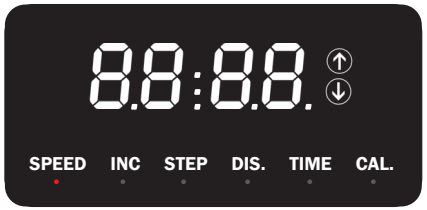

1.SPEED (SPEED Display)

The "SPEED" window displays the current speed, ranging from 0.6 to 5.0 mph. The user can adjust the speed in manual mode or after setting it in "M" mode (countdown setting for speed). Each press of the "+" or "-" button adjusts the speed by 0.2 mph.

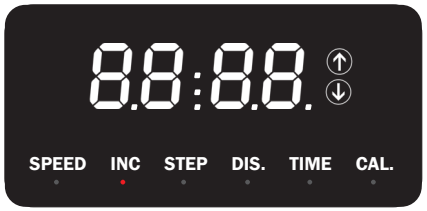

2.INC Incline (Incline Description)

The "INC" window displays the current incline level, ranging from 0 to 9 levels (0% to 12%). In manual mode, the user can use the incline increase or decrease buttons to adjust the incline across 9 levels. Each time the incline button is pressed, the corresponding up or down arrow icon will light up.

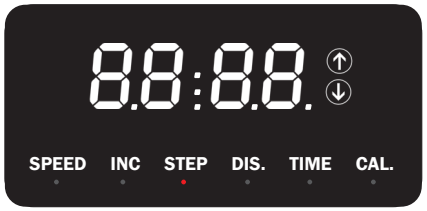

3. STEP (Step Display)

The "STEP" window displays the current step count, ranging from 0 to 9999.

4.DISTANCE (Distance Display)

The "DISTANCE" window displays the current walking distance, ranging from 0 to 99.99 miles, in both manual mode and "M" mode (countdown setting for distance). While the machine is in standby mode, you can use the "M" button to select distance as the unit of measurement for the countdown. By default, it counts down from 1.0 mile, but you can set it within the range of 1.0 to 99.9 miles. Each press of the "+", "-", "∧", or "∨" button adjusts the distance countdown by 0.1 mile.

5.TIME (Time Display)

The "TIME" window displays the current walking time, ranging from 0 to 99:59 minutes, in both manual mode and "M" mode (countdown setting for time). While the machine is in standby mode, you can use the "M" button to select time as the unit of measurement for the countdown. By default, it counts down from 30:00 minutes, but you can set it within the range of 5 to 99 minutes. Each press of the "+", "-", "∧", or "∨" button adjusts the time countdown by 1 minute.

6.Calories Burned (Calorie Consumption Display)

The "CAL" window displays the current calories burned during exercise, ranging from 0 to 999.9 calories, in both manual mode and "M" mode (countdown setting for calories). While the machine is in standby mode, you can use the "M" button to select calories as the unit of measurement for the countdown. By default, it counts down from 50.0 calories, but you can set it within the range of 10 to 990 calories. Each press of the "+", "-", "∧", or "∨" button adjusts the calorie countdown by 10 calories.

Please note that the calories counts on display are estimated based on average user profiles and movement sensors for reference only, not individualized inputs, it only helps users gauge their workout intensity. You can manually track your accurate calorie burn using fitness apps or devices that allow weight input and heart rate monitor.

Remote Control Instructions

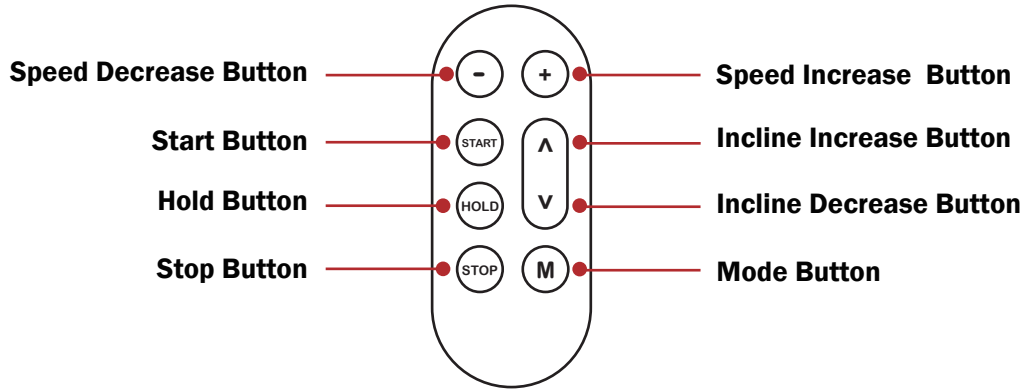

+ - Speed Increase & Decrease Buttons

Adjust the speed using the provided buttons in manual mode. In "M" mode (Countdown Setting), you can also use the "+" or "-" buttons to adjust the time, distance, or calorie countdown targets for your exercise.

∧ ∨ Incline Increase & Decrease Button

Adjust the incline using the provided buttons. In manual mode, you can select from 1 to 9 incline levels. Each time you adjust the incline level, the corresponding up or down arrow lights will illuminate to help you clearly see the changes. In "M" mode (Countdown Setting), you can also use the "∧" or "∨" buttons to adjust the time, distance, or calorie countdown targets for your exercise.

M M Button

When the machine is in standby mode, press the "M" button to switch between countdown targets: calories burned, time, or distance. Use the "+", "-", "∧", or "∨" buttons to set the desired countdown value for the selected target. Once set, press the "START" button to begin running according to the countdown target. The treadmill will automatically stop once the target is reached.

Start Button

Press the "START" button to begin exercise. You can set the speed and incline you want when you walking or jogging. The default speed is 0.6mph, and the maximum speed is 5.0 mph. The treadmill will stop automatically after 99:59 minutes of operation.
When the machine enters a paused state, press the "Start" button to resume operation with the same parameters as before the pause, and the slope will return to its pre-pause value.

Hold Button

When the machine is running, press the "Hold" button to pause it. The machine will enter a paused state and display "PAU". It will save all current motion parameters (speed, incline level, steps, distance, time, and calories burned). For safety, the incline level and speed will gradually decrease to 0. When you press the start button again, the speed and incline level will slowly return to their previous settings, while the step count, calories burned, time, and distance will continue to accumulate.
After the Hold function is activated, you can restart the system by pressing the start button within a maximum of 1 hour by default, and continue walking or jogging, during which data will resume and continue accumulating calculations. If the hold status persists for over 1 hour, historical records in the system will automatically reset to zero, and numerical accumulation calculations will become irrecoverable.

Stop Button

Press the "Stop" button, and the machine will stop running no matter what state it's in. All motion parameters will be reset to zero.

Operation Mode

1 - Manual/Free Mode

1. Manual/Free Mode
Start: After turning on the power switch, the machine enters standby mode. Press "START" to begin using the treadmill directly. The screen will display a 3-2-1 countdown with sound prompts, and the speed will default to 0.6 mph. The step count, calories burned, time, and distance will start counting from 0, and the incline will default to level 0.

During operation, you can adjust the speed and incline at any time:

1. Speed Setting: The speed ranges from 0.6 to 5.0 mph. Each press of the speed increase or decrease button adjusts the speed by 0.2 mph.

2. Incline Setting: The incline ranges from 0 to 9 levels. Each press of the incline increase or decrease button adjusts the incline by 1 level.
During exercise, you can view the current speed, incline, step count, distance, time, and calories burned, with the corresponding indicators lighting up in sequence.

Hold: Press "HOLD" to pause the treadmill at any time. The speed and incline level will gradually decrease to 0, and the calories burned, time, steps, and distance will stop counting. When you press the start button again, the speed and incline level will slowly return to their previous settings, while the step count, calories burned, time, and distance will continue to accumulate.

Stop: Press "STOP" to pause the treadmill at any time. The speed and incline level will gradually decrease to 0, and the calories burned, time, steps, and distance will reset to 0. When you press the start button again, the speed and incline level will not return to their previous settings, and the step count, calories burned, time, and distance will start counting from 0.

Sleep Mode: When the walking pad is powered on, if no remote control commands are issued (excluding the hold/pause function), the machine will automatically enter a screen-off state after 5 minutes and switch to sleep mode to conserve power. You can reactivate the walking pad and resume usage by performing any remote control operation.

Note: In Manual/Free Mode, the treadmill will automatically stop after running for a maximum of 99 minutes and 59 seconds.

2 - Countdown Setting Mode

While the machine is in standby mode, press the "M" button to switch between calories, time, and distance as your countdown target.

1. Calories: Press the "M" button to select calories as the countdown unit. By default, it counts down from 50 calories, but you can set it within the range of 10 to 990 calories, adjusting by 10 calories each time.

2. Time: Press the "M" button to select time as the countdown unit. By default, it counts down from 30 minutes, but you can set it within the range of 5 to 99 minutes, adjusting by 1 minute each time.

3. Distance: Press the "M" button to select distance as the countdown unit. By default, it counts down from 1.0 mile, but you can set it within the range of 1.0 to 99.9 miles, adjusting by 0.1 mile each time.

Once you've selected and set a specific target, press "START" to begin using the treadmill. You can adjust the speed and incline as needed during operation. During exercise, you can view the current speed, incline, step count, distance, time, and calories burned, with the corresponding indicators lighting up in sequence.

Running Belt Adjustment

All treadmills have their running belt adjusted at the factory, but after a while, the running belt may become loose or misaligned. If you notice that the running belt is slipping, it means that it is loose. You can use an L-Wrench to adjust.

To adjust the running belt:

1. Running belt shifted to the left:

- Use the L-Wrench wrench to turn the left rear roller bolt clockwise 1/4 of a turn to tighten the running belt. Then plug in the power cord, and run the treadmill for 3 minutes. Repeat until the running bet is centered.

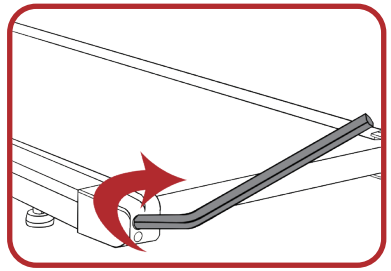

2.Running belt shifted to the right:

- Use the L-Wrench to turn the right rear roller bolt clockwise 1/4 of a turn to tighten the running belt. Then plug in the power cord, and run the treadmill for 3 minutes. Repeat until the running bet is centered.

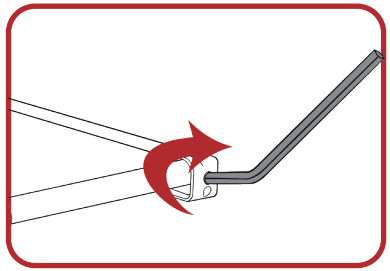

3. Running belt is loose:

- Use the L-Wrench turn both rear idler bolts clockwise 1/4 of a turn to tighten the running belt. Then plug in the power cord, run the treadmill for several minutes. Repeat until the running belt is not slipping.

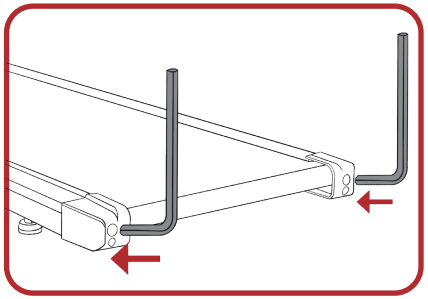

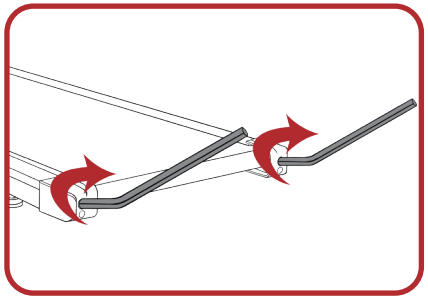

Oil Belt Lubricant

Lubrication:

After using the running belt for a certain period, it is necessary to lubricate it with a special lubricant. The recommended lubrication frequency depends on the usage time:

- For less than 3 hours per week, lubricate every 5 months.
- For 4-7 hours per week, lubricate every 2 months.
- For more than 7 hours per week, lubricate once a month.

Note: Do not add too much lubricant at once.

Check for lubrication:

To check if the running belt needs lubrication, grasp it and touch the center area at the rear as closely as possible. If there is silicone oil on the belt or if it feels slightly slick, it means that lubrication is not needed. If the running belt feels dry and there is no silicone oil on your hand, you need to add lubricant.

To lubricate the running belt, locate the both side of the belt and spray silicone oil on each side of it. Then, run the treadmill at a speed of 0.6mph, spreading the silicone oil evenly and lighting the belt from left to right. After about a minute, the silicone oil will be absorbed into the running belt.

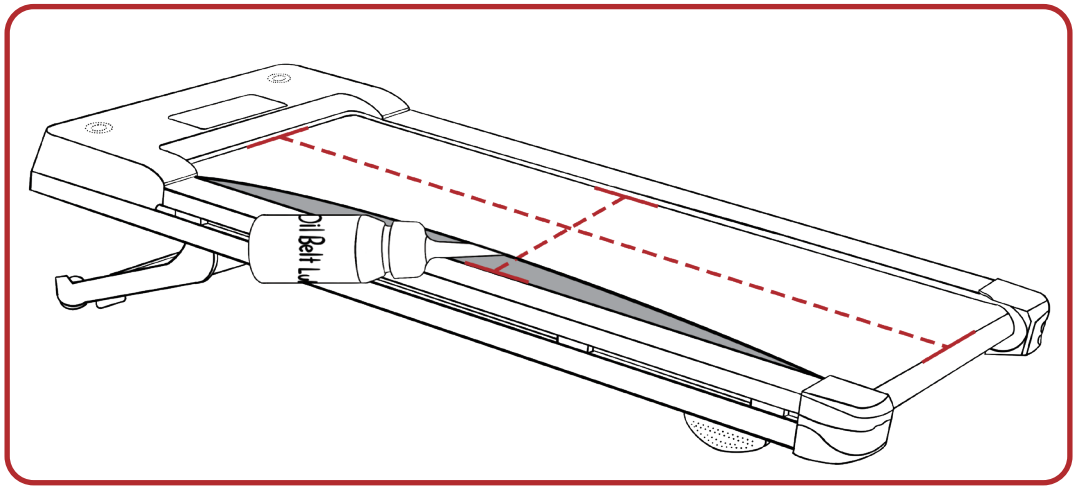

Blue-tooth Speaker Connection

We have a high-quality Hi-Res Audio Bluetooth speaker built so you can enjoy great music while working out.

1- Connect Bluetooth Speaker:

After the walking machine is powered on, you can connect the Bluetooth speaker of the walking machine through devices such as mobile phones or Pad.

IOS & Android device: Enter "Settings - Bluetooth", turn on Bluetooth, search, and select the device "Treadmill", once the connection is successful, there will be sound prompts.

Blue-tooth Device Name: Treadmill

2- Play Music:

You can directly adjust the music volume through your mobile phone /Pad device and select and switch your favorite music.

3- Disconnect the Bluetooth Speaker:

You can directly turn off the Bluetooth function of the mobile phone /Pad, you can disconnect the connection with the Bluetooth speaker of the walking machine, once the disconnect is successful, the walking machine will have a sound prompt.

4- Replace the Player Device:

When a new device is waiting to be connected, the currently connected player device needs to disconnect/turn off the Bluetooth function first, disconnect the connection with the Bluetooth speaker of the walking machine, and the new device can be connected.

Trouble Shooting

When there is a problem with the treadmill's lift and it cannot lift normally:

1-Within 10 seconds of turning on the treadmill's power switch, press and hold the " v " Incline Reduce Button on the remote for about 5 seconds. The lift motor will automatically rise and then lower.

2-The incline value will dynamically display as a scrolling "0" during this process. Once the calibration is successful, this scrolling display will stop.

3- If the scrolling display continues or the lift motor completes its movement but shows an "E09" error code, it means the calibration failed. In this case, repeat step 1 to retry the calibration.

If you find that the walking treadmill isn't available due to error codes ranging from E01 to E15, or if you're facing any issues that disrupt its normal function, please email us immediately!

WALKINGPADPROservice@outlook.com

We're here to help and will swiftly send you a replacement walking treadmill and any necessary accessories. And there is no need to return the faulty treadmill for your convenience.

To ensure we can provide you with the best assistance possible, it would be wonderful if you could prepare the following information when contacting us:

1-Your order number.

2-A description and a picture or video of the issue you're experiencing, attach an error code if it appears on screen.

3-Recipient's full address and phone number.

Safety Information

TO REDUCE THE RISK OF INJURY,PLEASE READ INSTRUCTIONS IN FULL BEFORE USE.

- Intended for at-home use only. Please only use in an area with 3-6 feet of free space around your device. Do not operate your device on a carpet more than 0.5 inches thick or near water.
- Treadmill is not intended for use by children or those with physcial, sensory, or cognitive impairments.
- To avoid injury, do not dissassemble this machine without guidance of manufacturer.
- This product only works with electrical outlets with a voltage between 100 and 120VAC. If your product's plug does not fit your home's outlets, do not attempt to use.
- Check all parts before use to ensure the screws and nuts are not loose.
- Keep fingers away from moving parts. Don't put your hands or feet in the space under the running belt. Keep children or pets away from the treadmill.
- Wear appropriate exercise clothes and athletic shoes while using the treadmill. Loose fitting or oversized clothing can get caught in machine.
- Unstable power supply may overload the circuit. Do not plug high-power devices such as a computer into an outlet on the same circuit.
- This product can only be used by one person at a time.
- Do not place any objects on the machine. Do not stand directly on the belt when the machine is turned on.
- Always unplug the power cord after use before cleaning and performing maintenance.
- Only use manufacturer's accessories. Never exceed product's maximum weight capacity of 450lbs.
- Moisture and overheating will affect the use of the product. Please keep the machine, motor, power cord and plug away from water and high temperatures.
- If the treadmill overheats, emits smoke or a burning smell during use, please stop using it immediately and contact customer service for replacement.

Warranty Statement

The PACEROCKER warranty includes the following contents:

1-Free refund or exchange the walking machine within 90 days from the date of purchase. PACEROCKER VIP members get an additional 9 months of coverage.

2-Free replacement of accessories within 1 year from the date of purchase. PACEROCKER VIP members get an additional 2 years of coverage.

3-Get extra discounts, specific discounts on our products for friends, families and yourself.

FCC Warning

This device complies with Part 15 of the FCC Rules. Operation is subject to the following two conditions:

(1) This device may not cause harmful interference, and (2) this device must accept any interference received, including interference that may cause undesired operation.

NOTE 1: This equipment has been tested and found to comply with the limits for a Class B digital device, pursuant to part 15 of the FCC Rules. These limits are designed to provide reasonable protection against harmful interference in a residential installation. This equipment generates, uses and can radiate radio frequency energy and, if not installed and used in accordance with the instructions, may cause harmful interference to radio communications. However, there is no guarantee that interference will not occur in a particular installation. If this equipment does cause harmful interference to radio or television reception, which can be determined by turning the equipment off and on, the user is encouraged to try to correct the interference by one or more of the following measures:

- Reorient or relocate the receiving antenna.
- Increase the separation between the equipment and receiver.
-Connect the equipment into an outlet on a circuit different from that to which the receiver is connected.
-Consult the dealer or an experienced radio/TV technician for help.

NOTE 2: Any changes or modifications to this unit not expressly approved by the party responsible for compliance could void the user's authority to operate the equipment.

The device has been evaluated to meet general RF exposure requirement. The device can be used in portable exposure condition without restriction.