NerdQX

User Manual

Production Delivery Version V1.0

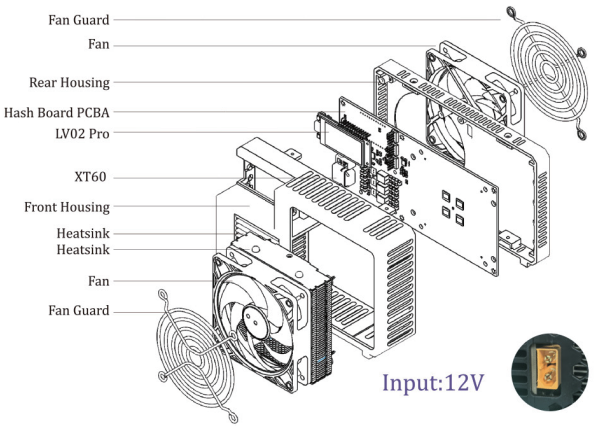

1.Product Overview

NerdQX is a high-performance desktop-class SHA-256 ASIC miner designed for enthusiasts, home miners, and small-scale mining environments.

It features an active air-cooling system (heat pipe heatsink + PWM smart fan), providing stable operation, controlled power consumption, and low noise for long-term 24/7 use.tion, and low noise for long-term 24/7 use.

2.Key Features

·Desktop-friendly form factor for home and personal use
·Active air cooling balancing performance and noise
·Supports multiple mining modes for different pool requirements
·Designed for stable long-term continuous operation

3.Technical Specifications

Model	NerdQX	Algorithm	SHA-256
Cooling Mode	Active Air Cooling	HashRate	7.8TH/s±5%
Network	WiFi2.4G	Power	165W±10%
Mining Modes	SOLO/PPLNS/PPS	Operating Temp	0-35℃
Power Con	XT60	Noise	Typical < 45 dB

4.Package Contents

·NerdQX Miner ×1
·User Manual ×1
·250W Switching Power Supply ×1

5.Product Structure

5.1 Fan:Automatically adjusts speed based on temperature to balance cooling and noise.
5.2 Heatsink:Efficiently dissipates heat from core components.
5.3 Heatsink:Provides independent cooling for stable operation.
5.4 Interface Area
5.4.1 XT60 Connector
5.4.1 XT60 Power Connector
5.4.2 Status Indicator LED (if applicable)
⚠ Do not block the air intake or exhaust vents. Ensure proper airflow at all times.

6.Installation & Power-On

6.1 Place the device on a stable and well-ventilated surface
6.2 Use the included 250W switching power supply
6.3 Securely connect the XT60 power connector
6.4 Connect to AC power to start the device
⚠ Do not plug or unplug the XT60 connector while the device is powered on.

7.Network Configuration (WiFi 2.4G)

7.1 The device supports WiFi 2.4G only (5G not supported)

7.2 Network configuration is completed via the web management interface after power-on

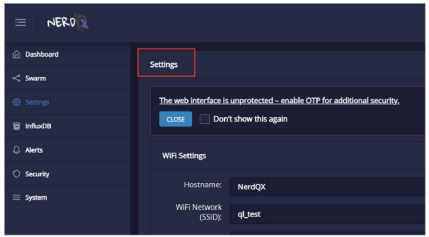

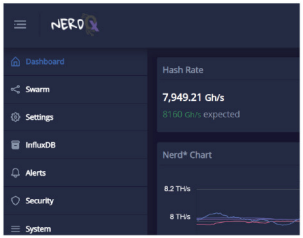

8.Mining Modes

Model	Description
S0L0	Solo mining, suitable for testing and advanced users
PPLNS	Pool mining based on contributed hashrate
PPS	Stable payout pool mode

9.Cooling & Noise

·The PWM fan automatically adjusts speed based on temperature

·Typical operating noise is below 45 dB

·Increased fan speed under high load is normal

10.Safety Notice

Do not disassemble or modify the device
Do not block the cooling airflow
Do not use the device in humid or high-temperature environments
Power off immediately if abnormal behavior occurs

11.Frequently Asked Questions

Q1:Is hashrate or power fluctuation normal?

A1:Yes. Hashrate±5% and power±10% are within normal operating ranges.

Q2:The fan noise is loud after startup. Is this normal?

A2:Yes. During startup or under high load, the PWM fan may increase speed to enhance cooling, which can temporarily increase noise. This is normal behavior.-speed to enhance cooling, which can temporarily increase noise. This is normal behavior.

Q3:The device temperature seems high during operation. Is this an issue?

A3:ASIC miners generate significant heat during operation. As long as the device operates within the specified temperature range (0 – 35 ℃), this is normal.

Q4:Will the power consumption always stay at 165W?

A4:No. Power consumption varies depending on load, ambient temperature, and operating conditions. Values within 165W ±10% are normal.

Q5:Can the device be used in a closed cabinet or enclosed space?

A6:No.Enclosed spaces restrict airflow and may cause overheating, throttling, or protective shutdown.

Q6: Will the device resume mining automatically after a power outage?

A7:Yes. If network and mining configurations remain unchanged, the device will automatically resume operation after power is restored.

Q7:Does the device support 5G WiFi?

A8:No. The device supports WiFi 2.4G only.

Q8: What should I do if the device cannot connect to the network or frequently disconnects?

A10:Please check the following:Ensure the WiFi network is 2.4G,Check router signal strength,Verify network stability,Remove potential sources of interference

Q9:Does the device guarantee mining profits?

A11:No. Mining profitability depends on network difficulty, pool rules, electricity costs, and other external factors.

Q10: What should I do if performance decreases after long-term use?

A12:Regularly check for dust buildup at air intake and exhaust vents and maintain proper ventilation.

Q11: What is the maximum Core Vol setting?

A13: Do not set Core Vol above 1.15V.Higher values may trigger the power adapter’s protection and cause shutdown or instability.

12.Warranty & Disclaimer

The device includes a 6-month warranty, void if disassembled, modified, using unofficial firmware, or damaged by improper use. No after-sales service is provided for unauthorized modifications. Users are responsible for complying with local laws. Mining results are not guaranteed and may vary due to market, difficulty, or pool performance. The manufacturer is not liable for pool access or network issues. Specifications and supported projects may change without notice.

FCC Warnning:

This equipment has been tested and found to comply with the limits for a Class B digital device, pursuant to part 15 of the FCC Rules. These limits are designed to provide reasonable protection againstharmful interference in a residential installation. This equipment generates, uses and can radiateradio frequency energy and, if not installed and used in accordance with the instructions, maycause harmful interference to radio communications. However, there is no guarantee thatinterference will not occur in a particular installation. If this equipment does cause harmfulinterference to radio or television reception, which can be determined by turning the equipmentoff and on, the user is encouraged to try to correct the interference by one or more of thefollowing measures:

- Reorient or relocate the receiving antenna.
- Increase the separation between the equipment and receiver.
- Connect the equipment into an outlet on a circuit different from that to which the receiver is connected.
- Consult the dealer or an experienced radio/TV technician for help.

Caution: Any changes or modifications to this device not explicitly approved by manufacturer could void your authority to operate this equipment.

This device complies with part 15 of the FCC Rules. Operation is subject to the following two conditions:

(1)This device may not cause harmful interference, and (2) this device must accept any interference received, including interference that may cause undesired operation.

This equipment complies with FCC radiation exposure limits set forth for an uncontrolled environment. This equipment should be installed and operated with minimum distance 20cm between the radiator and your body.