TB80
Quick Start Guide

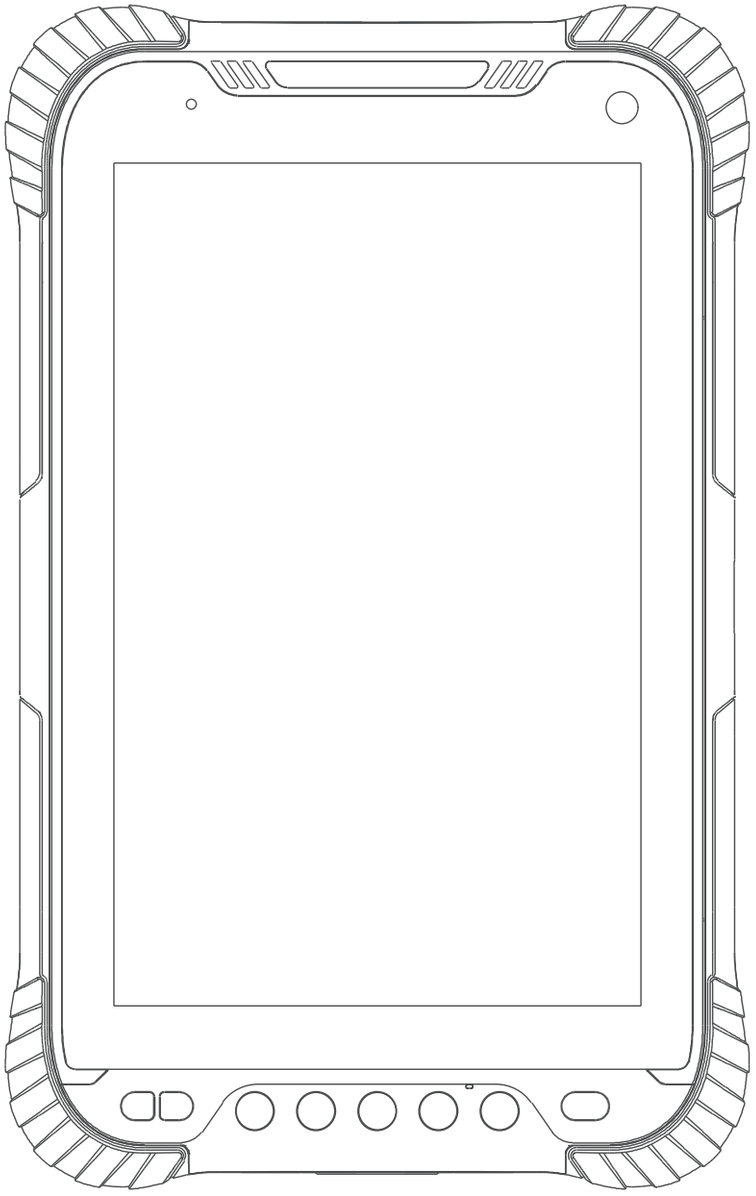

Archimedes Innovation Technology Co., Ltd.
Email：support@archi-inno.com
https://archi-inno.com

What’s in The Box

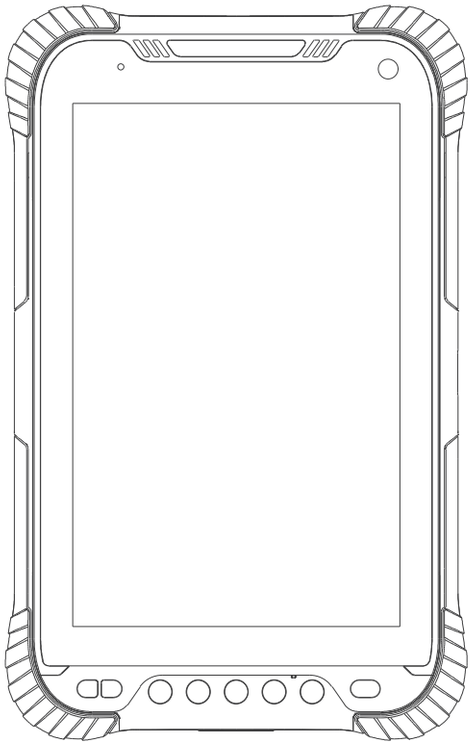

device

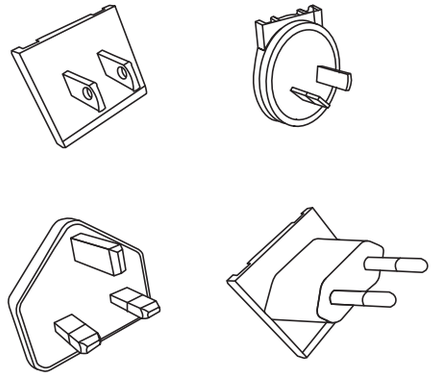

Converter plugs

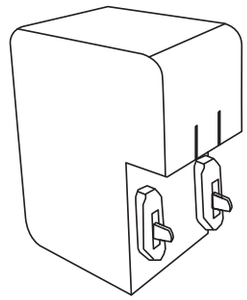

Charging adaptor

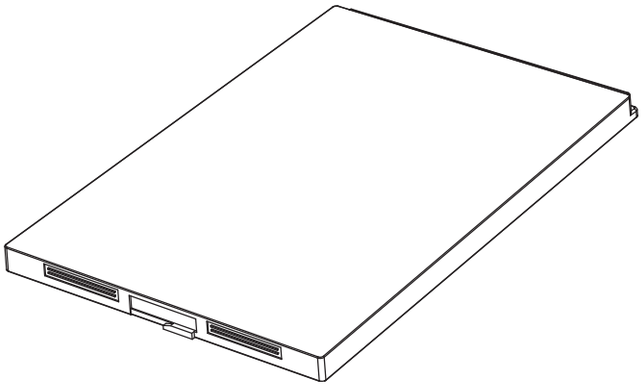

Standard battery

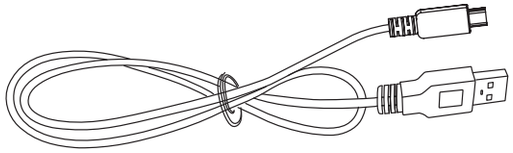

Type-C cable

Archimedes Innovation Technology Co., Ltd.
Email：support@archi-inno.com
https://archi-inno.com

Appearance overview

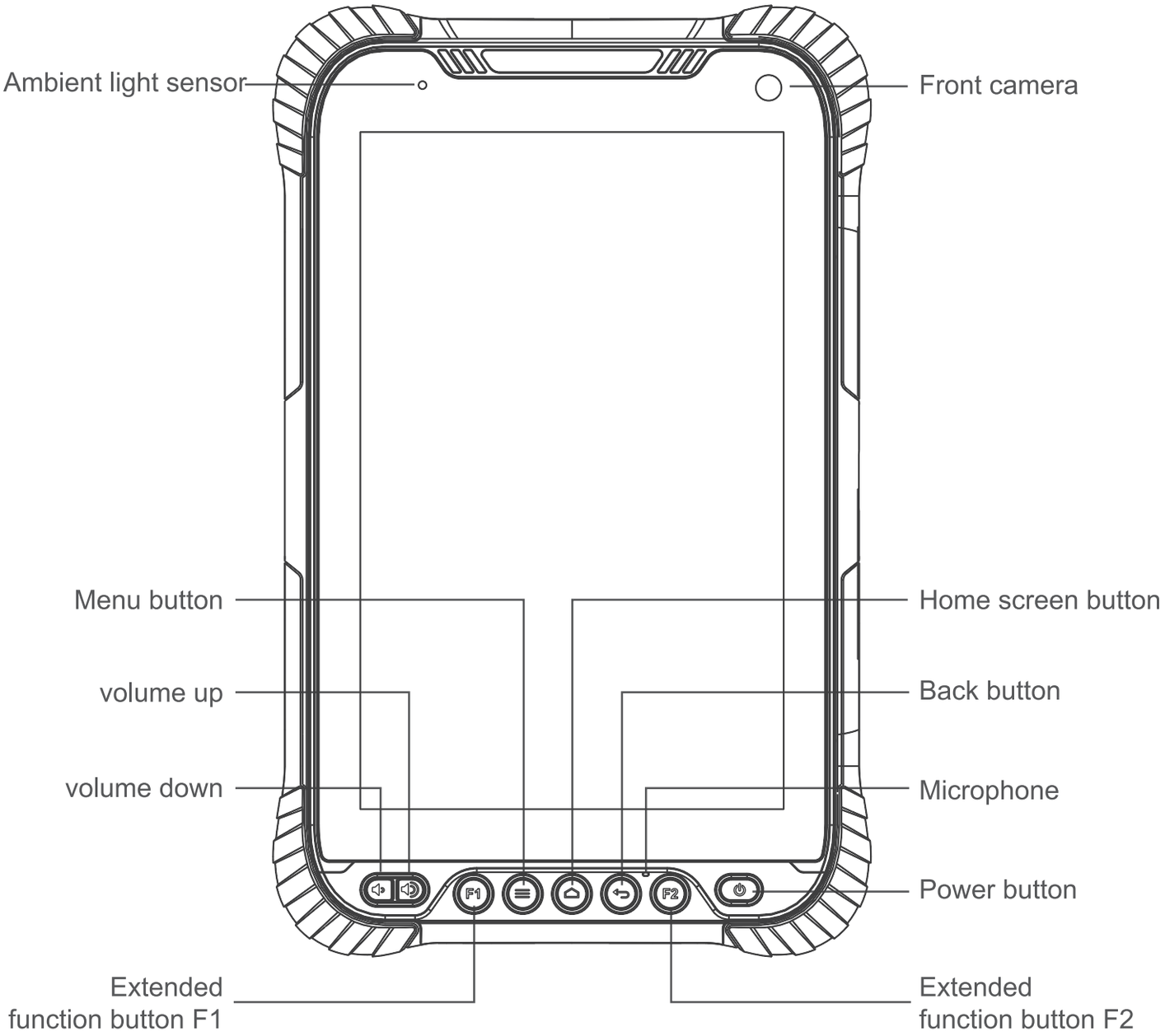

Archimedes Innovation Technology Co., Ltd.
Email: support@archi-inno.com
https://archi-inno.com

Appearance overview

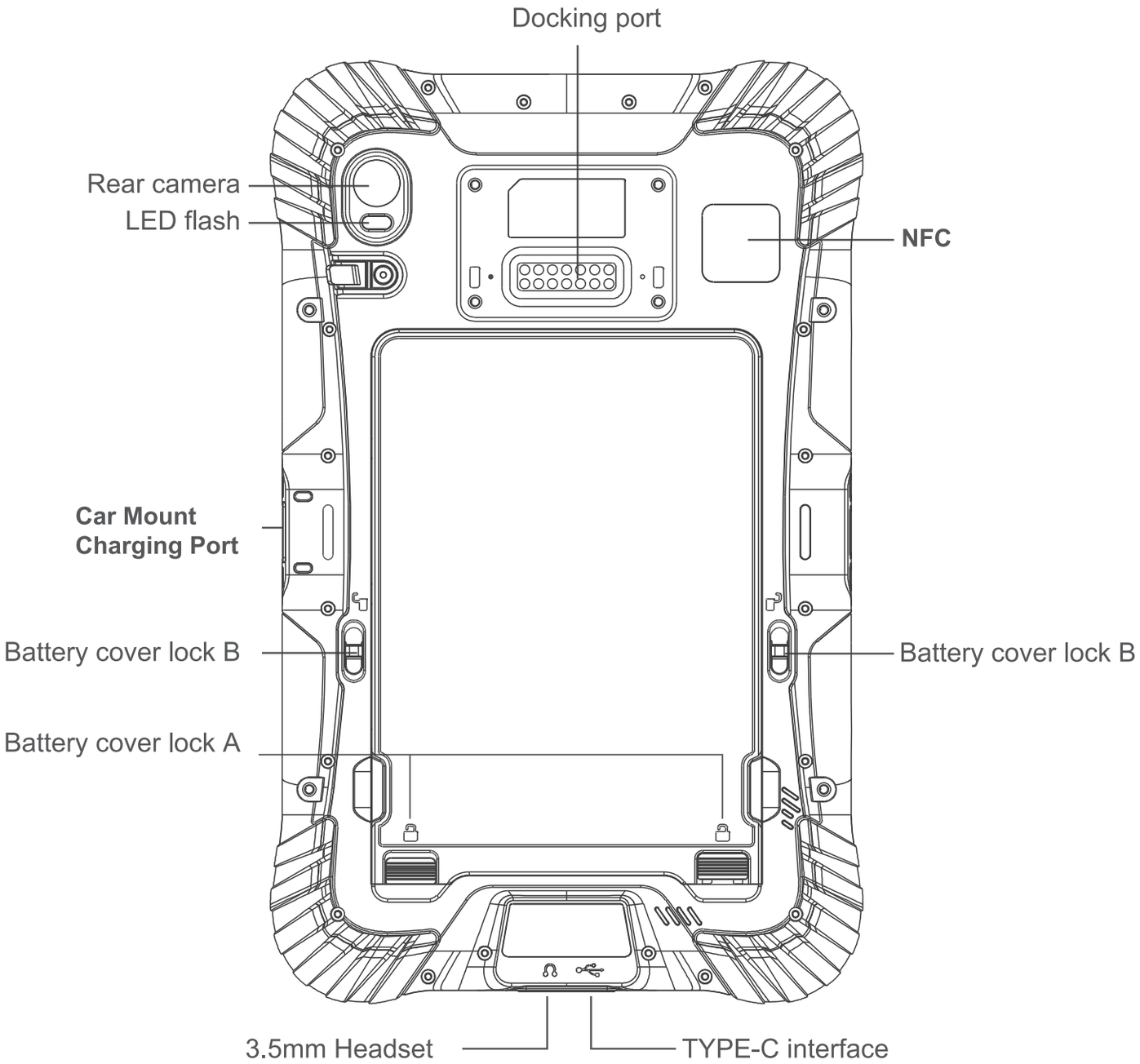

Car Mount Charging Port

Archimedes Innovation Technology Co., Ltd.
Email：support@archi-inno.com
https://archi-inno.com

Sim/micro SD Card

This is how you insert and remove the Nano SIM/micro SD.

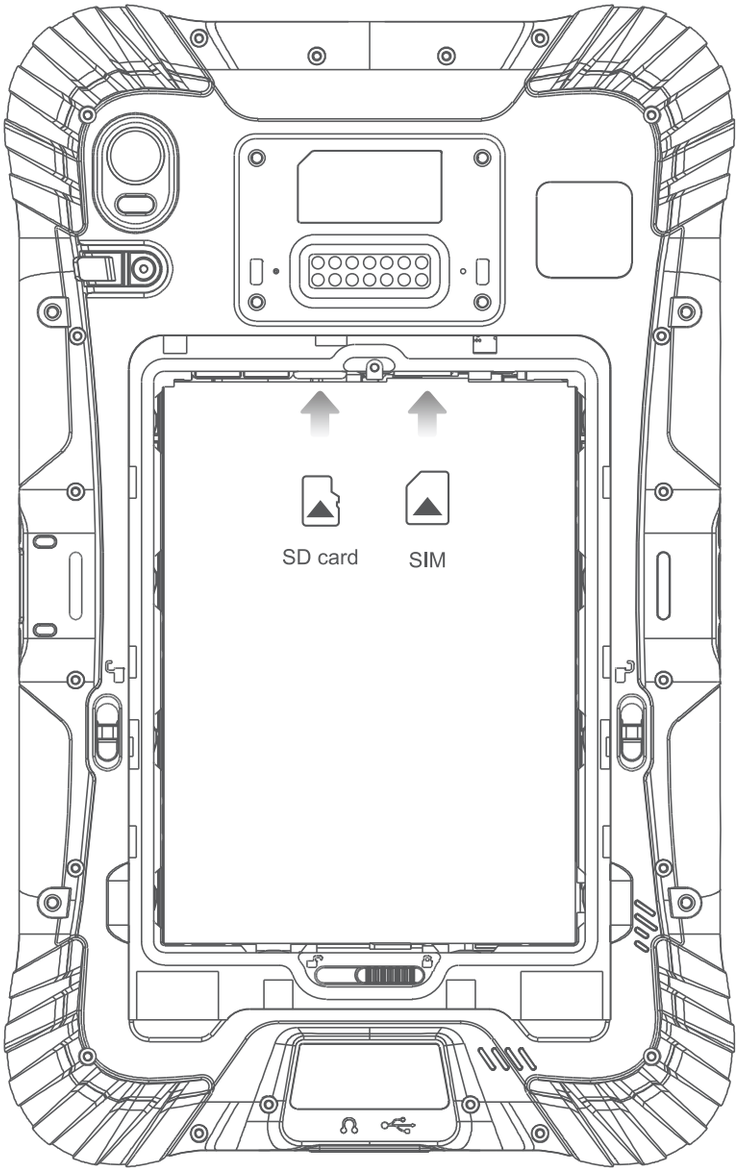

Archimedes Innovation Technology Co., Ltd.
Email: support@archi-inno.com
https://archi-inno.com

Insert Battery

To insert the battery

1. Insert the battery
2. Push the battery lock to the close position
3. Attach the battery cover
4. Push the battery cover lock to the close position

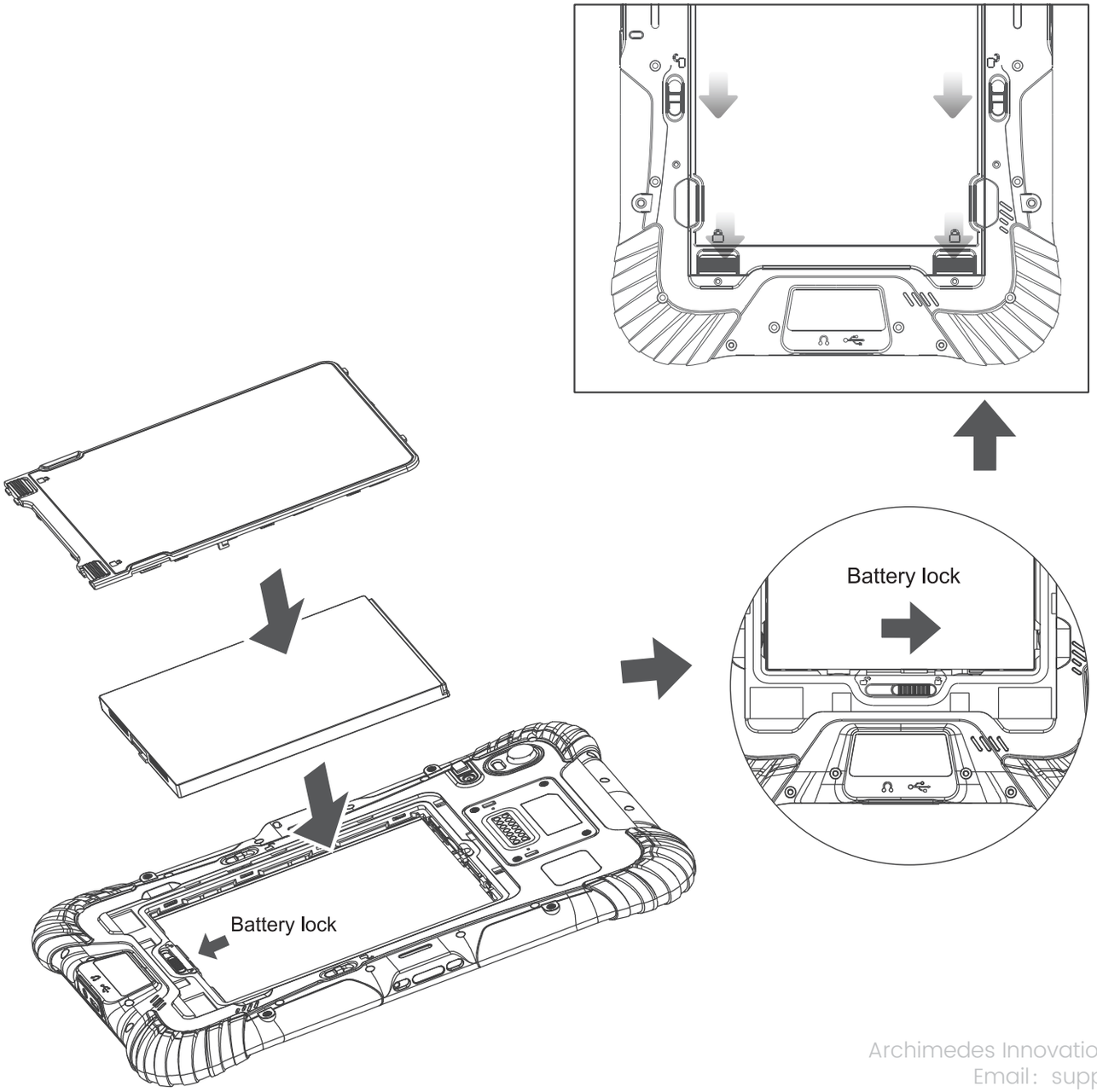

Archimedes Innovation Technology Co., Ltd.
Email：support@archi-inno.com
https://archi-inno.com

Remove Battery

To remove the battery

1. Power off the device before removing the battery
2. Push the battery cover lock to the open position
3. Detach the battery cover
4. Push the battery lock to the open position
5. Remove the battery

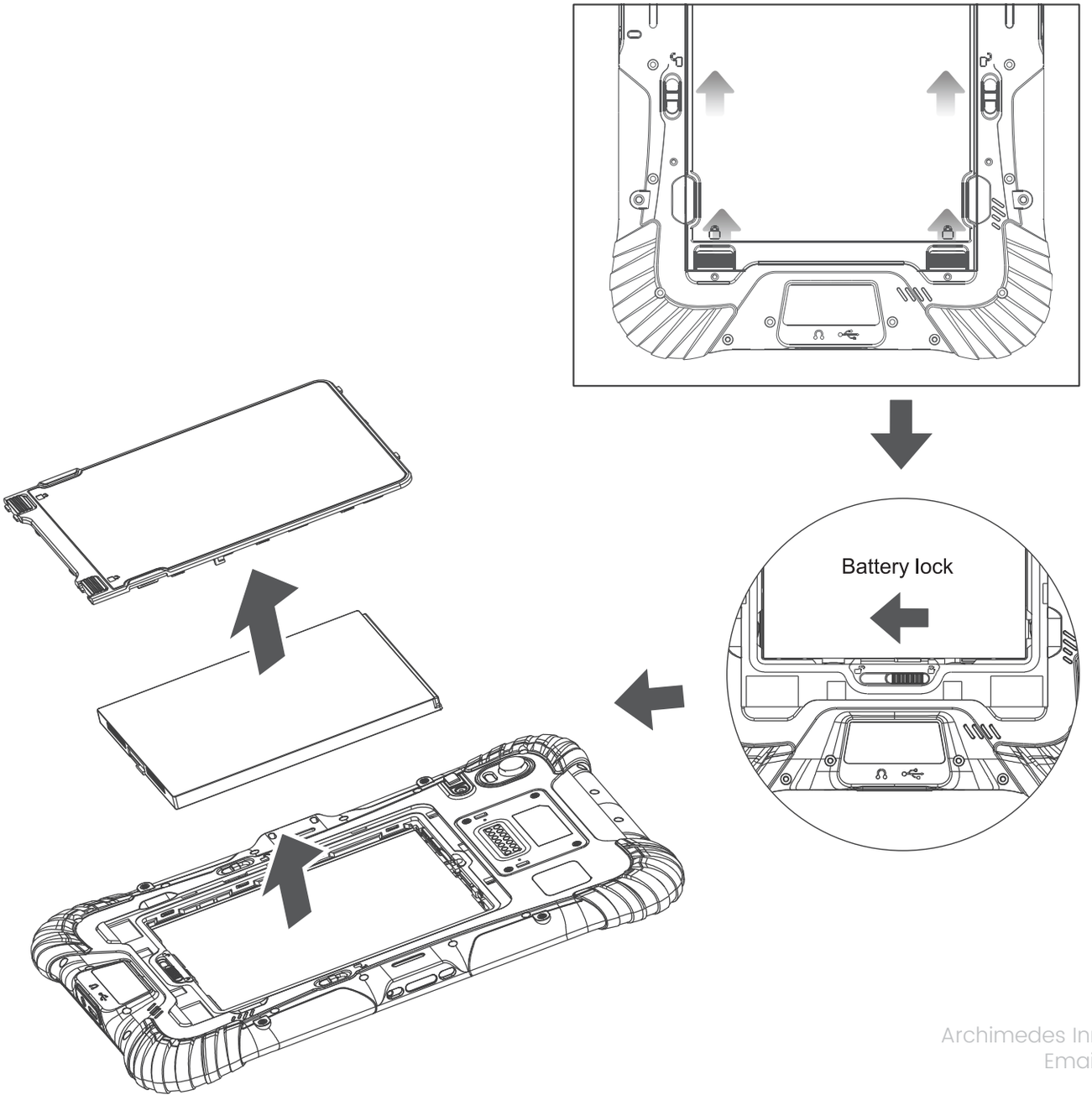

Archimedes Innovation Technology Co., Ltd.
Email: support@archi-inno.com
https://archi-inno.com

RF exposure statement

This device meets the government's requirements for exposure to radio waves. The guidelines are based on standards that were developed by independent scientific organizations through periodic and thorough evaluation of scientific studies. The standards include a substantial safety margin designed to assure the safety of all persons regardless of age or health. The SAR limit of USA (FCC) is 1.6 W/kg averaged. Device types: Rugged Android Tablet (FCC ID: 2BQV3-TB80) has also been tested against this SAR limit. SAR information can be viewed on - line at http://www.fcc.gov/oet/ea/fccid/. Please use the device FCC ID number for search. This device was tested simulation typical 0mm to body. To maintain compliance with FCC RF exposure requirements, use accessories should maintain a separation distance between the user's bodies mentioned above, the use of holsters and similar accessories should not contain metallic components in its assembly, the use of accessories that do not satisfy these requirements may not comply with FCC RF exposure requirements, and should be avoided.

FCC Warning

This device complies with Part 15 of the FCC Rules. Operation is subject to the following two conditions:
(1) This device may not cause harmful interference, and (2) this device must accept any interference received, including interference that may cause undesired operation.

Note: This equipment has been tested and found to comply with the limits for a Class B digital device, pursuant to part 15 of the FCC Rules. These limits are designed to provide reasonable protection against harmful interference in a residential installation. This equipment generates, uses and can radiate radio frequency energy and, if not installed and used in accordance with the instructions, may cause harmful interference to radio

communications. However, there is no guarantee that interference will not occur in a particular installation. If this equipment does
cause harmful interference to radio or television reception, which can be determined by turning the equipment off and on, the user is encouraged to try to correct the interference by one or more of the following measures:

—Reorient or relocate the receiving antenna.

—Increase the separation between the equipment and receiver.

—Connect the equipment into an outlet on a circuit different from that to which the receiver is connected.

—Consult the dealer or an experienced radio/TV technician for help.

NOTE 2: Any changes or modifications to this unit not expressly approved by the party responsible for compliance could void the user's authority to operate the equipment.

Caution:

Intended for sale and application in a business environment.

Use the Product in the environment with the temperature Between -20℃ and 35℃; Otherwise, it may damage your product. Products can only be used below 2000m altitude

For the following equipment:

Product Name: Rugged Android Tablet

Model No.: TB80

Archimedes Innovation Technology Co., Ltd.

https://archi-inno.com

hereby declares that this [Name: Rugged Android tablet, Model: TB80] is in compliance with the essential requirements and other relevant provisions of Directive 2014/53/EU.

CE

The product shall only be connected to a USB interface of version USB2.0 and that the connection to a power USB is allowed.

CAUTION
RISK OF EXPLOSION IF BATTERY IS REPLACED BY AN INCORRECT TYPE.
DISPOSE OF USED BATTERIES ACCORDING TO THE INSTRUCTIONS

This product is intended for sale and application in a business environment.

RED Article 10 2

-This product can be used across EU member states

	BE	BG	CZ	DK	DE	EE	IE
	EL	ES	FR	HR	IT	CY	LV
	LT	LU	HU	MT	NL	AT	PL
	PT	RO	SI	SK	FI	SE	UK (NI)

The device is restricted to indoor use only when operating in the 5150 to 5350 MHz frequency range.

Archimedes Innovation Technology Co., Ltd.
Email: support@archi-inno.com
https://archi-inno.com

The RF distance between body and product is 5mm

Technical Characteristics of EUT	
3G	
Frequency Range:	WCDMA Band 1: Tx: 1920-1980MHz, Rx: 2110-2170MHz
	WCDMA Band 8: Tx: 880-915MHz, Rx: 925-960MHz
RF Output Power:	WCDMA Band 1: 22.22dBm, WCDMA Band 8: 21.70dBm
4G	
Frequency Range:	FDD-LTE Band 1: Tx: 1920-1980MHz, Rx: 2110-2170MHz
	FDD-LTE Band 3: Tx: 1710-1785MHz, Rx: 1805-1880MHz
	FDD-LTE Band 7: Tx: 2500-2570MHz, Rx: 2620-2690MHz
	FDD-LTE Band 8: Tx: 880-915MHz, Rx: 925-960MHz
	FDD-LTE Band 20: Tx:832-862MHz, Rx791-821MHz
	FDD-LTE Band 28: Tx: 703-748MHz, Rx: 758-803MHz
	TDD-LTE Band 38: Tx: 2570-2620MHz, Rx: 2570-2620MHz
	TDD-LTE Band 40: Tx: 2300-2400MHz, Rx: 2300-2400MHz

Max.RF Output Power:	FDD-LTE Band 1: 22.80dBm, FDD-LTE Band 3: 23.87dBm, FDD-LTE Band 7: 23.45dBm, FDD-LTE Band 8: 22.80dBm, FDD-LTE Band 20: 22.82dBm, FDD-LTE Band 28: 22.51dBm, TDD-LTE Band 38: 23.65dBm,TDD-LTE Band 40: 23.62dBm
Wi-Fi (5GHz)	
Support Standards:	802.11a, 802.11n-HT20/40, 802.11ac-VHT20/40/80
RF Output Power	Max. 15.11dBm (EIRP)
Operation Frequency:	Band 1: 5180-5240MHz,
Wi-Fi (5.8GHz)	
Support Standards:	802.11a, 802.11n-HT20/40, 802.11ac-VHT20/40/80
RF Output Power	12.85dBm (EIRP)
Operation Frequency:	5745-5825MHz
Bluetooth	
Bluetooth Version:	Bluetooth V5.1
Frequency Range:	2402-2480MHz
Max.RF Output Power:	1Mbps: 8.89dBm 2Mbps: 9.04dBm

Wi-Fi (2.4GHz)	
Support Standards:	802.11b, 802.11g, 802.11n-HT20/40
Frequency Range:	2412-2472MHz for 802.11b/g/n(HT20) 2422-2462MHz for 802.11n(HT40)
Max.RF Output Power:	16.60dBm (EIRP)
NFC	
Frequency Range:	13.56MHz
Radiated H-Field:	12.81dBuA/m(@3m)