RADIO TEST REPORT
FCC ID: 2BR5Q2BAND100

Product: LUTEA

Trade Mark: LUTEA

Model No.: 2-BAND-100

Family Model: N/A

Report No.: N25101100602E

Issue Date: Nov. 24, 2025

Prepared for

Samphire Group Inc

1209 Orange Street, New Castle County Wilmington, DELAWARE
UNITED STATES 19801

Prepared by

Shenzhen NTEK Testing Technology Co., Ltd.

No. 24 Xinfa East Road, Xiangshan Community, Xinqiao Street,
Baoan District, Shenzhen, Guangdong, People's Republic of China

Tel. 0755-23200050 Website: http://www.ntek.org.cn

Table of Contents **Page**

1 TEST RESULT CERTIFICATION 3

2 SUMMARY OF TEST RESULTS 4

3 FACILITIES AND ACCREDITATIONS 5

3.1 FACILITIES 5
3.2 LABORATORY ACCREDITATIONS AND LISTINGS 5
3.3 MEASUREMENT UNCERTAINTY 5

4 GENERAL DESCRIPTION OF EUT 6

5 DESCRIPTION OF TEST MODES 8

6 SETUP OF EQUIPMENT UNDER TEST 9

6.1 BLOCK DIAGRAM CONFIGURATION OF TEST SYSTEM 9
6.2 SUPPORT EQUIPMENT 10
6.3 EQUIPMENTS LIST FOR ALL TEST ITEMS 11

7 TEST REQUIREMENTS 13

7.1 CONDUCTED EMISSIONS TEST 13
7.2 RADIATED SPURIOUS EMISSION 16
7.3 6DB BANDWIDTH 25
7.4 DUTY CYCLE 26
7.5 PEAK OUTPUT POWER 28
7.6 POWER SPECTRAL DENSITY 29
7.7 CONDUCTED BAND EDGE MEASUREMENT 31
7.8 SPURIOUS RF CONDUCTED EMISSIONS 32
7.9 ANTENNA APPLICATION 33

8 TEST RESULTS 34

8.1 1M 34
8.2 2M 41

1 TEST RESULT CERTIFICATION

Applicant's name .....:	Samphire Group Inc
Address .....:	1209 Orange Street, New Castle County Wilmington, DELAWARE UNITED STATES 19801
Manufacturer's Name .....:	Samphire Group Inc
Address .....:	1209 Orange Street, New Castle County Wilmington, DELAWARE UNITED STATES 19801
Product description	Electrical stimulation apparatus
Product name .....:	LUTEA
Trade Mark .....:	LUTEA
Model and/or type reference .....:	2-BAND-100
Family Model .....:	N/A
Test Sample number .....:	S2510110108-1#
Date of Test .....:	Oct. 11, 2025 ~Nov. 24, 2025

Measurement Procedure Used:

APPLICABLE STANDARDS	
APPLICABLE STANDARD/ TEST PROCEDURE	TEST RESULT
FCC 47 CFR Part 2, Subpart J FCC 47 CFR Part 15, Subpart C ANSI C63.10-2020 KDB 558074 D01 15.247 Meas Guidance v05r02	Complied

This device described above has been tested by Shenzhen NTEK Testing Technology Co., Ltd., and the test results show that the equipment under test (EUT) is in compliance with the FCC requirements. And it is applicable only to the tested sample identified in the report.
This report shall not be reproduced except in full, without the written approval of Shenzhen NTEK Testing Technology Co., Ltd., this document may be altered or revised by Shenzhen NTEK Testing Technology Co., Ltd., personnel only, and shall be noted in the revision of the document.
The test results of this report relate only to the tested sample identified in this report.

Prepared By:	Reviewed By:	Approved By:
Mary Hu	Aaron Cheng	Alex Li
(Project Engineer)	(Supervisor)	(Manager)

2 SUMMARY OF TEST RESULTS

FCC Part15 (15.247), Subpart C			
Standard Section	**Test Item**	**Verdict**	**Remark**
15.207	Conducted Emission	PASS	
15.247 (a)(2)	6dB Bandwidth	PASS	
15.247 (b)	Peak Output Power	PASS	
15.209 (a) 15.205 (a)	Radiated Spurious Emission	PASS	
15.247 (e)	Power Spectral Density	PASS	
15.247 (d)	Band Edge Emission	PASS	
15.247 (d)	Spurious RF Conducted Emission	PASS	
15.203	Antenna Requirement	PASS	

Remark:
1. "N/A" denotes test is not applicable in this Test Report.
2. All test items were verified and recorded according to the standards and without any deviation during the test.

3 FACILITIES AND ACCREDITATIONS

3.1 FACILITIES

All measurement facilities used to collect the measurement data are located at
No. 24 Xinfa East Road, Xiangshan Community, Xinqiao Street, Baoan District, Shenzhen, Guangdong, People's Republic of China.
The sites are constructed in conformance with the requirements of ANSI C63.7, ANSI C63.10 and CISPR Publication 22.

3.2 LABORATORY ACCREDITATIONS AND LISTINGS

Site Description

CNAS-Lab.	:	The Certificate Registration Number is L5516.
IC-Registration		The Certificate Registration Number is 9270A. CAB identifier:CN0074
FCC- Accredited		Test Firm Registration Number: 463705. Designation Number: CN1184
A2LA-Lab.		The Certificate Registration Number is 4298.01 This laboratory is accredited in accordance with the recognized International Standard ISO/IEC 17025:2005 General requirements for the competence of testing and calibration laboratories. This accreditation demonstrates technical competence for a defined scope and the operation of a laboratory quality management system (refer to joint ISO-ILAC-IAF Communiqué dated 8 January 2009).
Name of Firm	:	Shenzhen NTEK Testing Technology Co., Ltd.
Site Location	:	No. 24 Xinfa East Road, Xiangshan Community, Xinqiao Street, Baoan District, Shenzhen, Guangdong, People's Republic of China.

3.3 MEASUREMENT UNCERTAINTY

The reported uncertainty of measurement y±U, where expended uncertainty U is based on a standard uncertainty multiplied by a coverage factor of k=2, providing a level of confidence of approximately 95 %.

No.	Item	Uncertainty
1	Conducted Emission Test	±2.80dB
2	RF power, conducted	±0.16dB
3	Spurious emissions, conducted	±0.21dB
4	All emissions, radiated(30MHz~1GHz)	±2.64dB
5	All emissions, radiated(1GHz~6GHz)	±2.40dB
6	All emissions, radiated(＞6GHz)	±2.52dB
7	Temperature	±0.5°C
8	Humidity	±2%
9	All emissions, radiated(9KHz~30MHz)	±6dB

4 GENERAL DESCRIPTION OF EUT

Product Feature and Specification	
Equipment	LUTEA
Trade Mark	LUTEA
FCC ID	2BR5Q2BAND100
Model No.	2-BAND-100
Family Model	N/A
Model Difference	N/A
Operating Frequency	2402~2480 MHz
Modulation	GFSK
Number of Channels	Please refer channel list
Antenna Type	PCB Antenna
Antenna Gain	2.82dBi
Adapter	MODEL: LXCP12-005200XFH INPUT: 100-240V~50/60Hz 0.5A Max OUTPUT: DC 5.0V⎓2.0A 10.0W
Battery	DC 3.7V, 400mAh
Power supply	DC 3.7V from battery or DC 5V from adapter
HW Version	SNPA2-samphire-p7
FW Version	fw_emc_v1
SW Version	MNT-EMC-v1.1.25

Note 1: Based on the application, features, or specification exhibited in User's Manual, the EUT is considered as an ITE/Computing Device. More details of EUT technical specification, please refer to the User's Manual.
Note 2: The engineering test program was provided and the EUT was programmed to be in continuously transmitting mode.

Revision History

Report No.	Version	Description	Issued Date
N25101100602E	Rev.01	Initial issue of report	Nov. 24, 2025

5 DESCRIPTION OF TEST MODES

To investigate the maximum EMI emission characteristics generates from EUT, the test system was pre-scanning tested base on the consideration of following EUT operation mode or test configuration mode which possible have effect on EMI emission level. Each of these EUT operation mode(s) or test configuration mode(s) mentioned above was evaluated respectively.

The Transmitter was operated in the normal operating mode. The TX frequency was fixed which was for the purpose of the measurements.

Test of channel included the lowest and middle and highest frequency to perform the test, then record on this report.

Those data rates (1Mbps/2Mbps for GFSK modulation) were used for all test.

The EUT was pretested with 3 orientations placed on the table for the radiated emission measurement –X, Y, and Z-plane. The X-plane results were found as the worst case and were shown in this report.

Carrier Frequency and Channel list:

Channel	Frequency(MHz)
0	2402
1	2404
…	…
19	2440
20	2442
…	…
38	2478
39	2480

Note: fc=2402MHz+k×2MHz k=0 to 39

The following summary table is showing all test modes to demonstrate in compliance with the standard.

Test Cases	
Test Item	Data Rate/ Modulation
AC conducted Test Cases	Mode 1: normal link mode
Radiated Test Cases	Mode 1: normal link mode
	Mode 2: GFSK Tx Ch00_2402MHz_1Mbps/2Mbps
	Mode 3: GFSK Tx Ch19_2440MHz_1Mbps/2Mbps
	Mode 4: GFSK Tx Ch39_2480MHz_1Mbps/2Mbps
conducted Test Cases	Mode 2: GFSK Tx Ch00_2402MHz_1Mbps/2Mbps
	Mode 3: GFSK Tx Ch19_2440MHz_1Mbps/2Mbps
	Mode 4: GFSK Tx Ch39_2480MHz_1Mbps/2Mbps

Note:
1. The engineering test program was provided and the EUT was programmed to be in continuously transmitting mode.
2. For radiated test cases, the worst mode data rate 1Mbps was reported only, because this data rate has the highest RF output power at preliminary tests, and no other significantly frequencies found in conducted spurious emission.
3. EUT built-in battery-powered, the battery is fully-charged.

6 SETUP OF EQUIPMENT UNDER TEST

6.1 BLOCK DIAGRAM CONFIGURATION OF TEST SYSTEM

For AC Conducted Emission Mode

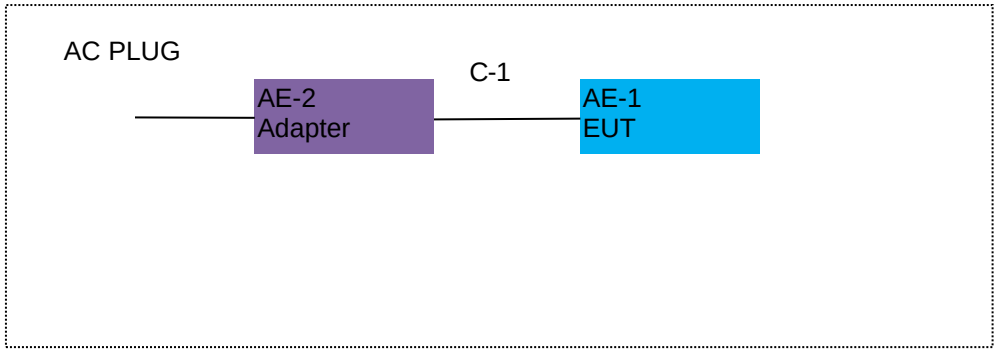

For Radiated Test Cases

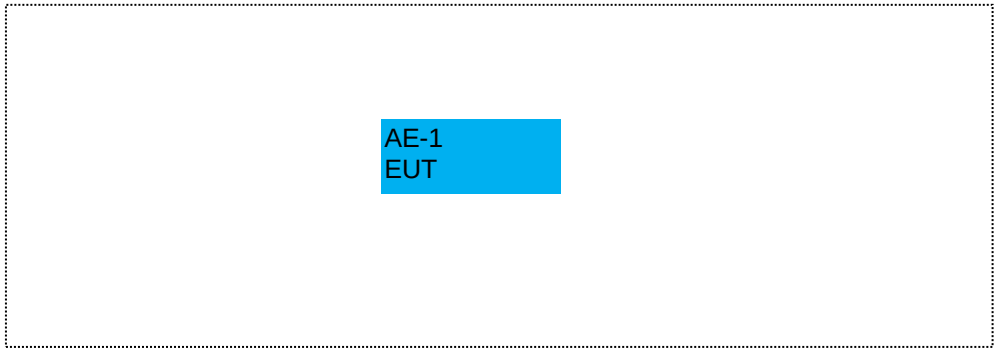

For Conducted Test Cases

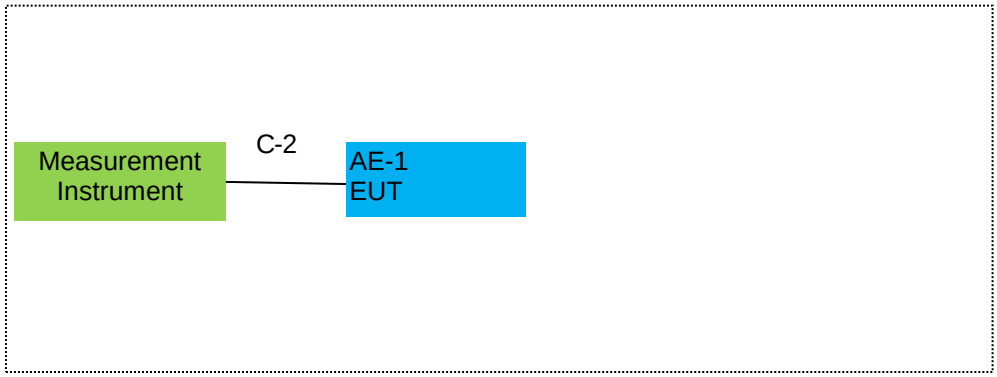

Note: The temporary antenna connector is soldered on the PCB board in order to perform conducted tests and this temporary antenna connector is listed in the equipment list.

6.2 SUPPORT EQUIPMENT

The EUT has been tested as an independent unit together with other necessary accessories or support units. The following support units or accessories were used to form a representative test configuration during the tests.

Item	Equipment	Model/Type No.	Series No.	Note
AE-1	LUTEA	2-BAND-100	N/A	EUT
AE-2	Adapter	LXCP12-005200XFH	N/A	Peripherals

Item	Cable Type	Shielded Type	Ferrite Core	Length
C-1	Power Cable	NO	NO	2.9m
C-2	RF Cable	YES	NO	0.1m

Notes:

(1) The support equipment was authorized by Declaration of Confirmation.
(2) For detachable type I/O cable should be specified the length in cm in『Length』column.
(3) “YES” is means “shielded” “with core”; “NO” is means “unshielded” “without core”.

6.3 EQUIPMENTS LIST FOR ALL TEST ITEMS

Radiation& Conducted Test equipment

Item	Kind of Equipment	Manufacturer	Type No.	Serial No.	Last calibration	Calibrated until	Calibration period
1	Spectrum Analyzer	Agilent	E4440A	MY41000130	2025.04.24	2026.04.23	1 year
2	Spectrum Analyzer	Agilent	N9020A	MY49100060	2025.04.17	2026.04.16	1 year
3	Spectrum Analyzer	R&S	FSV40	101417	2025.04.17	2026.04.16	1 year
4	Test Receiver	R&S	ESPI7	101318	2025.04.17	2026.04.16	1 year
5	Bilog Antenna	TESEQ	CBL6111D	31216	2025.04.17	2026.04.16	1 year
6	50Ω Coaxial Switch	Anritsu	MP59B	6200983705	2024.04.26	2027.04.25	3 year
7	Horn Antenna	EM	EM-AH-10180	2011071402	2024.05.12	2027.05.11	3 year
8	Broadband Horn Antenna	SCHWARZBECK	BBHA 9170	803	2024.05.12	2027.05.11	3 year
9	Amplifier	EMC	EMC051835SE	980246	2025.04.17	2026.04.16	1 year
10	Active Loop Antenna	SCHWARZBECK	FMZB 1519 B	055	2024.05.17	2027.05.16	3 year
11	Power Meter	DARE	RPR3006W	15I00041SNO84	2025.04.17	2026.04.16	1 year
12	Test Cable (9KHz-30MHz)	N/A	R-01	N/A	2023.05.06	2026.05.05	3 year
13	Test Cable (30MHz-1GHz)	N/A	R-02	N/A	2023.05.06	2026.05.05	3 year
14	High Test Cable(1G-40GHz)	N/A	R-03	N/A	2023.05.06	2026.05.05	3 year
15	Filter	TRILTHIC	2400MHz	29	2024.04.26	2027.04.25	3 year
16	temporary antenna connector (Note)	NTS	R001	N/A	N/A	N/A	N/A

Note:
We will use the temporary antenna connector (soldered on the PCB board) When conducted test
And this temporary antenna connector is listed within the instrument list

AC Conduction Test equipment

Item	Kind of Equipment	Manufacturer	Type No.	Serial No.	Last calibration	Calibrated until	Calibration period
1	Test Receiver	R&S	ESCI	101160	2025.04.17	2026.04.16	1 year
2	LISN	R&S	ENV216	101313	2025.04.16	2026.04.15	1 year
3	LISN	SCHWARZBECK	NNLK 8129	8129245	2025.04.16	2026.04.15	1 year
4	50Ω Coaxial Switch	ANRITSU CORP	MP59B	6200983704	2024.04.26	2027.04.25	3 year
5	Test Cable (9KHz-30MHz)	N/A	C01	N/A	2023.05.06	2026.05.05	3 year
6	Test Cable (9KHz-30MHz)	N/A	C02	N/A	2023.05.06	2026.05.05	3 year
7	Test Cable (9KHz-30MHz)	N/A	C03	N/A	2023.05.06	2026.05.05	3 year

Note: Each piece of equipment is scheduled for calibration once a year except the Aux Equipment & Test Cable which is scheduled for calibration every 2 or 3 years.

Measurement Software

Item	Manufacturer	Software Name	Software Version	Description
1	WCS Technology	WCS-WCN	2024.10.29	RF Conducted Test
2	Farad	EZ-EMC_RE	AIT-03A	RadiatedTest
3	Farad	EZ-EMC_CE	AIT-03A	AC Conducted Test

7 TEST REQUIREMENTS

7.1 CONDUCTED EMISSIONS TEST

7.1.1 Applicable Standard

According to FCC Part 15.207(a)

7.1.2 Conformance Limit

Frequency(MHz)	Conducted Emission Limit	
	Quasi-peak	Average
0.15-0.5	66-56*	56-46*
0.5-5.0	56	46
5.0-30.0	60	50

Note: 1. *Decreases with the logarithm of the frequency
2. The lower limit shall apply at the transition frequencies
3. The limit decreases in line with the logarithm of the frequency in the range of 0.15 to 0.50MHz.

7.1.3 Measuring Instruments

The Measuring equipment is listed in the section 6.3 of this test report.

7.1.4 Test Configuration

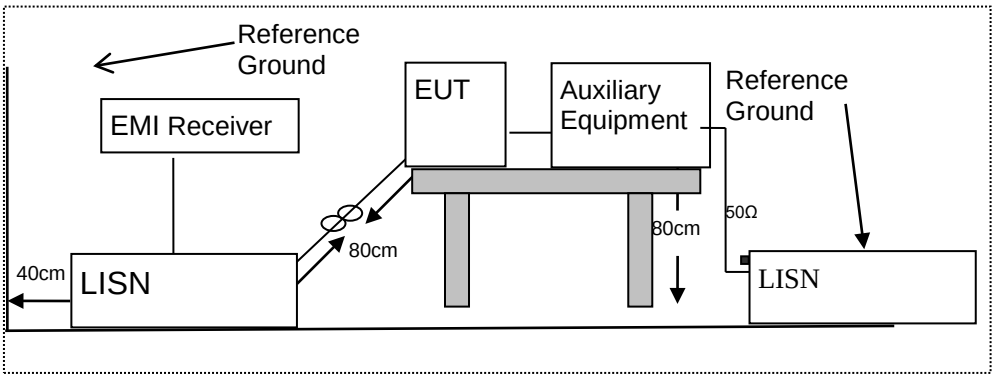

7.1.5 Test Procedure

According to the requirements in Section 13.1.4.1 of ANSI C63.10-2020 Conducted emissions the EUT measured in the frequency range between 0.15 MHz and 30 MHz using CISPR Quasi-Peak and average detector mode.

1. The EUT was placed 0.4 meter from the conducting wall of the shielding room.
2. The EUT was placed on a table which is 0.8m above ground plane.
3. Connect EUT to the power mains through a line impedance stabilization network (LISN). All other support equipments powered from additional LISN(s). The LISN provide 50 Ohm/ 50uH of coupling impedance for the measuring instrument.
4. Interconnecting cables that hang closer than 40 cm to the ground plane shall be folded back and forth in the center forming a bundle 30 to 40cm long.
5. I/O cables that are not connected to a peripheral shall be bundled in the center. The end of the cable may be terminated, if required, using the correct terminating impedance. The overall length shall not exceed 1 m.
6. LISN at least 80 cm from nearest part of EUT chassis.
7. The frequency range from 150KHz to 30MHz was searched.
8. Set the test-receiver system to Peak Detect Function and specified bandwidth(IF bandwidth=9KHz) with Maximum Hold Mode
9. For the actual test configuration, please refer to the related Item –EUT Test Photos.

7.1.6 **Test Results**

EUT：	LUTEA	Model Name ：	2-BAND-100
Temperature：	23.3 ℃	Relative Humidity：	50%
Pressure：	1010hPa	Phase :	L
Test Voltage ：	DC 5V from Adapter AC 120V/60Hz	Test Mode：	Mode 1

Frequency (MHz)	Reading Level (dBμV)	Correct Factor (dB)	Measure-ment (dBμV)	Limits (dBμV)	Margin (dB)	Remark
0.5380	18.61	19.56	38.17	56.00	-17.83	QP
0.5380	8.89	19.56	28.45	46.00	-17.55	AVG
0.6740	17.49	19.58	37.07	56.00	-18.93	QP
0.6740	7.07	19.58	26.65	46.00	-19.35	AVG
0.8139	16.51	19.59	36.10	56.00	-19.90	QP
0.8139	6.80	19.59	26.39	46.00	-19.61	AVG
1.1539	14.16	19.60	33.76	56.00	-22.24	QP
1.1539	3.73	19.60	23.33	46.00	-22.67	AVG
1.6100	12.82	19.63	32.45	56.00	-23.55	QP
1.6100	1.96	19.63	21.59	46.00	-24.41	AVG
3.5260	9.26	19.73	28.99	56.00	-27.01	QP
3.5260	-2.32	19.73	17.41	46.00	-28.59	AVG

Remark:
1. All readings are Quasi-Peak and Average values.
2. Factor = Insertion Loss + Cable Loss.

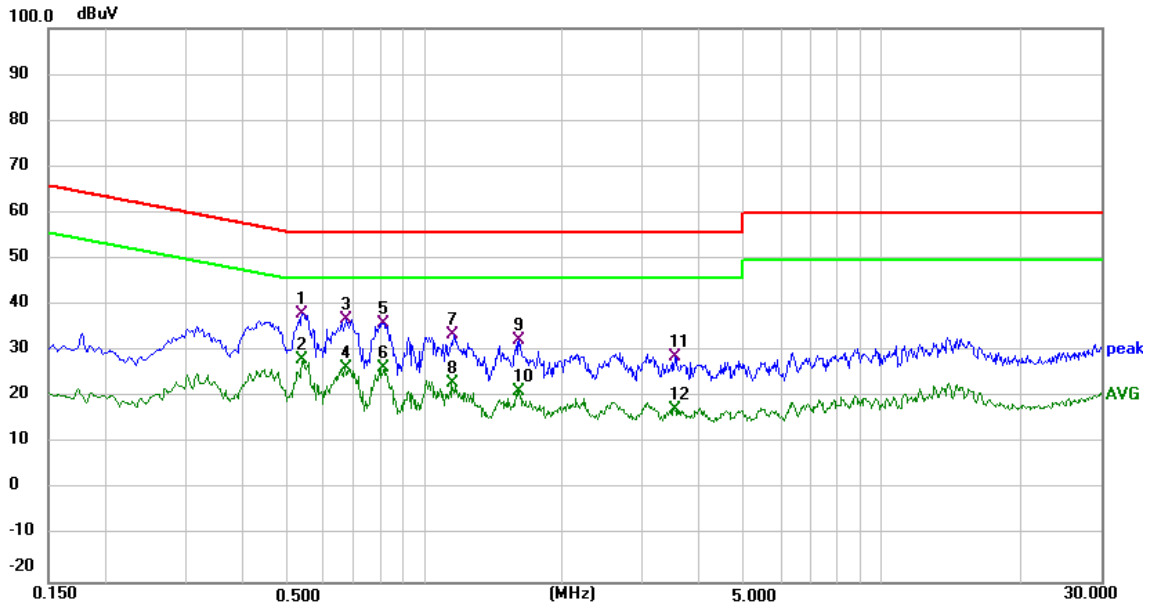

EUT：	LUTEA	Model Name ：	2-BAND-100
Temperature：	23.3 ℃	Relative Humidity：	50%
Pressure：	1010hPa	Phase :	N
Test Voltage ：	DC 5V from Adapter AC 120V/60Hz	Test Mode：	Mode 1

Frequency (MHz)	Reading Level (dBμV)	Correct Factor (dB)	Measure-ment (dBμV)	Limits (dBμV)	Margin (dB)	Remark
0.4460	16.24	19.55	35.79	56.95	-21.16	QP
0.4460	9.13	19.55	28.68	46.95	-18.27	AVG
0.5500	18.60	19.57	38.17	56.00	-17.83	QP
0.5500	10.93	19.57	30.50	46.00	-15.50	AVG
0.8059	15.38	19.63	35.01	56.00	-20.99	QP
0.8059	8.59	19.63	28.22	46.00	-17.78	AVG
1.5740	12.44	19.65	32.09	56.00	-23.91	QP
1.5740	4.97	19.65	24.62	46.00	-21.38	AVG
2.2100	12.20	19.69	31.89	56.00	-24.11	QP
2.2100	2.91	19.69	22.60	46.00	-23.40	AVG
4.0020	10.34	19.82	30.16	56.00	-25.84	QP
4.0020	2.04	19.82	21.86	46.00	-24.14	AVG

Remark:
1. All readings are Quasi-Peak and Average values.
2. Factor = Insertion Loss + Cable Loss.

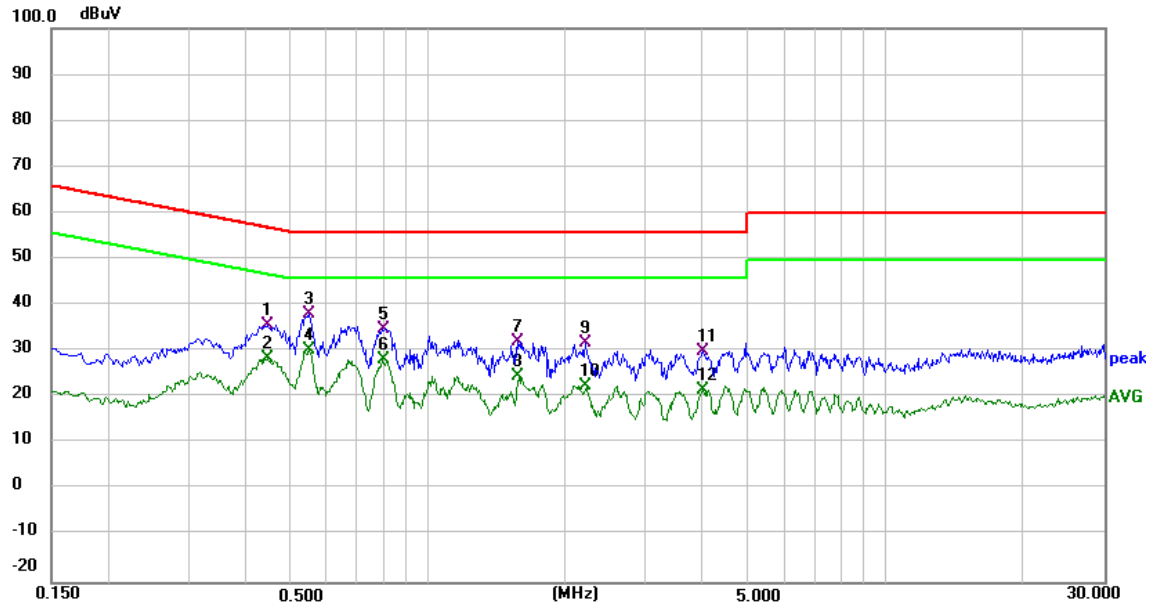

7.2 RADIATED SPURIOUS EMISSION

7.2.1 Applicable Standard

According to FCC Part 15.247(d) and 15.209 and ANSI C63.10-2020

7.2.2 Conformance Limit

According to FCC Part 15.247(d): radiated emissions which fall in the restricted bands, as defined in §15.205(a), must also comply with the radiated emission limits specified in §15.209(a) (see §15.205(c)).
According to FCC Part15.205, Restricted bands

MHz	MHz	MHz	GHz
0.090-0.110	16.42-16.423	399.9-410	4.5-5.15
0.495-0.505	16.69475-16.69525	608-614	5.35-5.46
2.1735-2.1905	16.80425-16.80475	960-1240	7.25-7.75
4.125-4.128	25.5-25.67	1300-1427	8.025-8.5
4.17725-4.17775	37.5-38.25	1435-1626.5	9.0-9.2
4.20725-4.20775	73-74.6	1645.5-1646.5	9.3-9.5
6.215-6.218	74.8-75.2	1660-1710	10.6-12.7
6.26775-6.26825	123-138	2200-2300	14.47-14.5
8.291-8.294	149.9-150.05	2310-2390	15.35-16.2
8.362-8.366	156.52475-156.52525	2483.5-2500	17.7-21.4
8.37625-8.38675	156.7-156.9	2690-2900	22.01-23.12
8.41425-8.41475	162.0125-167.17	3260-3267	23.6-24.0
12.29-12.293	167.72-173.2	3332-3339	31.2-31.8
12.51975-12.52025	240-285	3345.8-3358	36.43-36.5
12.57675-12.57725	322-335.4	3600-4400	(2)
13.36-13.41			

20dBc in any 100 kHz bandwidth outside the operating frequency band. In case the emission fall within the restricted band specified on 15.205(a), then the 15.209(a) limit in the table below has to be followed.

Restricted Frequency(MHz)	Field Strength (μV/m)	Field Strength (dBμV/m)	Measurement Distance
0.009~0.490	2400/F(KHz)	20 log (uV/m)	300
0.490~1.705	24000/F(KHz)	20 log (uV/m)	30
1.705~30.0	30	29.5	30
30-88	100	40	3
88-216	150	43.5	3
216-960	200	46	3
Above 960	500	54	3

Limits of Radiated Emission Measurement(Above 1000MHz)

Frequency(MHz)	Class B (dBuV/m) (at 3M)	
	PEAK	AVERAGE
Above 1000	74	54

Remark :1. Emission level in dBuV/m=20 log (uV/m)
2. Measurement was performed at an antenna to the closed point of EUT distance of meters.
3. For Frequency 9kHz~30MHz: Distance extrapolation factor =40log(Specific distance/ test distance)(dB); Limit line=Specific limits(dBuV) + distance extrapolation factor.
For Frequency above 30MHz: Distance extrapolation factor =20log(Specific distance/ test distance)(dB);
Limit line=Specific limits(dBuV) + distance extrapolation factor.

7.2.3 Measuring Instruments

The Measuring equipment is listed in the section 6.3 of this test report.

7.2.4 Test Configuration

(a) For radiated emissions below 30MHz

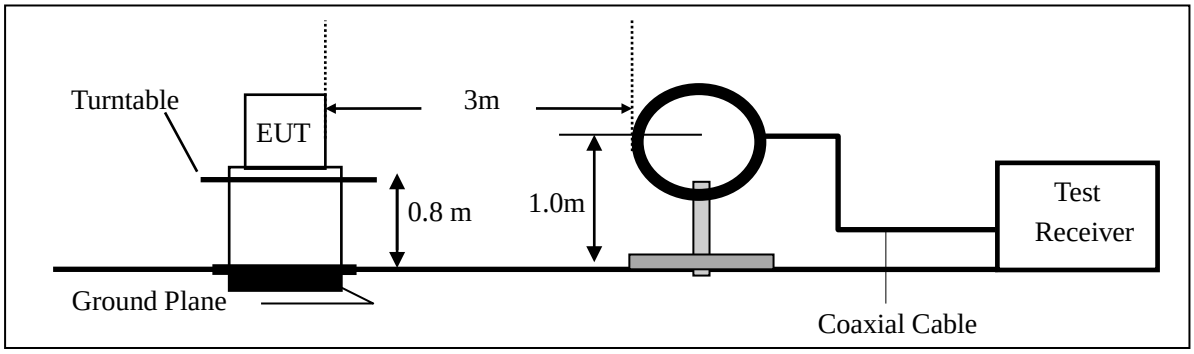

(b) For radiated emissions from 30MHz to 1000MHz

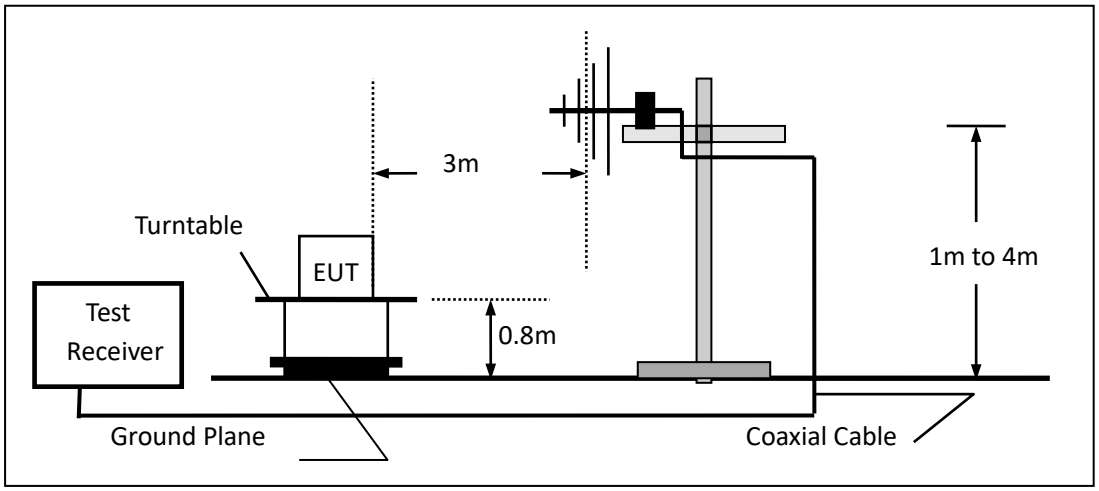

(c) For radiated emissions above 1000MHz

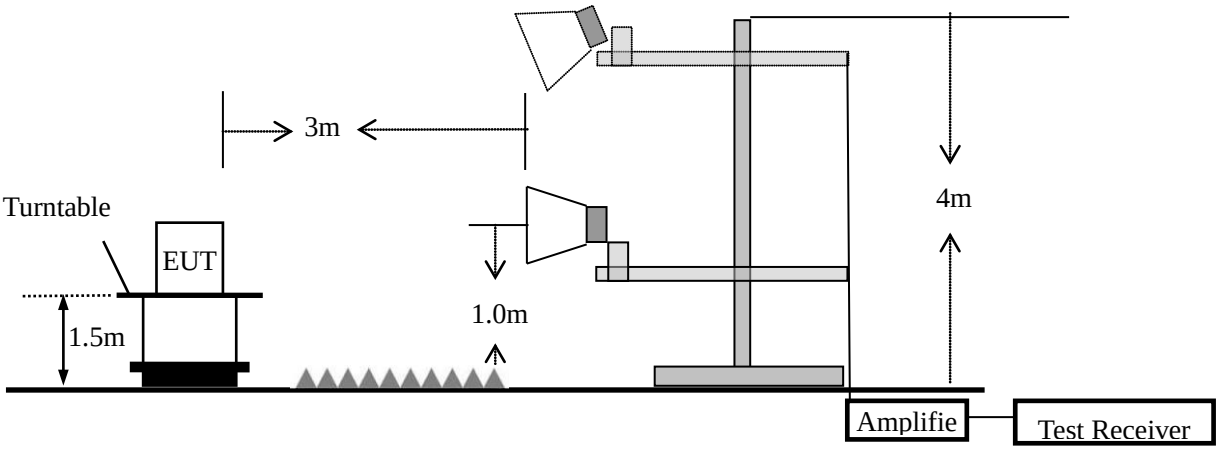

7.2.5 Test Procedure

The test site semi-anechoic chamber has met the requirement of NSA tolerance 4 dB according to the standards: ANSI C63.10-2020. The test distance is 3m.The setup is according to the requirements in Section 13.1.4.1 of ANSI C63.10-2020 and CAN/CSA-CEI/IEC CISPR 22.
This test is required for any spurious emission that falls in a Restricted Band, as defined in Section 15.205. It must be performed with the highest gain of each type of antenna proposed for use with the EUT.
Use the following spectrum analyzer settings:

Spectrum Parameter	Setting
Attenuation	Auto
Start Frequency	1000 MHz
Stop Frequency	10th carrier harmonic
RB / VB (emission in restricted band)	1 MHz / 1 MHz for Peak, 1 MHz / 1MHz for Average

Receiver Parameter	Setting
Attenuation	Auto
Start ~ Stop Frequency	9kHz~150kHz / RB 200Hz for QP
Start ~ Stop Frequency	150kHz~30MHz / RB 9kHz for QP
Start ~ Stop Frequency	30MHz~1000MHz / RB 120kHz for QP

a. The measuring distance of at 3 m shall be used for measurements at frequency up to 1GHz. For frequencies above 1GHz, any suitable measuring distance may be used.
b. The EUT was placed on the top of a rotating table 0.8 m for below 1GHz and 1.5m for above 1GHz the ground at a 3 meter. The table was rotated 360 degrees to determine the position of the highest radiation.
c. The height of the equipment or of the substitution antenna shall be 0.8 m for below 1GHz and 1.5m for above 1GHz; the height of the test antenna shall vary between 1 m to 4 m. Both horizontal and vertical polarizations of the antenna are set to make the measurement.
d. For the radiated emission test above 1GHz:
Place the measurement antenna away from each area of the EUT determined to be a source of emissions at the specified measurement distance, while keeping the measurement antenna aimed at the source of emissions at each frequency of significant emissions, with polarization oriented for maximum response. The measurement antenna may have to be higher or lower than the EUT, depending on the radiation pattern of the emission and staying aimed at the emission source for receiving the maximum signal. The final measurement antenna elevation shall be that which maximizes the emissions. The measurement antenna elevation for maximum emissions shall be restricted to a range of heights of from 1 m to 4 m above the ground or reference ground plane.
e. The initial step in collecting conducted emission data is a spectrum analyzer peak detector mode pre-scanning the measurement frequency range. Significant peaks are then marked and then Quasi Peak detector mode re-measured.
f. If the Peak Mode measured value compliance with and lower than Quasi Peak Mode Limit, the EUT shall be deemed to meet QP Limits and then no additional QP Mode measurement performed.
g. For the actual test configuration, please refer to the related Item –EUT Test Photos.

Note:

Both horizontal and vertical antenna polarities were tested
and performed pretest to three orthogonal axis. The worst case emissions were reported

During the radiated emission test, the Spectrum Analyzer was set with the following configurations:

Frequency Band (MHz)	Function	Resolution bandwidth	Video Bandwidth
30 to 1000	QP	120 kHz	300 kHz
Above 1000	Peak	1 MHz	1 MHz
	Average	1 MHz	1 MHz

Note: for the frequency ranges below 30 MHz, a narrower RBW is used for these ranges but the measured value should add a RBW correction factor (RBWCF) where RBWCF [dB] =10*lg(100 [kHz]/narrower RBW [kHz]). , the narrower RBW is 1 kHz and RBWCF is 20 dB for the frequency 9 kHz to 150 kHz, and the narrower RBW is 10 kHz and RBWCF is 10 dB for the frequency 150 kHz to 30 MHz.

7.2.6 **Test Results**

■ Spurious Emission below 30MHz (9KHz to 30MHz)

EUT:	LUTEA	Model No.:	2-BAND-100
Temperature:	20 ℃	Relative Humidity:	48%
Test Mode:	Mode1/Mode2/Mode3/ Mode4	Test By:	Mary Hu

Freq. (MHz)	Ant.Pol. H/V	Emission Level(dBuV/m)		Limit 3m(dBuV/m)		Over(dB)	
		PK	AV	PK	AV	PK	AV
--	--	--	--	--	--	--	--

Note: the amplitude of spurious emission that is attenuated by more than 20dB below the permissible limit has no need to be reported.

■ Spurious Emission below 1GHz (30MHz to 1GHz)
All the modulation modes have been tested, and the worst result was report as below:

EUT:	LUTEA	Model Name :	2-BAND-100
Temperature:	26.6 ℃	Relative Humidity:	59%
Pressure:	1010hPa	Test Mode:	Mode 3 (1Mbps)
Test Voltage :	DC 3.7V		

Polar (H/V)	Frequency (MHz)	Meter Reading (dBuV)	Factor (dB)	Emission Level (dBuV/m)	Limits (dBuV/m)	Margin (dB)	Remark
V	61.5618	7.83	18.75	26.58	40.00	-13.42	QP
V	131.7577	12.87	14.87	27.74	43.50	-15.76	QP
V	183.8440	10.28	16.83	27.11	43.50	-16.39	QP
V	566.6221	6.53	25.48	32.01	46.00	-13.99	QP
V	724.2610	6.68	28.21	34.89	46.00	-11.11	QP
V	893.8566	7.09	30.50	37.59	46.00	-8.41	QP

Remark:
Emission Level= Meter Reading+ Factor, Margin= Emission Level - Limit

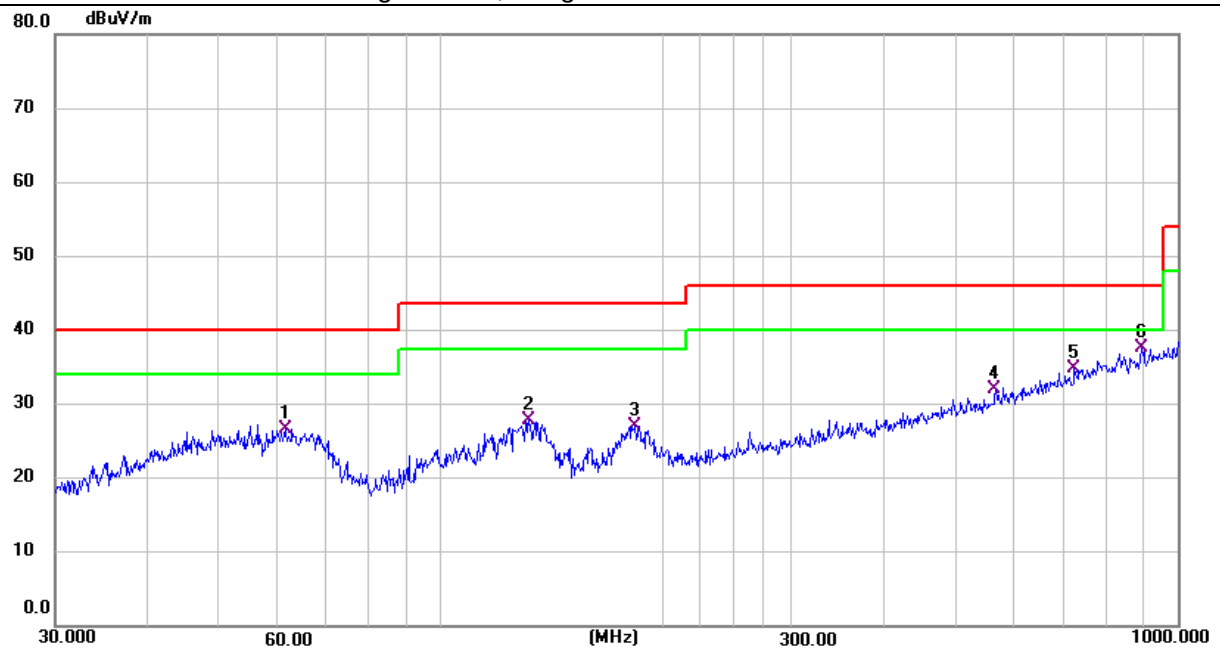

Polar (H/V)	Frequency (MHz)	Meter Reading (dBuV)	Factor (dB)	Emission Level (dBuV/m)	Limits (dBuV/m)	Margin (dB)	Remark
H	57.1914	7.50	19.07	26.57	40.00	-13.43	QP
H	110.5686	6.37	17.92	24.29	43.50	-19.21	QP
H	425.0280	6.50	23.34	29.84	46.00	-16.16	QP
H	597.2234	7.19	26.07	33.26	46.00	-12.74	QP
H	701.7610	6.64	27.97	34.61	46.00	-11.39	QP
H	945.4400	5.43	30.76	36.19	46.00	-9.81	QP

Remark:
Emission Level= Meter Reading+ Factor, Margin= Emission Level - Limit

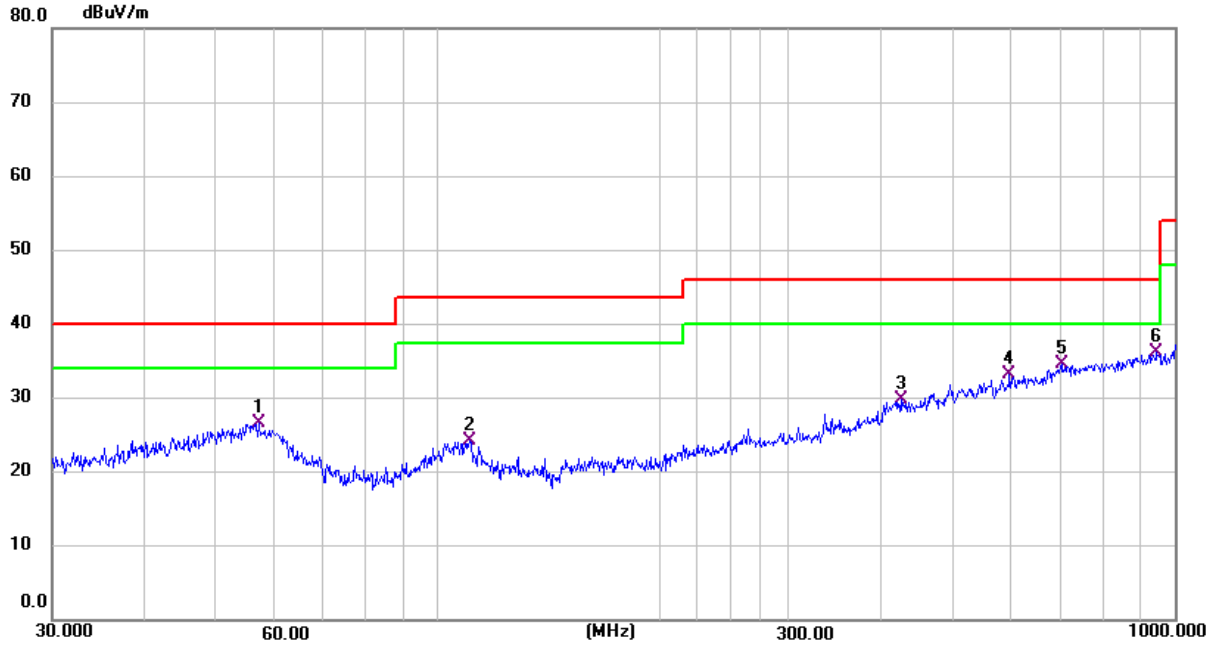

■ Spurious Emission Above 1GHz (1GHz to 25GHz)

EUT:	LUTEA	Model No.:	2-BAND-100
Temperature:	20 ℃	Relative Humidity:	48%
Test Mode:	Mode2/Mode3/Mode4	Test By:	Mary Hu

Frequency	Read Level	Cable loss	Antenna Factor	Preamp Factor	Emission Level	Limits	Margin	Remark	Comment
(MHz)	(dBμV)	(dB)	dB/m	(dB)	(dBμV/m)	(dBμV/m)	(dB)		
Low Channel (2402 MHz)(GFSK)--Above 1G									
4804.68	64.34	5.21	35.59	44.30	60.84	74.00	-13.16	Pk	Vertical
4804.68	52.40	5.21	35.59	44.30	48.90	54.00	-5.10	AV	Vertical
7206.06	66.28	6.48	36.27	44.60	64.43	74.00	-9.57	Pk	Vertical
7206.06	50.92	6.48	36.27	44.60	49.07	54.00	-4.93	AV	Vertical
4804.46	64.69	5.21	35.55	44.30	61.15	74.00	-12.85	Pk	Horizontal
4804.46	50.71	5.21	35.55	44.30	47.17	54.00	-6.83	AV	Horizontal
7206.30	68.14	6.48	36.27	44.52	66.37	74.00	-7.63	Pk	Horizontal
7206.30	50.06	6.48	36.27	44.52	48.29	54.00	-5.71	AV	Horizontal
Mid Channel (2440 MHz)(GFSK)--Above 1G									
4880.18	64.22	5.21	35.66	44.20	60.89	74.00	-13.11	Pk	Vertical
4880.18	51.06	5.21	35.66	44.20	47.73	54.00	-6.27	AV	Vertical
7320.40	66.43	7.10	36.50	44.43	65.60	74.00	-8.40	Pk	Vertical
7320.40	51.67	7.10	36.50	44.43	50.84	54.00	-3.16	AV	Vertical
4880.21	66.61	5.21	35.66	44.20	63.28	74.00	-10.72	Pk	Horizontal
4880.21	50.59	5.21	35.66	44.20	47.26	54.00	-6.74	AV	Horizontal
7320.61	66.24	7.10	36.50	44.43	65.41	74.00	-8.59	Pk	Horizontal
7320.61	50.56	7.10	36.50	44.43	49.73	54.00	-4.27	AV	Horizontal
High Channel (2480 MHz)(GFSK)-- Above 1G									
4960.51	68.68	5.21	35.66	44.20	65.35	74.00	-8.65	Pk	Vertical
4960.51	50.70	5.21	35.66	44.20	47.37	54.00	-6.63	AV	Vertical
7440.22	68.24	7.10	36.50	44.43	67.41	74.00	-6.59	Pk	Vertical
7440.22	50.99	7.10	36.50	44.43	50.16	54.00	-3.84	AV	Vertical
4960.99	66.96	5.21	35.66	44.20	63.63	74.00	-10.37	Pk	Horizontal
4960.99	51.06	5.21	35.66	44.20	47.73	54.00	-6.27	AV	Horizontal
7440.78	66.12	7.10	36.50	44.43	65.29	74.00	-8.71	Pk	Horizontal
7440.78	50.24	7.10	36.50	44.43	49.41	54.00	-4.59	AV	Horizontal

Note:

(1) Emission Level= Antenna Factor + Cable Loss + Read Level - Preamp Factor
(2)All other emissions more than 20dB below the limit.
(3)Only the worst data is recorded in the report, the data rates (1Mbps for GFSK modulation) test result is the worst

■ Spurious Emission in Restricted Band 2310-2390MHz and 2483.5-2500MHz

EUT:	LUTEA	Model No.:	2-BAND-100
Temperature:	20 ℃	Relative Humidity:	48%
Test Mode:	Mode2/ Mode4	Test By:	Mary Hu

Frequency	Meter Reading	Cable Loss	Antenna Factor	Preamp Factor	Emission Level	Limits	Margin	Detector	Comment
(MHz)	(dBμV)	(dB)	dB/m	(dB)	(dBμV/m)	(dBμV/m)	(dB)	Type	
2402 MHz									
2310.00	68.51	2.97	27.80	43.80	55.48	74.00	-18.52	Pk	Horizontal
2310.00	44.03	2.97	27.80	43.80	31.00	54.00	-23.00	AV	Horizontal
2310.00	67.44	2.97	27.80	43.80	54.41	74.00	-19.59	Pk	Vertical
2310.00	46.23	2.97	27.80	43.80	33.20	54.00	-20.80	AV	Vertical
2390.00	65.35	3.14	27.21	43.80	51.90	74.00	-22.10	Pk	Vertical
2390.00	45.96	3.14	27.21	43.80	32.51	54.00	-21.49	AV	Vertical
2390.00	68.53	3.14	27.21	43.80	55.08	74.00	-18.92	Pk	Horizontal
2390.00	45.11	3.14	27.21	43.80	31.66	54.00	-22.34	AV	Horizontal
2480MHz									
2483.50	68.83	3.58	27.70	44.00	56.11	74.00	-17.89	Pk	Vertical
2483.50	45.89	3.58	27.70	44.00	33.17	54.00	-20.83	AV	Vertical
2483.50	67.35	3.58	27.70	44.00	54.63	74.00	-19.37	Pk	Horizontal
2483.50	45.82	3.58	27.70	44.00	33.10	54.00	-20.90	AV	Horizontal
2500.00	65.13	5.90	27.70	44.00	54.73	74.00	-19.27	Pk	Vertical
2500.00	46.67	5.90	27.70	44.00	36.27	54.00	-17.73	AV	Vertical
2500.00	67.38	5.90	27.70	44.00	56.98	74.00	-17.02	Pk	Horizontal
2500.00	44.45	5.90	27.70	44.00	34.05	54.00	-19.95	AV	Horizontal

Note: (1) All other emissions more than 20dB below the limit.
(2)Only the worst data is recorded in the report, the data rates (1Mbps for GFSK modulation) test result is the worst

■ Spurious Emission in Restricted Band 3260MHz-18000MHz

EUT:	LUTEA	Model No.:	2-BAND-100
Temperature:	20 ℃	Relative Humidity:	48%
Test Mode:	Mode2/ Mode4	Test By:	Mary Hu

Frequency	Reading Level	Cable Loss	Antenna Factor	Preamp Factor	Emission Level	Limits	Margin	Detector	Comment
(MHz)	(dBμV)	(dB)	dB/m	(dB)	(dBμV/m)	(dBμV/m)	(dB)	Type	
3260	68.22	4.04	29.57	44.70	57.13	74.00	-16.87	Pk	Vertical
3260	44.39	4.04	29.57	44.70	33.30	54.00	-20.70	AV	Vertical
3260	65.61	4.04	29.57	44.70	54.52	74.00	-19.48	Pk	Horizontal
3260	45.40	4.04	29.57	44.70	34.31	54.00	-19.69	AV	Horizontal
3332	64.81	4.26	29.87	44.40	54.54	74.00	-19.46	Pk	Vertical
3332	45.53	4.26	29.87	44.40	35.26	54.00	-18.74	AV	Vertical
3332	67.29	4.26	29.87	44.40	57.02	74.00	-16.98	Pk	Horizontal
3332	44.04	4.26	29.87	44.40	33.77	54.00	-20.23	AV	Horizontal
17797	53.82	10.99	43.95	43.50	65.26	74.00	-8.74	Pk	Vertical
17797	34.97	10.99	43.95	43.50	46.41	54.00	-7.59	AV	Vertical
17788	52.10	11.81	43.69	44.60	63.00	74.00	-11.00	Pk	Horizontal
17788	35.36	11.81	43.69	44.60	46.26	54.00	-7.74	AV	Horizontal

Note: (1) All other emissions more than 20dB below the limit.
(2) Only the worst data is recorded in the report, the data rates (1Mbps for GFSK modulation) test result is the worst

7.3 6DB BANDWIDTH

7.3.1 Applicable Standard

According to FCC Part 15.247(a)(2) and KDB 558074 D01 15.247 Meas Guidance v05r02 Section 8.2.

7.3.2 Conformance Limit

The minimum permissible 6dB bandwidth is 500 kHz.

7.3.3 Measuring Instruments

The Measuring equipment is listed in the section 6.3 of this test report.

7.3.4 Test Setup

Please refer to Section 6.1 of this test report.

7.3.5 Test Procedure

The testing follows Subclause 11.8 of ANSI C63.10
The RF output of EUT was connected to the spectrum analyzer by RF cable and attenuator.
The path loss was compensated to the results for each measurement.
Set to the maximum power setting and enable the EUT transmit continuously.
The EUT was operating in controlled its channel.
Use the following spectrum analyzer settings:

a) Set RBW = 100 kHz.
b) Set the video bandwidth (VBW) ≥ 3*RBW.
c) Detector = Peak.
d) Trace mode = max hold.
e) Sweep = auto couple.
f) Allow the trace to stabilize.
g) Measure the maximum width of the emission that is constrained by the frequencies associated with the two outermost amplitude points (upper and lower frequencies) that are attenuated by 6 dB relative to the maximum level measured in the fundamental emission.

7.3.6 Test Results

EUT:	LUTEA	Model No.:	2-BAND-100
Temperature:	20 ℃	Relative Humidity:	48%
Test Mode:	Mode2/Mode3/Mode4	Test By:	Mary Hu

Test data reference attachment.

7.4 DUTY CYCLE

7.4.1 Applicable Standard

According to KDB 558074 D01 15.247 Meas Guidance v05r02s Section 6.

7.4.2 Conformance Limit

No limit requirement.

7.4.3 Measuring Instruments

The Measuring equipment is listed in the section 6.3 of this test report.

7.4.4 Test Setup

Please refer to Section 6.1 of this test report.

7.4.5 Test Procedure

The zero-span mode on a spectrum analyzer or EMI receiver if the response time and spacing between bins on the sweep are sufficient to permit accurate measurements of the on and off times of the transmitted signal. Set the center frequency of the instrument to the center frequency of the transmission. Set RBW ≥ OBW if possible; otherwise, set RBW to the largest available value. Set VBW ≥ RBW. Set detector = peak or average. The zero-span measurement method shall not be used unless both RBW and VBW are > 50/T and the number of sweep points across duration T exceeds 100. (For example, if VBW and/or RBW are limited to 3 MHz, then the zero-span method of measuring duty cycle shall not be used if T ≤ 16.7 microseconds.)

The transmitter output is connected to the Spectrum Analyzer. We tested accroding to the zero-span measurement method, 6.0)b) in KDB 558074

The largest availble value of RBW is 8 MHz and VBW is 50 MHz. The zero-span method of measuring duty cycle shall not be used if T ≤ 6.25 microseconds. (50/6.25 = 8)

The zero-span method was used because all measured T data are > 6.25 microseconds and both RBW and VBW are > 50/T.

The RF output of EUT was connected to the spectrum analyzer by RF cable and attenuator.
The path loss was compensated to the results for each measurement.
Set to the maximum power setting and enable the EUT transmit continuously.
The EUT was operating in controlled its channel.
Use the following spectrum analyzer settings:
Span = Zero Span
RBW = 8MHz(the largest available value)
VBW = 8MHz (≥ RBW)
Number of points in Sweep >100
Detector function = peak
Trace = Clear write
Measure T_{total} and T_{on}
Calculate Duty Cycle = T_{on} / T_{total}

7.4.6 **Test Results**

EUT:	LUTEA	Model No.:	2-BAND-100
Temperature:	20 ℃	Relative Humidity:	48%
Test Mode:	Mode2/Mode3/Mode4	Test By:	Mary Hu

Test data reference attachment.

7.5 PEAK OUTPUT POWER

7.5.1 Applicable Standard

According to FCC Part 15.247(b)(3) and KDB 558074 D01 15.247 Meas Guidance v05r02 Section 8.3.1.

7.5.2 Conformance Limit

The maximum peak conducted output power of the intentional radiator for systems using digital modulation in the 2400 - 2483.5 MHz bands shall not exceed: 1 Watt (30dBm). If transmitting antenna of directional gain greater than 6dBi is used, the peak output power from the intentional radiator shall be reduced below the above stated value by the amount in dB that the directional gain of the antenna exceeds 6 dBi. In case of point-to-point operation, the limit has to be reduced by 1dB for every 3dB that the directional gain of the antenna exceeds 6dBi.

7.5.3 Measuring Instruments

The Measuring equipment is listed in the section 6.3 of this test report.

7.5.4 Test Setup

Please refer to Section 6.1 of this test report.

7.5.5 Test Procedure

The testing follows Subclause 11.9.1.1 of ANSI C63.10
The RF output of EUT was connected to the spectrum analyzer by RF cable and attenuator.
The path loss was compensated to the results for each measurement.
Set to the maximum power setting and enable the EUT transmit continuously.
The EUT was operating in controlled its channel.
Use the following spectrum analyzer settings:

Set the RBW ≧DTS bandwidth.

Set VBW =3*RBW.

Set the span ≧3*RBW

Set Sweep time = auto couple.
Set Detector = peak.
Set Trace mode = max hold.
Allow trace to fully stabilize.
Use peak marker function to determine the peak amplitude level.

7.5.6 Test Results

EUT:	LUTEA	Model No.:	2-BAND-100
Temperature:	20 ℃	Relative Humidity:	48%
Test Mode:	Mode2/Mode3/Mode4	Test By:	Mary Hu

Test data reference attachment.

7.6 POWER SPECTRAL DENSITY

7.6.1 Applicable Standard

According to FCC Part 15.247(e) and KDB 558074 D01 15.247 Meas Guidance v05r02 Section 8.4.

7.6.2 Conformance Limit

The transmitter power spectral density conducted from the transmitter to the antenna shall not be greater than 8 dBm in any 3 kHz band during any time interval of continuous transmission.

7.6.3 Measuring Instruments

The Measuring equipment is listed in the section 6.3 of this test report.

7.6.4 Test Setup

Please refer to Section 6.1 of this test report.

7.6.5 Test Procedure

The testing follows Measurement Procedure Subclause 11.10.2 of ANSI C63.10
This procedure shall be used if maximum peak conducted output power was used to demonstrate compliance, and is optional if the maximum conducted (average) output power was used to demonstrate compliance.

The RF output of EUT was connected to the spectrum analyzer by RF cable and attenuator.
The path loss was compensated to the results for each measurement.
Set to the maximum power setting and enable the EUT transmit continuously.
The EUT was operating in controlled its channel.
a) Set analyzer center frequency to DTS channel center frequency.
b) Set the span to 1.5*DTS bandwidth.
c) Set the RBW to: 3 kHz ≤ RBW ≤ 100 kHz.
d) Set the VBW ≥ 3 RBW.
e) Detector = peak.
f) Sweep time = auto couple.
g) Trace mode = max hold.
h) Allow trace to fully stabilize.
i) Use the peak marker function to determine the maximum amplitude level within the RBW.
j) If measured value exceeds limit, reduce RBW (no less than 3 kHz) and repeat.

7.6.6 **Test Results**

EUT:	LUTEA	Model No.:	2-BAND-100
Temperature:	20 ℃	Relative Humidity:	48%
Test Mode:	Mode2/Mode3/Mode4	Test By:	Mary Hu

Test data reference attachment.

7.7 CONDUCTED BAND EDGE MEASUREMENT

7.7.1 Applicable Standard

According to FCC Part 15.247(d) and KDB 558074 D01 15.247 Meas Guidance v05r02 Section 8.7.

7.7.2 Conformance Limit

In any 100 kHz bandwidth outside the frequency band in which the spread spectrum or digitally modulated intentional radiator is operating, the radio frequency power that is produced by the intentional radiator shall be at least 20 dB below that in the 100 kHz bandwidth within the band that contains the highest level of the desired power, based on either an RF conducted or a radiated measurement, provided the transmitter demonstrates compliance with the peak conducted power limits. If the transmitter complies with the conducted power limits based on the use of RMS averaging over a time interval, as permitted under paragraph (b)(3) of this section, the attenuation required under this paragraph shall be 30 dB instead of 20 dB.

7.7.3 Measuring Instruments

The Measuring equipment is listed in the section 6.3 of this test report.

7.7.4 Test Setup

Please refer to Section 6.1 of this test report.

7.7.5 Test Procedure

The testing follows FCC KDB 558074 D01 15.247 Meas Guidance v05r02 Section 8.7.
The RF output of EUT was connected to the spectrum analyzer by RF cable and attenuator.
The path loss was compensated to the results for each measurement.
Set to the maximum power setting and enable the EUT transmit continuously.
The EUT was operating in controlled its channel.
Set RBW to 100 kHz and VBW of spectrum analyzer to 300 kHz with a convenient frequency span including 100 kHz bandwidth from band edge.
Measure the highest amplitude appearing on spectral display and set it as a reference level. Plot the graph with marking the highest point and edge frequency.
Repeat above procedures until all measured frequencies were complete.

7.7.6 Test Results

EUT:	LUTEA	Model No.:	2-BAND-100
Temperature:	20 ℃	Relative Humidity:	48%
Test Mode:	Mode2/Mode4	Test By:	Mary Hu

Test data reference attachment.

7.8 SPURIOUS RF CONDUCTED EMISSIONS

7.8.1 Conformance Limit

1. Below -20dB of the highest emission level in operating band.
2. Fall in the restricted bands listed in section 15.205. The maximum permitted average field strength is listed in section 15.209.

7.8.2 Measuring Instruments

The Measuring equipment is listed in the section 6.3 of this test report.

7.8.3 Test Setup

Please refer to Section 6.1 of this test report.

7.8.4 Test Procedure

The Spurious RF conducted emissions compliance of RF radiated emission should be measured by following the guidance in ANSI C63.10-2020 with respect to maximizing the emission by rotating the EUT, measuring the emission while the EUT is situated in three orthogonal planes (if appropriate), adjusting the measurement antenna height and polarization etc. Set RBW=100kHz and VBW= 300KHz to measure the peak field strength , and measure frequency range from 30MHz to 26.5GHz.

7.8.5 Test Results

Remark: The measurement frequency range is from 30MHz to the 10th harmonic of the fundamental frequency. The lowest, middle and highest channels are tested to verify the spurious emissions and bandege measurement data.

Test data reference attachment.

7.9 ANTENNA APPLICATION

7.9.1 Antenna Requirement

15.203 requirement: For intentional device, according to 15.203: an intentional radiator shall be designed to ensure that no antenna other than that furnished by the responsible party shall be used with the device.

7.9.2 Result

The EUT antenna is permanent attached PCB Antenna (Gain: 2.82dBi). It comply with the standard requirement.

8 TEST RESULTS

8.1 1M

8.1.1 Duty Cycle

Test Result

Mode	Channel	On Time (ms)	Period (ms)	Duty Cycle (%)	Duty Cycle (linear)	Duty Cycle Factor (dB)	1/T
BLE 1M	0	0.394	0.625	62.99	0.6299	2.0073	2.5381
	19	0.393	0.625	62.97	0.6297	2.0087	2.5445
	39	0.394	0.625	63.02	0.6302	2.0052	2.5381

Test Graphs

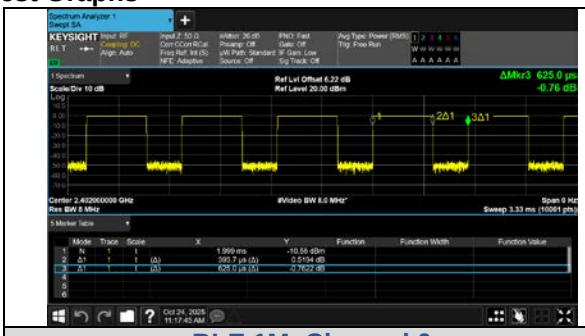

BLE 1M_Channel 0

BLE 1M_Channel 19

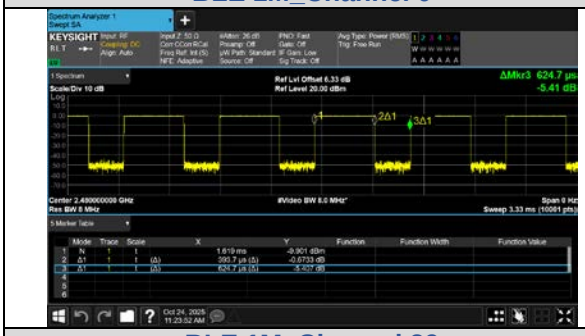

BLE 1M_Channel 39

8.1.2 Conducted Output Power

Test Result

Mode	Channel	Peak Output Power (dBm)	Peak Output Power (mW)	Max. Avg. Power (dBm)	Limit (dBm)	Result
BLE 1M	0	-1.03	0.79	None	≤30	PASS
	19	-0.71	0.85	None	≤30	PASS
	39	-0.73	0.85	None	≤30	PASS

Test Graphs

Peak Output Power
BLE 1M_Channel 0

Peak Output Power
BLE 1M_Channel 19

Peak Output Power
BLE 1M_Channel 39

8.1.3 99% Bandwidth

Test Result

Mode	Channel	Center Frequency (MHz)	99% BW (MHz)
BLE 1M	0	2402	1.0405
BLE 1M	19	2440	1.0416
BLE 1M	39	2480	1.0439

Test Graphs

BLE 1M_Channel 0

BLE 1M_Channel 19

BLE 1M_Channel 39

8.1.4 6dB Bandwidth

Test Result

Mode	Channel	Center Frequency (MHz)	6 dB Bandwidth (MHz)	Limit (MHz)	Result
BLE 1M	0	2402	0.7000	≥0.5	PASS
	19	2440	0.7000		PASS
	39	2480	0.7100		PASS

Test Graphs

BLE 1M_Channel 0

BLE 1M_Channel 19

BLE 1M_Channel 39

8.1.5 Conducted Spurious & Band Edge Emission

Test Result

Mode	Channel	OOB Emission Frequency (MHz)	OOB Emission Level (dBm)	Limit (dBm)	Over Limit (dB)	Result
BLE 1M	0	2400.00	-51.827	-21.12	-30.707	PASS
		4804.26	-52.047	-21.12	-30.927	PASS
	19	1780.40	-51.337	-20.83	-30.507	PASS
	39	2483.50	-53.336	-20.78	-32.556	PASS
		4959.70	-52.001	-20.78	-31.221	PASS

Test Graphs

In-Band Reference Level
BLE 1M_Channel 0

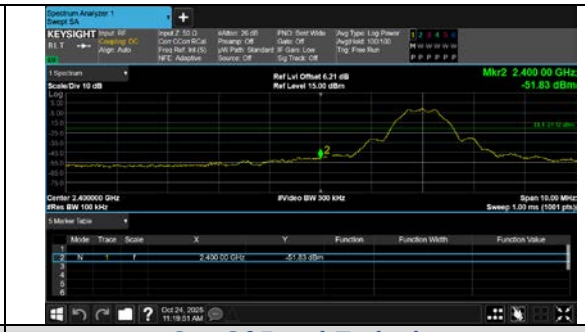

Out Of Band Emission
BLE 1M_Channel 0

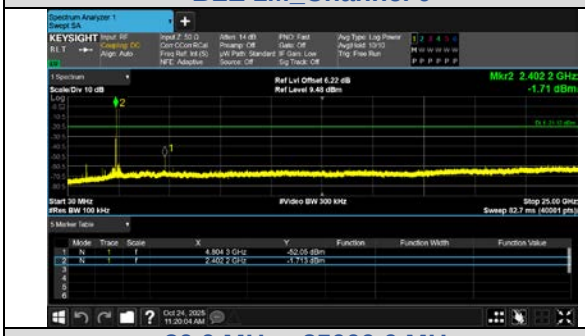

30.0 MHz - 25000.0 MHz
BLE 1M_Channel 0

In-Band Reference Level
BLE 1M_Channel 19

30.0 MHz - 25000.0 MHz
BLE 1M_Channel 19

In-Band Reference Level
BLE 1M_Channel 39

Out Of Band Emission BLE 1M_Channel 39	**30.0 MHz - 25000.0 MHz BLE 1M_Channel 39**

8.1.6 Power Spectral Density

Test Result

Mode	Channel	PSD (dBm/3kHz)	Limit (dBm/3kHz)	Result
BLE 1M	0	-16.250	≤8	PASS
BLE 1M	19	-15.920	≤8	PASS
BLE 1M	39	-15.980	≤8	PASS

Test Graphs

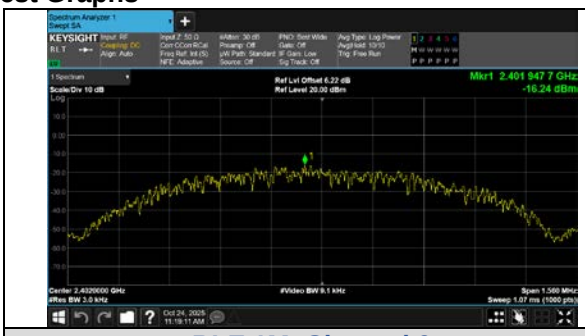

BLE 1M_Channel 0

BLE 1M_Channel 19

BLE 1M_Channel 39

8.2 2M

8.2.1 Duty Cycle

Test Result

Mode	Channel	On Time (ms)	Period (ms)	Duty Cycle (%)	Duty Cycle (linear)	Duty Cycle Factor (dB)	1/T
BLE 2M	0	0.207	0.625	33.19	0.3319	4.7899	4.8309
	19	0.207	0.625	33.19	0.3319	4.7899	4.8309
	39	0.208	0.625	33.24	0.3324	4.7834	4.8077

Test Graphs

BLE 2M_Channel 0

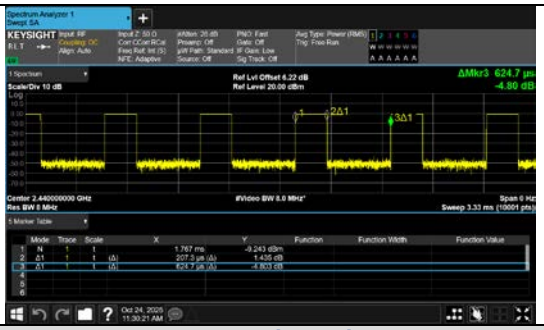

BLE 2M_Channel 19

8.2.2 Conducted Output Power

Mode	Channel	Peak Output Power (dBm)	Peak Output Power (mW)	Max. Avg. Power (dBm)	Limit (dBm)	Result
BLE 2M	0	-1.06	0.78	None	≤30	PASS
	19	-0.74	0.84	None	≤30	PASS
	39	-0.68	0.86	None	≤30	PASS

Test Graphs

Peak Output Power
BLE 2M_Channel 0

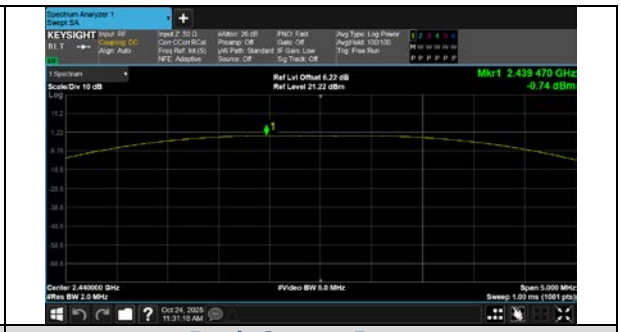

Peak Output Power
BLE 2M_Channel 19

Peak Output Power
BLE 2M_Channel 39

8.2.3 99% Bandwidth

Test Result

Mode	Channel	Center Frequency (MHz)	99% BW (MHz)
BLE 2M	0	2402	2.0387
BLE 2M	19	2440	2.0442
BLE 2M	39	2480	2.0416

Test Graphs

BLE 2M_Channel 0

BLE 2M_Channel 19

BLE 2M_Channel 39

8.2.4 6dB Bandwidth

Test Result

Mode	Channel	Center Frequency (MHz)	6 dB Bandwidth (MHz)	Limit (MHz)	Result
BLE 2M	0	2402	1.130	≥0.5	PASS
	19	2440	1.120		PASS
	39	2480	1.130		PASS

Test Graphs

BLE 2M_Channel 0

BLE 2M_Channel 19

BLE 2M_Channel 39

8.2.5 Conducted Spurious & Band Edge Emission

Test Result

Mode	Channel	OOB Emission Frequency (MHz)	OOB Emission Level (dBm)	Limit (dBm)	Over Limit (dB)	Result
BLE 2M	0	2400.00	-33.148	-21.15	-11.998	PASS
		4804.89	-54.782	-21.15	-33.632	PASS
	19	4879.80	-51.860	-20.84	-31.020	PASS
	39	948.27	-53.830	-20.78	-33.050	PASS
		2483.50	-52.836	-20.78	-32.056	PASS

Test Graphs

In-Band Reference Level
BLE 2M_Channel 0

Out Of Band Emission
BLE 2M_Channel 0

30.0 MHz - 25000.0 MHz
BLE 2M_Channel 0

In-Band Reference Level
BLE 2M_Channel 19

30.0 MHz - 25000.0 MHz
BLE 2M_Channel 19

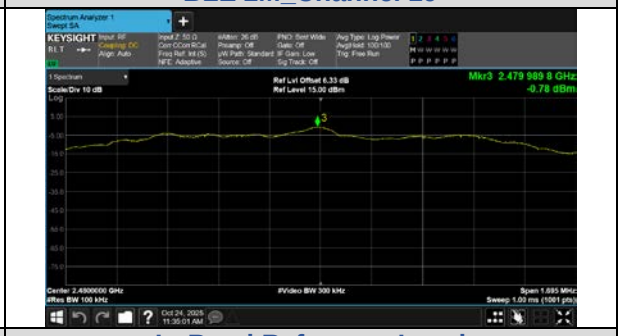

In-Band Reference Level
BLE 2M_Channel 39

Out Of Band Emission BLE 2M_Channel 39	**30.0 MHz - 25000.0 MHz BLE 2M_Channel 39**

8.2.6 Power Spectral Density

Test Result

Mode	Channel	PSD (dBm/3kHz)	Limit (dBm/3kHz)	Result
BLE 2M	0	-18.470	≤8	PASS
BLE 2M	19	-18.230	≤8	PASS
BLE 2M	39	-18.030	≤8	PASS

Test Graphs

BLE 2M_Channel 0

BLE 2M_Channel 19

BLE 2M_Channel 39

END OF REPORT