CloudEnergy

After Sales Service Email: info@cloudnewenergy.com

48(51.2)V LiFePO4
105 Ah

LiFePO4 Lithium Golf Cart Battery

Please Read The Manual Carefully Before Using The Equipment.

www.cloudnewenergy.com info@cloudnewenergy.com

Cloudenergy 51.2V 105Ah LiFePO4 Battery Deep Cycle Rechargeable Battery for Golf Cart

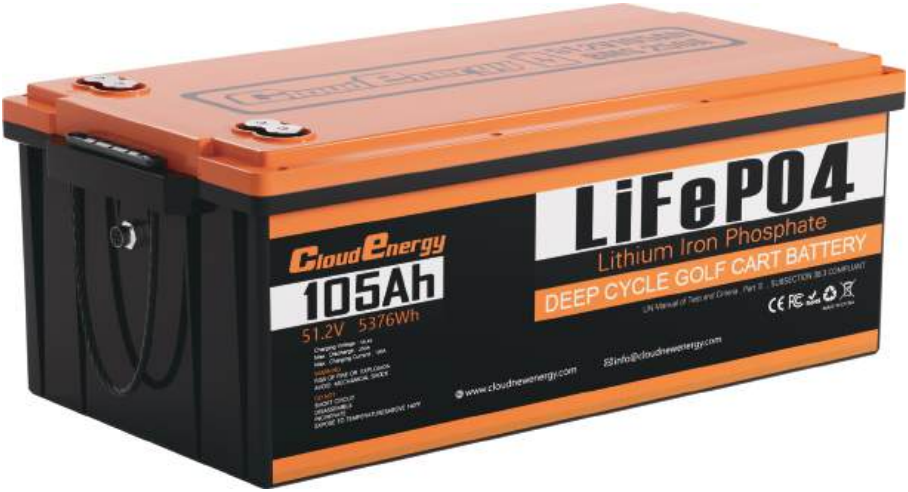

51.2V 105Ah Golf Cart Battery

Cloudenergy 5376Wh LiFePO4 Battery
Perfect For Golf Carts

Home Energy Storage System

Cloudenergy 5376Wh LiFePO4 Battery

Large Capacity Convenient & Practical

Introduction

PRODUCT OVERVIEW

BATTERY

Combination:48V 105Ah
Case Color: Orange+Black
Dimension: L547* W288*H203mm/21.54*11.34*7.99inch

42Kg/92.59 lb

Terminal & Post Bolts

Terminal Size:
M8(1.25mm Metric Thread)

Post Bolts:
M8 (1.25mm Metric Thread*14mm Bolt Length)

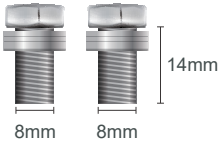

(The bolts can be replaced with M8 bolts of other lengths based on actual needs.)

Equipped With Charger And LCD Display

The Cloudenergy golf cart battery package includes a 58.4V 20A charger and a display that allows you to check the status of the battery in real time!

LCD Screen

GENERAL INFORMATION

Operating Voltage	51.2V
Charging Voltage	58.4±0.75V
Max Continuous Load Power	5120W
Max Continuous Charging/Discharge Current	100A/250A

NOTICE BEFORE USING

STEP 1

CONTACT US at info@cloudnewenergy.com to activate the FIVE-YEAR WARRANTY

STEP 2

PULL OUT Packaging box.

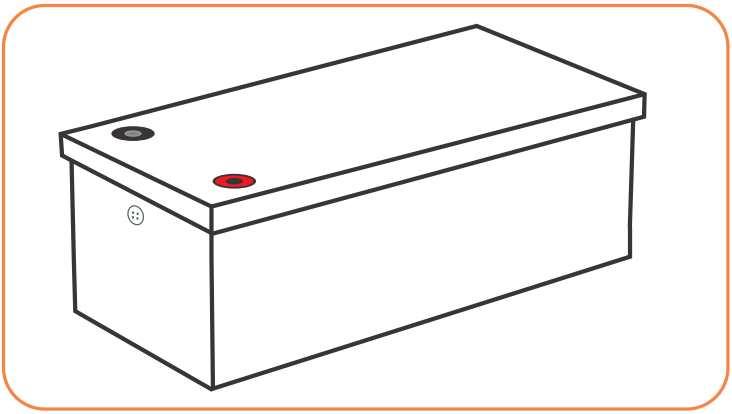

STEP 3

TEST The Battery Voltage with Multimeter

≥48V To Step 4

<48V Contact us at info@cloudnewenergy.com to help solve the problem.

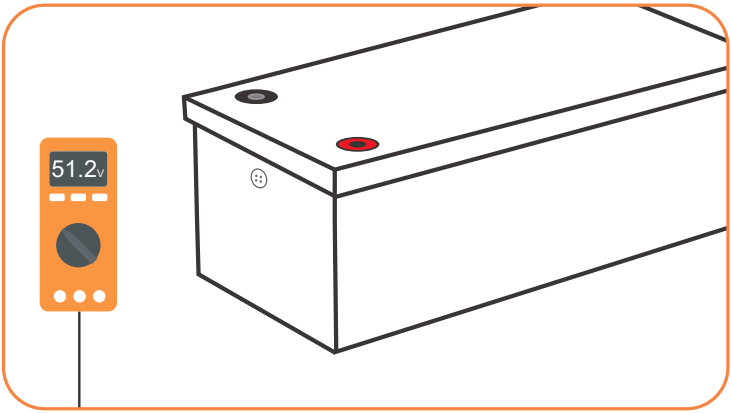

STEP
4

FULLY CHARGE The Battery Separately

Refer to Page 04 for battery charging methods

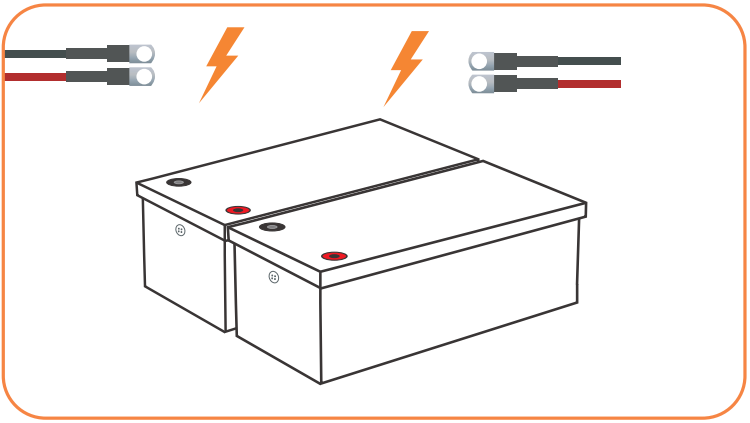

STEP
5

CONNECT To Use

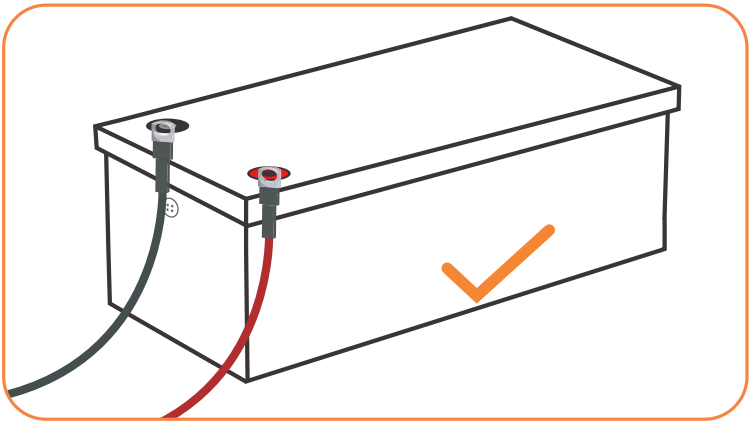

STEP
6

CONNECT THE LCD DISPLAY To Check Battery Status

The battery status can be checked in real time by connecting the display with the equipped RS485 cable.

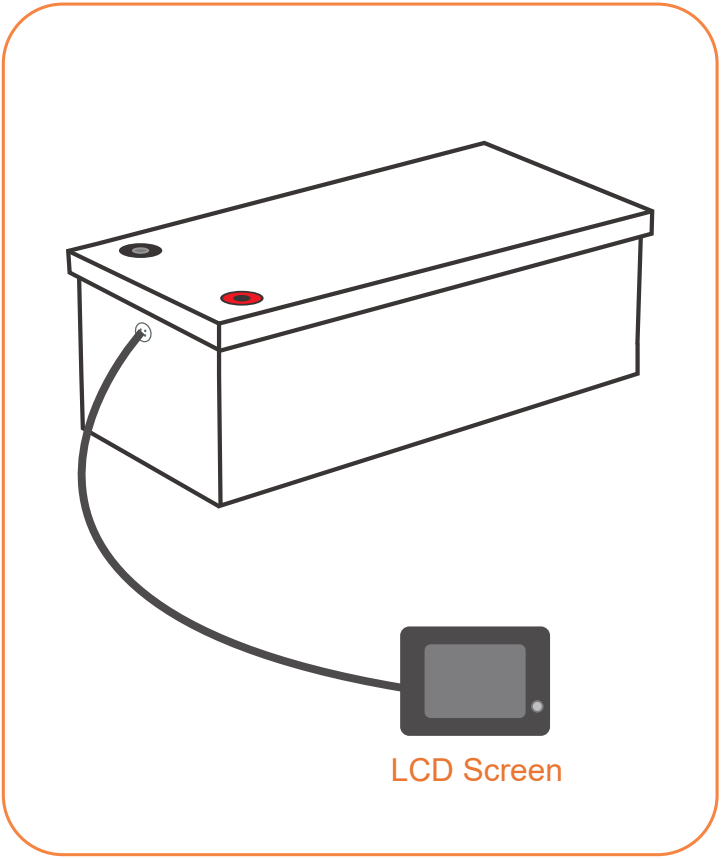

HOW TO INSTALL BLUETOOTH FUNCTION

If there is a need you can contact our after-sales service email: info@cloudnewenergy.com

Download applications by scanning code on your phone,or in the application market, search for xiaoxiangdiandong.

After connecting to the battery, you can check the battery information

CONTENTS

BATTERY PARAMETERS

page 01

THINGS TO KNOW BEFORE USING

page 03

Long Term Storage 03

CHARGING METHODS

page 04

Background Information

The Voltage When Charging & Discharging 04

Battery Charging Logic 05

- LiFePO4 Battery Charging Mode
- Lead Acid Battery Charging Mode

Method I

Solar Panel(s) & Controller 07

- Solar Panel
- Controller
- Controller Settings

Method II

Battery Charger 08

Method III

Alternator / Generator 08

HOW TO ESTIMATE THE BATTERY CAPACITY page 09

State of Charge (SOC) 09

PARALLEL CONNECTION page 10

The Premise of Connection 10

Limitation for Series/Parallel Connection 10

How to Connect Batteries 11

- Step 1 Wear Insulating Gloves
- Step 2 Voltage Balancing Before Connection
- Step 3 Total Input & Output Connection
- Step 4 Rebalancing Every Six Months

INVERTER SETTINGS page 17

WHAT TO DO WHEN THE BATTERY STOPS WORKING? page 18

BATTERY-PACK MAIN PARAMETERS

Cell	Prismatic LiFePO4 Battery
Nominal Capacity	105Ah
Usable Capacity	105Ah
Nominal Voltage	51.2V
Energy	5376Wh
Charge Method	CC/CV
Charge Voltage	58.4V±0.75V
Max. Charge Current	100A

Battery Management System (BMS) Board	250A
Max. Continuous Charge / Discharge Current ①	100A/250A
Max. Discharge Current 1 Seconds	400A
Max. Continuous Load Power ②	12.8KW

① The maximum continuous current that the battery can withstand.
② The maximum continuous output power that the battery can support.

Internal Impedance	⩽40mΩ
Battery Pack Case	Steel Plate Cold Common (SPCC)
Dimension	L21.54*W11.34*H7.99inch
	L547*W288*H203 mm
Temperature Range	Charge: 0°C to 50°C / 32°F to 122°F
	Discharge: -20°C to 60°C / -4°F to 140°F
	Storage: -10°C to 50°C / 14°F to 122°F

THINGS TO KNOW BEFORE USING

Please take care to avoid metal or conductive objects touching the positive and negative terminals of the battery at the same time during your operation, otherwise it is likely to cause a short circuit.

DO NOT install the battery sideways or with the top down. If ou are not sure about the installation direction,please contact to confirm the direction.

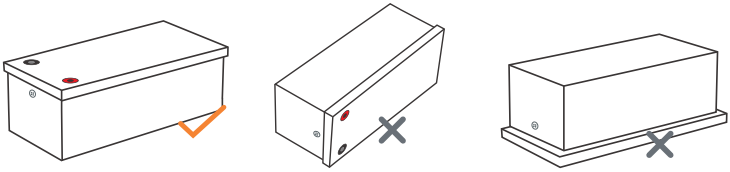

Tightly screw in the post bolts. Having loose battery terminals will cause the terminals to build up heat resulting in damage to the battery.

This battery is not intended to be used to start any devices,please **DO NOT use it as a starting battery.**

Suggestions for Long-term Storage:

- **Temperature**
  The battery can be operated at a temperature of -20°C to 60°C /-4°F to 140°F, and a temperature between **10°C to 35°C/50°F to 95°F** is ideal for long-term storage. Store in a fireproof container and away from children.
- **Capacity**
  For a longer-lasting product, it is best to store your battery **at a 50% charge level** and recharge every three months if it is not going to be used for a long time.

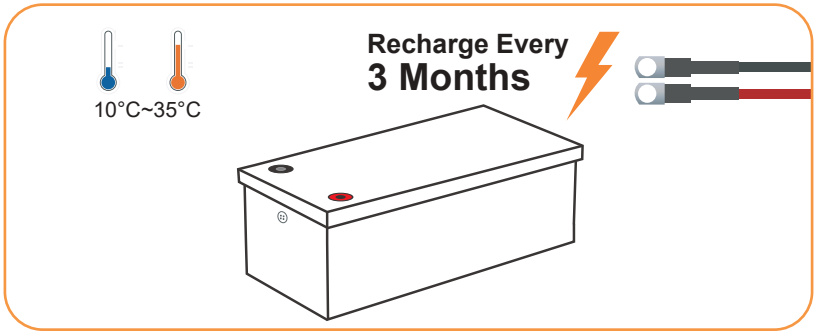

CHARGING METHODS

THE VOLTAGE WHEN CHARGING & DISCHARGING

Based on the characteristics of Lithium Iron Phosphate (LiFePO4) batteries, the voltage measured by all LiFePO4 batteries during charging/discharging is not the real voltage of the battery. Therefore, after charging/discharging and disconnecting the battery from the power source, the voltage of the battery will gradually drop/increase to its real voltage.
If you need to test the real voltage of the battery, please disconnect all the connections to the battery and test its voltage after putting it aside for over 30 mins.

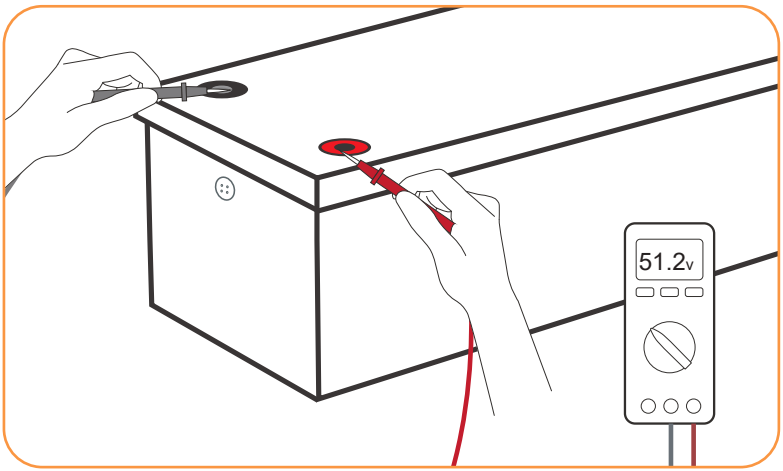

Tips When Testing The Battery Voltage by A Multimeter

①Put the red probe (+) tightly on the tightly screwed positive post bolt, and the black probe (-) on the tightly screwed negative post bolt.
②Do not touch the metal part of the probes with your hands during use.

BATTERY CHARGING LOGIC

The material characteristics of the LiFePO4 battery determine that its charging curve is obviously different from that of a lead-acid battery. Compared with a lead-acid battery, the LiFePO4 battery has a simpler charging process and mode. Therefore, it is recommended to select LiFePO4 for your charging mode.

If LiFePO4 mode is not available, please refer to the recommended parameters on Page 07~08 for setting.

LiFePO4 Battery Charging Mode

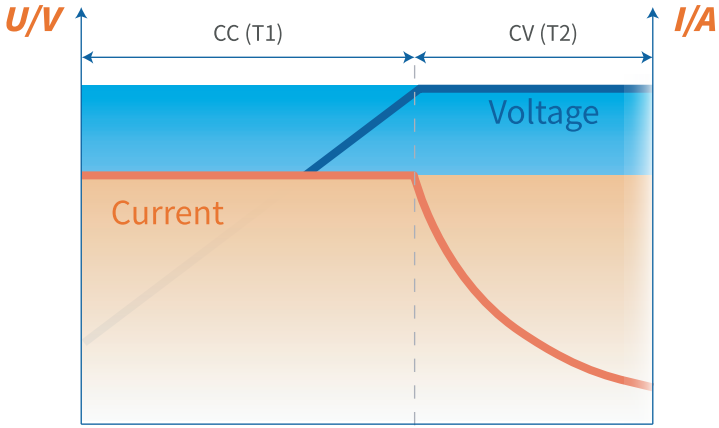

LiFePO4 Battery Charging Curve

CC (Constant Current) Phase(T1)

In the beginning, a discharged battery will be charged with a constant current and voltage will be climbing steadily until reaching the constant voltage setpoint which varies for different charging methods.

CV(Constant Voltage) Phase(T2)

The battery maintains a constant voltage during this phase while the current gradually decreases to 2A (0.02C)which is also known as tail current①. At this point, the charging is cut off and the battery is fully charged.

① Tail Current(A)= Battery Capacity*0.02C.E.g.,100Ah*0.02C= 2A tail current.

Lead Acid Battery Charging Mode

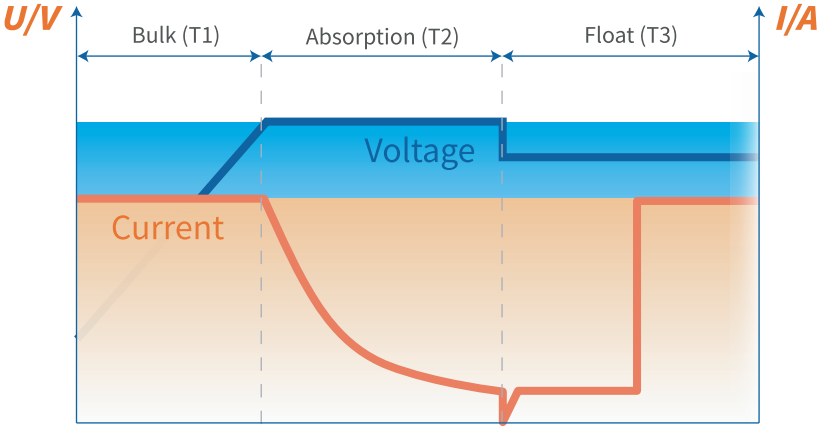

Lead Acid Battery Charging Curve

Bulk/ Boost Phase(T1)

In the beginning, a discharged battery will be charged with maximum current and voltage will be climbing steadily until reaching the absorption voltage setpoint.

(This phase is basically equivalent to the CC phase of LiFePO4 battery charging.)

Absorption Phase(T2)

The battery reaches the absorption voltage setpoint and holds the voltage constant while the current gradually decreases until the battery is becoming full (within10-20%). Generally, absorption will not exceed 3 hours to prevent overcharging.

(This phase is basically equivalent to the CV phase of LiFePO4 battery charging.)

Float Phase (T3)

After the absorption stage, the voltage of the battery will reduce to the float voltage setpoint and the current will also reduce to a low maintenance mode to prevent the battery from discharging and offsetting any self-discharge. Heavier battery discharge may set the controller back to Bulk/Boost or Absorption to replenish energy lost while energy is available.

(LiFePO4 battery does not have this charging phase.)

SOLAR PANEL(S) & CONTROLLER

Solar Panel

☆ Recommend Power: ≥1200W

- The battery can be fully charged in one day (with effective sunshine 4.5hrs/day) by 1200W solar panels.
- It may take more than one day to fully charge the battery by 1200W solar panels since the duration and intensity of light would be a great factor for their charging efficiency.

Controller

☆ Recommend Charging Current:

20A(0.2C)	The battery will be fully charged in around 5hrs to 100% capacity.
50A(0.5C)	The battery will be fully charged in around 2hrs to around 97% capacity.

☆ Recommend Charging Mode: 51.2(58.4V) 20Ah (LiFePO4)

Controller Settings

Refer to the below parameters if you need to manually set up your controller. As different types of batteries have different charging modes (refer to Page 04-05), it is recommended to set only the following parameters for LiFePO4 batteries. The settings for other types of batteries do not apply to LiFePO4 batteries except for the following settings.

CHARGING	Charge /Bulk /Boost Voltage	58.2V/58.4V
	Absorption Voltage	58.2V/58.4V
	Over Voltage Disconnect	59.2V
	Over Voltage Reconnect	54.4V
	Tail Current	2A(0.02C)
DISCHARGING	Under Voltage Warning	46.4V
	Under Voltage Recover	48V
	Low Voltage Disconnect	43.2V
	Low Voltage Reconnect	49.6V

BATTERY CHARGER

Use 58.4V lithium iron phosphate (LiFePO4) battery charger to maximize the capacity.

☆ Recommend Charging Voltage: Between 58.2V to 58.4V

☆ Recommend Charging Current:

20A(0.2C)	The battery will be fully charged in around 5hrs to 100% capacity.
50A(0.5C)	The battery will be fully charged in around 2hrs to around 97% capacity.

Tips

① Connect the charger to the battery before connecting it to the grid power in case of sparks.

②It's recommended to disconnect the charger from the battery after fully charging.

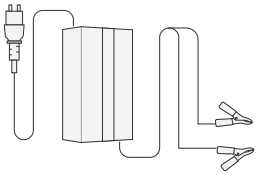

ALTERNATOR/ GENERATOR

Cloudenergy battery can be charged by an alternator or generator.

If the alternator/generator supports DC output, a DC-to-DC charger needs to be added between the battery and the generator; if the alternator/generator supports AC output,please refer to the recommendations in "Battery Charger" above to add a suitable battery charger between the battery and the generator.

☆ Recommend Charging Voltage: Between 58.0V to 58.0V

☆ Recommend Charging Current:

20A(0.2C)	The battery will be fully charged in around 5hrs to 100% capacity.
50A(0.5C)	The battery will be fully charged in around 2hrs to around 97% capacity.

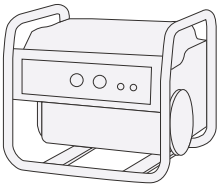

HOW TO ESTIMATE THE BATTERY CAPACITY

STATE OF CHARGE (SOC)

The battery capacity could be roughly estimated by its rest voltage (not charging/discharging voltage). As there are subtle differences in the voltage of each battery, the below parameters are for reference only.

Rest Voltage: The voltage needs to be tested at rest (with zero current) after 30 mins of disconnecting from the charger & loads.

CAPACITY	CHARGE VOLTAGE
100%	53.8V
99%	53V
90%	52.5V
70%	52V
40%	51V
30%	50V
20%	49V
10%	47V
1%	43V (recommend low voltage disconnect voltage)
0%	42V

PARALLEL CONNECTION

THE PREMISE OF CONNECTION

To connect in parallel, batteries should meet the below conditions:

a. identical batteries with the same battery capacity (Ah) and BMS (A);

b. from the same brand (as lithium battery from different brands has their special BMS);

c. purchased in near time (within one month).

LIMITATION FOR SERIES/PARALLEL CONNECTION

Support connecting up to 16 identical batteries in parallel for up to: 51.2V 420Ah battery system.

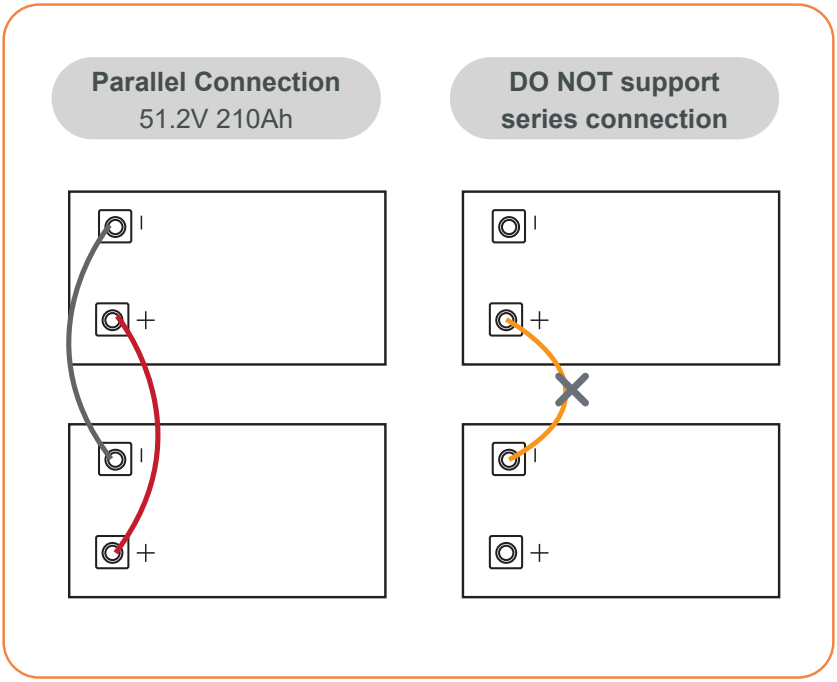

HOW TO CONNECT BATTERIES

Step1 Wear Insulating Gloves

Wear Insulating Gloves for protection before connecting. Please pay attention to operation safety in the process of connection.

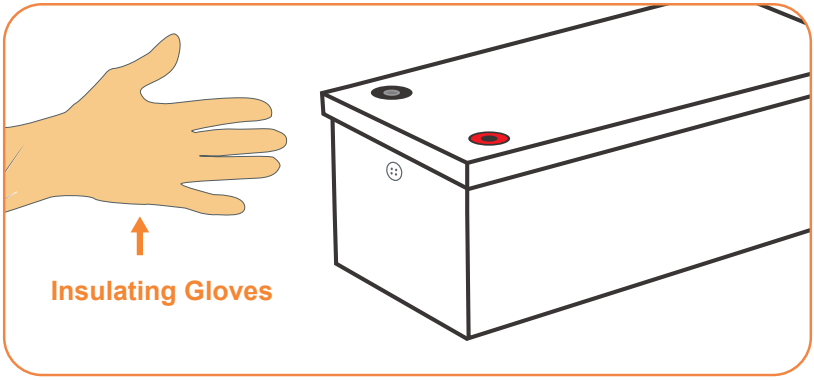

Step2 Voltage Balancing Before Connection

Below two steps are necessary to reduce the voltage difference between batteries and let the battery system perform the best of it in parallel.

STEP 1

Fully charge the batteries separately.
(voltage at rest: ≥53.8V)

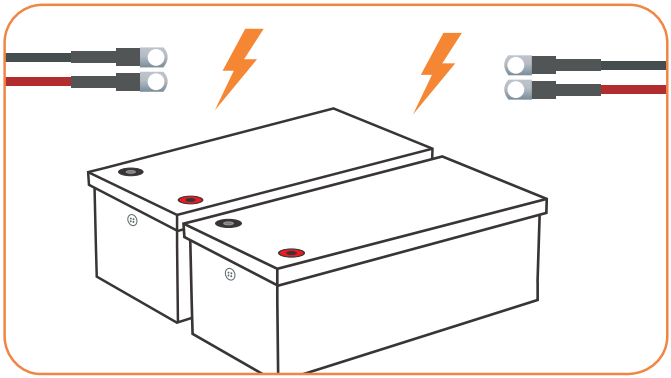

STEP **2**

Connect the batteries one by one in parallel, and leave them together for 12~24hrs. After the battery voltages have been balanced, the paralleled battery system can be connected to the load referring to Step 3 on Page 13.

Connect Batteries in Parallel ⊕ to ⊕ ⊖ to ⊖

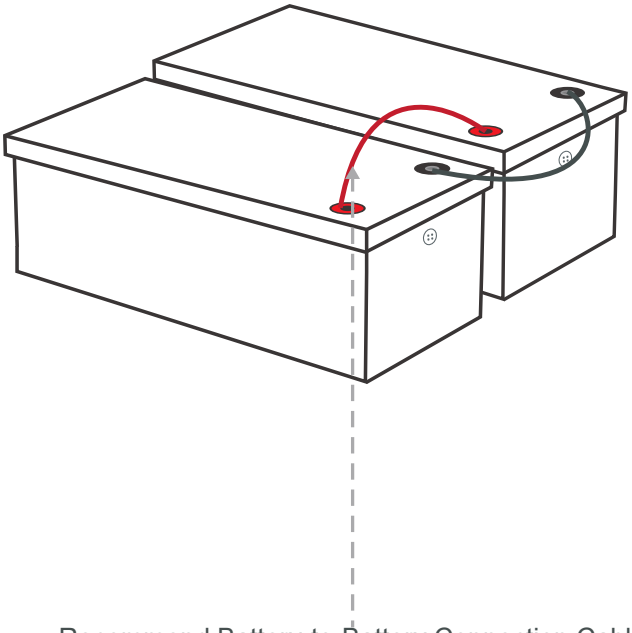

Recommend Battery-to-Battery Connection Cable:
6AWG Copper Cable.

After parallel connection, the capacity of the battery system will be doubled according to the number of batteries you connect.

Step3 Total Input & Output Connection

Adding two copper bars① to connect the paralleled system to the load.

STEP 1

Connect all the positive output cables of the batteries to one copper bar.

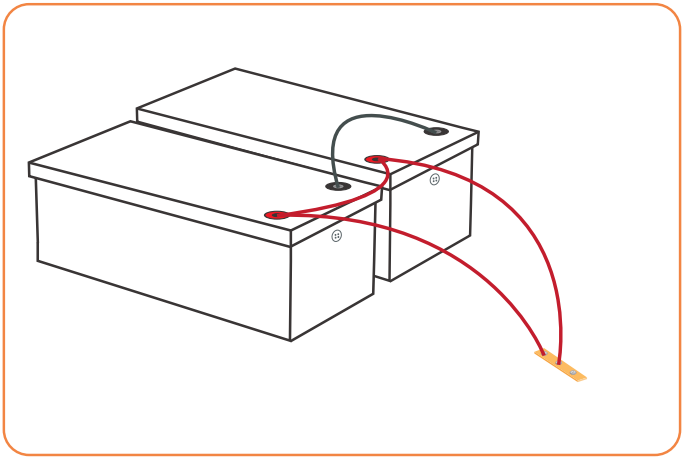

STEP 2

Connect the ⊕ of the load to the copper bar.
The cable gauge used in this step should be able to support the total input & output current of the entire battery system.

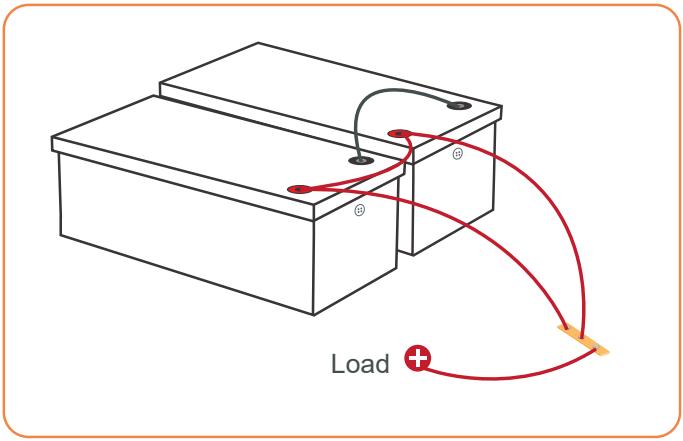

STEP 3

The ⊖ of the battery system and load are also connected to another copper bar following the above steps.

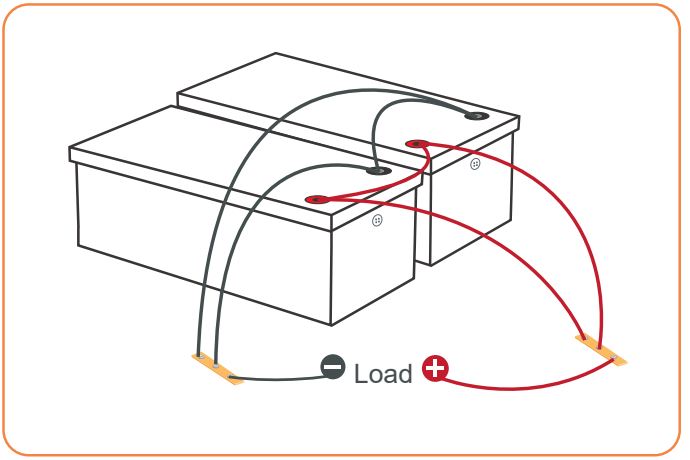

① Copper Bar: Flat metal made of copper. It can help ensure the input & output currents of each battery are balanced
Copper is recommended as it has better conductivity, and the conversion efficiency of the input & output currents for the battery will be higher.

Step 4 Rebalancing Every 6 Months

It is recommended to rebalance the battery voltage every six months following Step 2 on Page 11 if you're connecting multiple batteries as a battery system, as there might be voltage differences after six months of the battery system running.

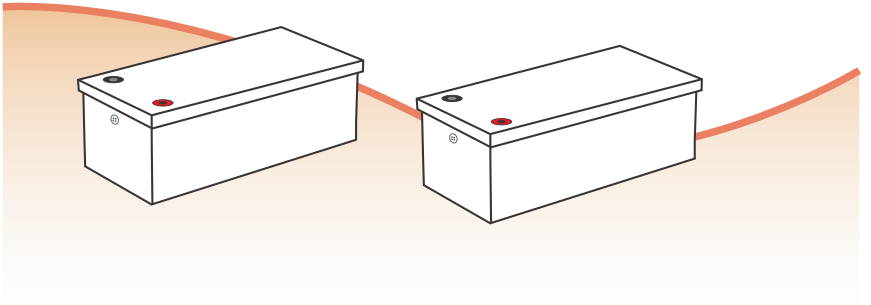

51.2V 105Ah Battery Used For Golf Carts

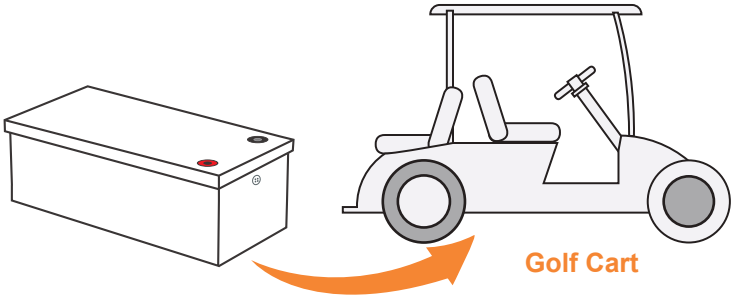

Also Suitable For Other Low-speed Vehicles

48V 210Ah Battery System:

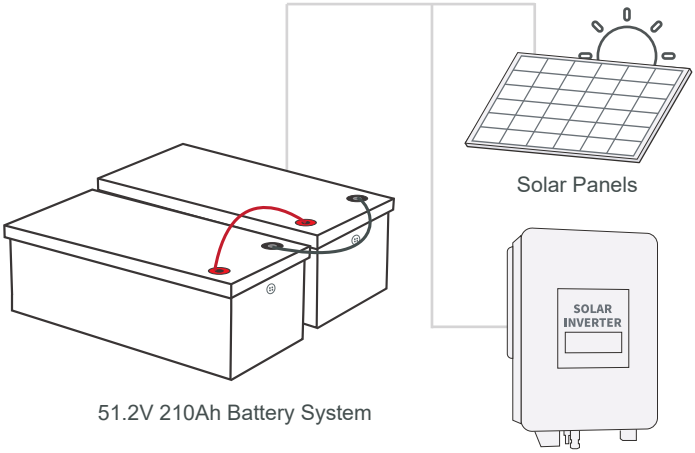

YARD LIGHT
(50W)

TV
(100W)

MICROWAVE OWEN
(800W)

COFFEE MACHINE
(1000W)

FRIDGE
(1200W)

WATER HEATER
(2000W)

↑Various Loads
Supporting Max, 21504W Load Power

INVERTER SETTINGS

METHOD ONE (RECOMMEND)

Select “51.2(58.4V) LI (LiFePO4) Mode”

METHOD TWO

If method one is not available, select“User Mode”to enter values according to below parameters.

CHARGING	Charge Voltage	58.4V
	Over Voltage Disconnect	59.2V
	Over Voltage Reconnect	54.4V
DISCHARGING	Under Voltage Warning	46.4V
	Under Voltage Recover	48V
	Low Voltage Disconnect	43.2V
	Low Voltage Reconnect	49.6V

The above setting parameters **apply to common inverters on the market** (such as Victron, Renogy, Growatt, Xantrex, Go Power, Lux Power, etc.). Different brands have slightly different descriptions or naming methods for each parameter. **Please directly set the parameters with the same meaning.**
If the inverter parameters to be set are special or cannot correspond to one of the above items, please contact info@cloudnewenergy.com for confirmation.

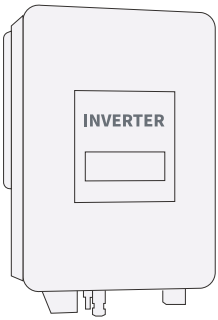

WHAT TO DO WHEN THE BATTERY STOPS WORKING?

When the battery

Can't work or Can't be charged or Voltage<40V

It has 85% chances that BMS has shut it off for protection, and you could tryone of below ways to activate the battery.

GENERAL STEPS

If the BMS has cut off the battery for protection, follow the below steps to activate it.

STEP 1

Cut off all the connections from the battery

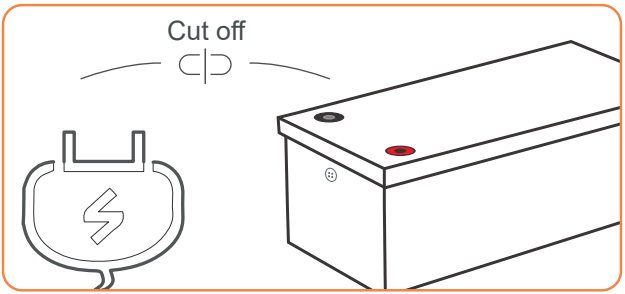

STEP 2

Leave the battery aside for 30mins

Then the battery will automatically recover itself to normal voltage (> 30 V) and can be used after fully charged.

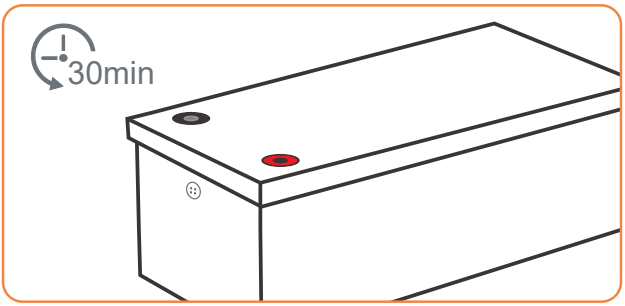

If the battery is unable to recover itself after the above steps, please try, activating by **USING A CHARGER WITH A OV CHARGING FUNCTION**① **TO FULLY CHARGE THE BATTERY.**

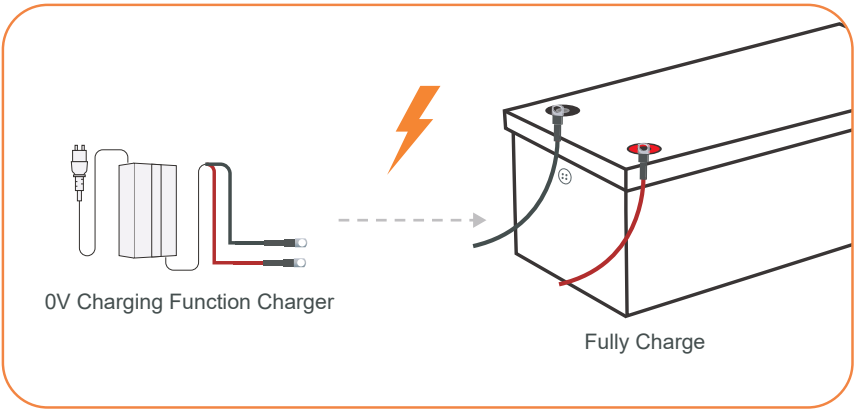

①The charger can charge the battery starting from 0V.

After activated (voltage >30V) and fully charged by the normal charging method, it can be used normally.

ATTENTION

Caution: Risk of Fire, Explosion or Burns
DO NOT Short circuit
DO NOT Reverse connections from the charger to the battery
DO NOT Disassemble
DO NOT Throw into fire or incinerate
DO NOT Heat above 70°C / 158°F

WARNING

BATTERY DISPOSAL

The electrodes of the waste battery should be wrapped with insulating paper to prevent fire and explosion.

PROHIBITION OF DISASSEMBLY

Never disassemble the cells.
The disassembling may generate an internal short circuit in the cell, which may cause gassing, firing, explosion, or other problems.

The electrolyte is harmful.
Li-Fe battery should not have liquid from electrolyte flowing, but in case the electrolyte comes into contact with the skin, or eyes, physicians shall slush the electrolyte immediately with fresh water and medical advice is to be sought.

PROHIBITION OF DUMPING OF CELLS INTO WATER

Do not soak the battery in which the liquid, like water, seawater and non-alcoholic drinks, fruit juice, coffee or other drinks.

PROHIBITION OF DISASSEMBLY

If any abnormal features of the cells are found such as damages in a plastic envelope of the cell, deformation of the cell package, smelling of an electrolyte, anelectrolyte leakage and others, the cells shall never be used anymore.
The cells with a smell of the electrolyte or a leakage shall be placed away from the fire to avoid firing or explosion.

PROHIBITION OF USING IN BELOW PLACES

Do not use the battery in a place with strong static electricity and a strong magnetic field, otherwise, it is easy to damage the battery safety protection device and bring hidden danger.

USER MANUAL OF ACCESSORY

DISPLAY OF LCD SCREEN FUNCTION page 01

INSTALLATION METHOD OF PORT PLUG page 02

MRP CHARGER PRODUCT USER page 03

DISPLAY OF LCD SCREEN FUNCTION

The battery comes with a 2.8-inch touch screen.You can view battery information in real time on the LCD.

(The following contents and data are schematic diagrams, the specific data is subject to the display)

86% Capacity/SOC	**43 A** Charge / Discharge Current
53.6V Total Voltage	**92.1°F** Temperature
999H-48M Charging Full/Discharge Empty Time	

DSG Discharge State	**CHG** Charge State
105AH Surplus Capacity	**0000** Cycle Index Counter
77.2°F/68.4°F Temperature	**NOMAL** Protection State

1~4 Voltage of each cell

INSTALLATION METHOD OF PORT PLUG

This is an ac port plug, power inlet, and waterproof electrical outlet with a 16-inch integrated outdoor extension cord that offers optimal flexibility and ease of installation. It works with any extension cord and requires no cable modifications or hand wiring. Its sleek, ultra-low-profile design not only works seamlessly on any application but includes a pressure-fit cap for a watertight seal. And it makes onboard battery charging ports, engine block heaters, or outdoor electrical outlets more accessible than ever before - giving you endless possibilities. Rated at 15-amps, 125-volts (14AWG),designed for use with all types of extension cords with Type-B plugs, and UL approved. Ideal for car, boat, marine, truck, trailer, pickup, RV, industrial and electrical applications.

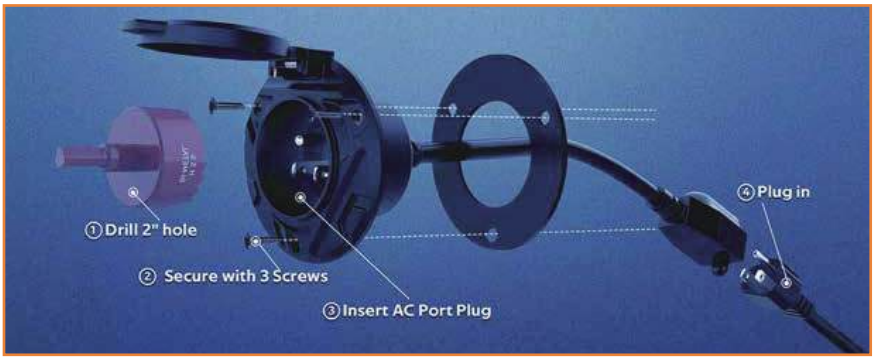

MRP CHARGER PRODUCT USER

OVERVIEW

This series of in-vehicle smart chargers can replenish the energy of the vehicle's power battery in the parking state, and the charging process is controlled by the charging program. Meet the automotive grade temperature resistance and vibration resistance requirements.

EXPANSION FUNCTION

- Maximum efficiency>90%
- Wide temperature range for operation
- Strong protection function
- 100% full load aging test
- Automotive level vibration resistance level

PROTECTION FEATURES

- Output over voltage protection.
- Output over current protection.
- Output short-circuit protection.
- Output reverse protection.
- Charger over temperature protection.

THIS CHARGER CAN BE MOUNTED IN SEVERAL DIFFERENT CONFIGURATIONS:

Preferred mounting orientation

- Horizontally flat mounted with fan facing upwards with no obstruction
- Vertically mounted with AC/DC cords facing up or down
- Side mounted with AC/DC cords facing left or right

Non-Preferred Mounting Orientation

- Horizontally mounted with fan facing the ground

NOTE:
Always mount the charger to a noncombustible material surface (metal/ brick/concrete). When choosing an installation.
location, ensurethere is space around the fan to provide sufficient cooling at minimum3 inches.

PRECAUTIONS FOR USE

WARNING

- To reduce the risk of fire, install this battery charger on a surface of non-combustible material such as brick, concrete, or metal.
- To reduce the risk of electric shock disconnect charger from AC power after using.
- Risk of electric shock. Do not touch uninsulated portion of AC or DC connectors or uninsulatde battery terminal.
- Ventilate the area when the battery is charging in an enclosed place,never smoke, use an open flame, or create sparks near the battery.
- The surface temperature is high during charging, please do not touch it.
- Only a qualified service technician should program or maintain rhe chargers.

DANGER

- A grounded outlet is required to reduce risk of electirc shock.
  Charge only batteries of the same type, voltage, cell number, and amp
- hour capacities as shown on the label. Other types of batteries may burst causing personal injury and damage.
- Do not operate this charger if AC supply cord is damaged or if the charger has received a sharp blow or is damaged in any way.

COMMON FAULTS AND SOLUTIONS

If there is fault of charger, please handle according to the below table:

- Error input voltage: To check if the input voltage conformedto the requirement or not.
- Thin input wire line: To change the suitable input wire line.
- Machine over heat: Pay attention to ventilation at the working place of charger, covering anything on the charger is not allowed.
- Output short-circuit: To check the wire line of output terminal to exclude short-circuit.
- There is no battery or reverse battery: Check the battery connection, connect the battery correctly.
- Lower voltage of battery: to manage to make battery voltage be up to the starting voltage of charger.

- Battery over heat: Pay attention to ventilation; if there set outside temperature sensor, then stick it to the battery surface tightly.
  (The temperature sensor of portable charger is inside of charger)
- Charger overheating: ensure that the charger vents and space remain unobstructed and away from the heat source.
  Remark: The Company has the final explanation right for this instruction,if there is revision, no prior notice.

INDICATOR STATUS DESCRIPTION

INDICATOR LAMP TYPE	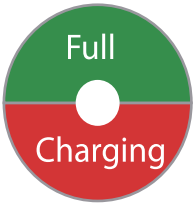
Electric quantity indication	Red light always on: <80% Green light flshing: >80% Green light always on: 100%
Electric quantity indication	Red-Green light alternation: uncharged state

NOTE:
Please check the corresponding indicator type according to the light mark on the product body.

This equipment has been tested and found to comply with the limits for a Class B digital device,pursuant to part 15 of the FCC Rules. These limits are designed to provide reasonable protection againstharmful interference in a residential installation. This equipment generates, uses and can radiateradio frequency energy and, if not installed and used in accordance with the instructions, maycause harmful interference to radio communications. However, there is no guarantee thatinterference will not occur in a particular installation. If this equipment does cause harmfulinterference to radio or television reception, which can be determined by turning the equipmentoff and on, the user is encouraged to try to correct the interference by one or more of thefollowing measures:

Reorient or relocate the receiving antenna.

Increase the separation between the equipment and receiver.

Connect the equipment into an outlet on a circuit different from that to which the receiver is connected.

Consult the dealer or an experienced radio/TV technician for help.

Caution: Any changes or modifications to this device not explicitly approved by manufacturer could void your authority to operate this equipment.

This device complies with part 15 of the FCC Rules. Operation is subject to the following two conditions:

(1)This device may not cause harmful interference, and

(2) this device must accept any interference received, including interference that may cause undesired operation.

This equipment complies with FCC radiation exposure limits set forth for an uncontrolled environment. This equipment should be installed and operated with minimum distance 20cm between the radiator and your body

www.cloudnewenergy.com

info@cloudnewenergy.com