SPECIFICATION

Ceramic Antenna 3216 Size

2400-2500 MHz

P/N: HXD-BT51

1. Frequency

2400-2500 MHz

2. Applications

For Miniaturized Bluetooth System

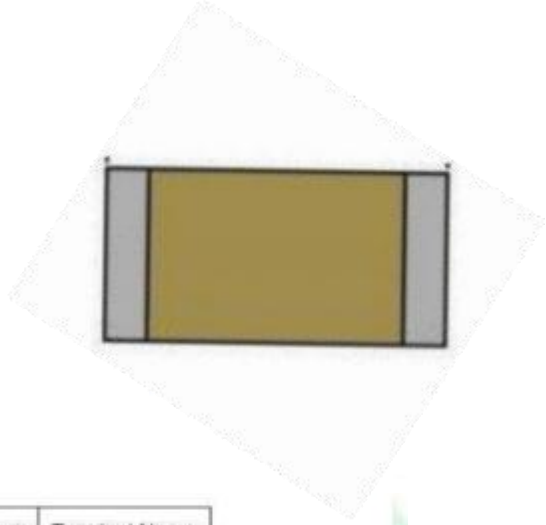

3. Dimensions (Unit : mm)

1). Over View :

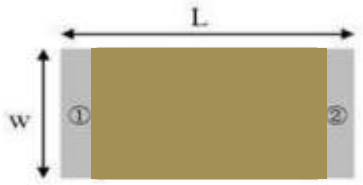

(Top View)

Number	Terminal Name
①	INPUT
②	NC

(Bottom View)

(Side View)

Symbols	L	W	T	A
Dimensions	3.2+/-0.2	1.6+/-0.2	0.5+/-0.1	0.4+/-0.1

2).PCBLYOUTVIEW:

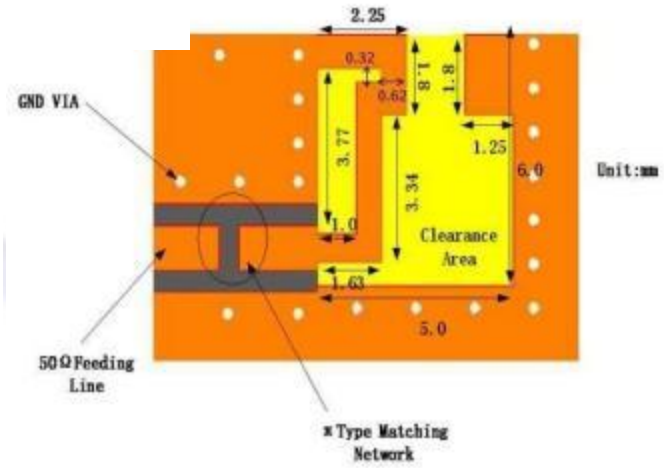

4. Evaluation Board Size and Matching Circuits

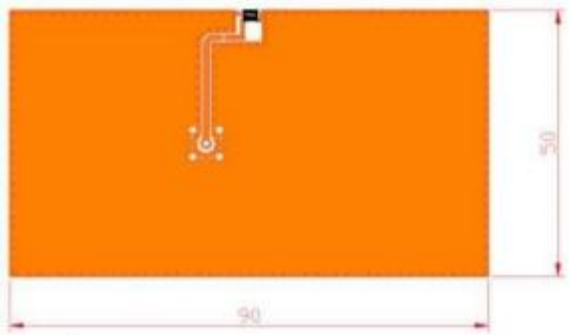

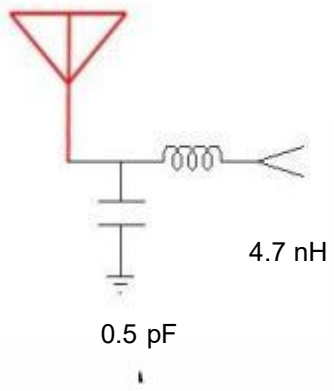

5. Electrical Characteristics

Part Number	HM3216ANT2450-HM02
Central Frequency	2450 MHz
Bandwidth	100(typ.) MHz
V.S.W.R	≤2.0
Peak Gain	4.34 dBi
Impedance	50 Ohm
Polarization	Linear
Azimuth Beamwidth	Omni-directional

6. Return Loss (S11)

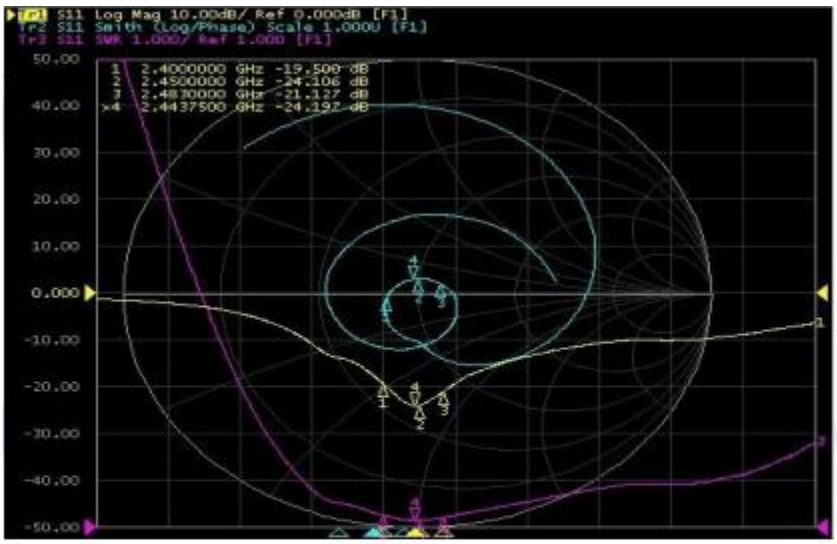

7. Radiation Pattern & Efficiency

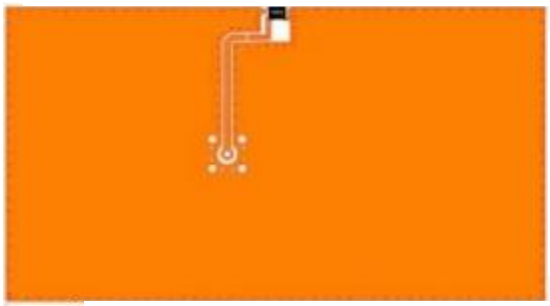

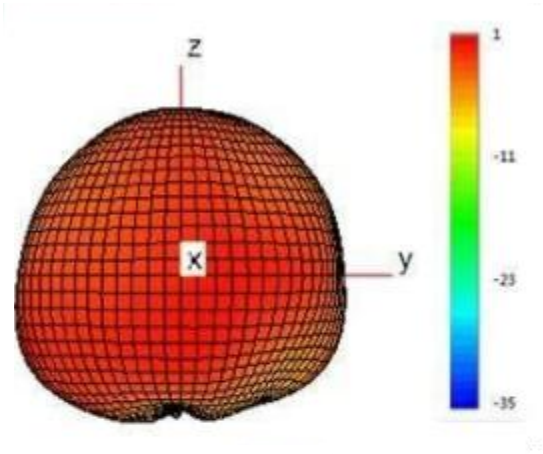

Frequency (MHz)	2400	2450	2500
Efficiency (dB)	-1.87	-1.67	-1.94
Efficiency (%)	65	68	64
Gain (dBi)	3.12	4.34	3.45

8. Reflow Soldering Standard Condition

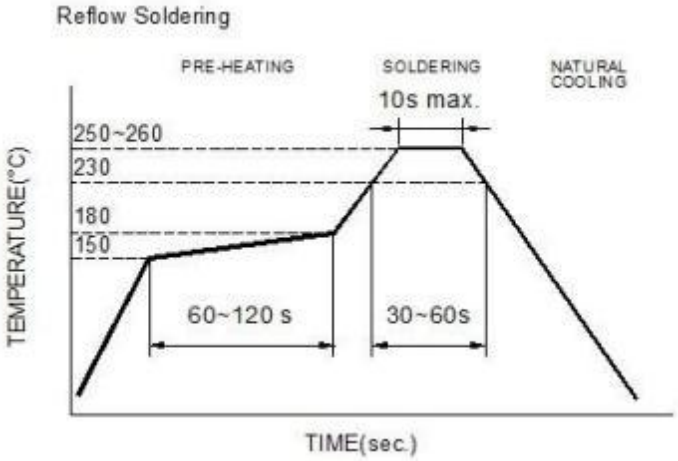

9. Packaging and Dimensions

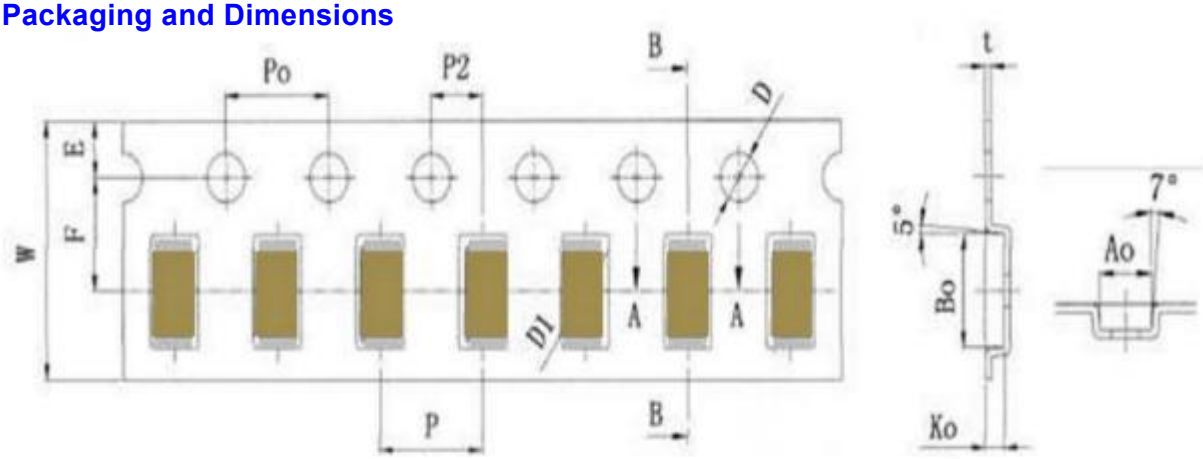

外觀	規格	公差
W	8.00	±0.10
P	4.00	±0.10
E	1.75	±0.10
F	3.50	±0.05
P2	2.00	±0.05
D	1.50	+0.10 −0.00
D1	1.00	±0.10
Po	4.00	±0.10
10Po	40.00	±0.20

外觀	規格	公差
Ao	1.85	±0.10
Bo	3.50	±0.10
Ko	0.73	±0.10
t	0.23	±0.05

Remarks for Package

Reserve a length of 150～200mm for the trailer of the carrier and 250～300 mm for the leader of the carr er and further 250mm of cover tape at the leading part of the carrier.

Reel (6000 pcs/Reel)

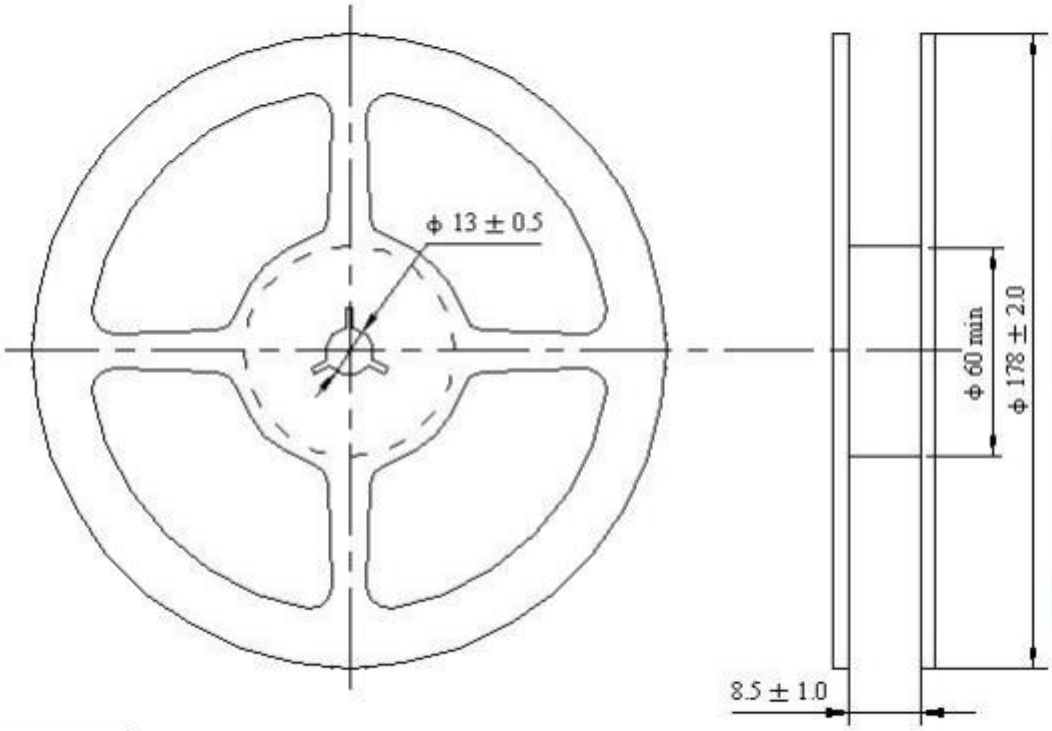

Storage Period

Oxidizable Material, 12 months in vacuum sealed bag, please repack within 168 hours by re-seal the package treatment after using.

Storage Temperature Range : <30 degree C, Humidity : <60%RH

10.Dependability Test

Test item	Test condition / Test method	Specification
Solderability IEC 60068-2-58 GB/T2423.28	*Solder bath temperature：240：5℃ *Immersion time：2：0.5 sec Solder：Sn96.5Ag3.0Gu0.5 for lead-free.	At least 95% of a surface of each terminal electrode must be covered by fresh solder.
Leaching (Resistance to dissolution of metallization) JIS C5101	*Solder bath temperature：260：5℃ *Leaching immersion time：10：1 sec Solder : Sn96.5 Ag3.0 Gu0.5 for lead-free.	Loss of metallization on the edges of each electrode shall not exceed 25%.
Resistance to soldering heat IEC 60068-2-58 GB/T2423.28	*Preheating temperature：120～150℃, 1 minute. *Solder temperature：260：5℃ *Immersion time：10：1 sec Solder：Sn96.5Ag3.0Gu0.5 for lead-free Measurement to be made after keeping at room temperature for 24：2 hrs.	No mechanical damage. Electrical specification shall satisfy the descriptions in electrical characteristics at the room temperature. Loss of metallization on the edges of each electrode shall not exceed 25%.
Drop Test IEC 60068-2-32 GB/T2423.8 Customer' s specification.	*Height：50 cm *Test Surface: Rigid surface of concrete or steel. *Times：6 surfaces for each units；2 times for each side.	No mechanical damage. Electrical specification shall satisfy the descriptions in electrical characteristics at the room temperature.
Vibration IEC 60068-2-6 GB/T 2423.10	*Frequency：10Hz～55Hz～10Hz(1min) *Total amplitude：1.5mm *Test times：6hrs.(Two hrs each in three mutually perpendicular directions)	No mechanical damage. Electrical specification shall satisfy the descriptions in electrical characteristics at the room temperature.
Adhesive Strength of Termination IEC60068-2-21 GB/T 2423.6	*Pressurizing force： 5N(≦0603)；10N(>0603) *Test time:10：1 sec	No remarkable damage or removal of the termination.

Bending test IEC 60068-2-21 GB/T 2423.29	The middle part of substrate shall be pressurized by means of the pressurizing rod at a rate of about 1 mm/s per second until the deflection becomes 2mm and then pressure shall be maintained for 10：1 sec. Measurement to be made after keeping at room temperature for 24：2 hours.	No mechanical damage. Electrical specification shall satisfy the descriptions in electrical characteristics at the room temperature.
Temperature cycle IEC60068-2-14 GB/T 2423.22	30 minutes at-40℃：2℃. 10～15 minutes at room temperature. 30minutes at +85℃：2℃. 10～15 minutes at room temperature. Total 100 continuous cycles Measurement to be made after keeping at room temperature for 24：2 hrs.	No mechanical damage. Electrical specification shall satisfy the descriptions in electrical characteristics at the room temperature.
High temperature IEC 60068-2-2 GB/T2423.2	*Temperature：85：2℃. *Test duration：500+24/-0 hours. Measurement to be made after keeping at room temperature for 24：2 hrs.	No mechanical damage. Electrical specification shall satisfy the descriptions in electrical characteristics.
Humidity (steady conditions) IEC60068-2-3 GB/T 2423.3	*Humidity：85：5%R.H. *Temperature：85：2℃. *Time：500+24/-0 hrs. Measurement to be made after keeping at room temperature for 24：2 hrs ※ 200hrs measuring the first data then 300hrs data.	No mechanical damage. Electrical specification shall satisfy the descriptions in electrical characteristics at the room temperature.
Low temperature IEC 60068-2-1 GB/T2423.1	*Temperature：-40：2℃. *Test duration：500+24/-0 hours Measurement to be made after keeping at room temperature for 24：2 hrs.	No mechanical damage. Electrical specification shall satisfy the descriptions in electrical characteristics at the room temperature.