FCC Part 15C Test Report
FCC ID: 2BRFY-J63

Applicant:	Dongguan Kunzhuo Electronic Technology Co., Ltd
Address:	No.1, Dawei Road, Jiuxiang Village, Qingxi Town, Dongguan City, Guangdong Province, China
Manufacturer:	Dongguan Kunzhuo Electronic Technology Co., Ltd
Address:	No.1, Dawei Road, Jiuxiang Village, Qingxi Town, Dongguan City, Guangdong Province, China
EUT:	Wireless binaural stereo music headphones
Trade Mark:	N/A
Model Number:	J63
Date of Receipt:	Sep. 09, 2025
Test Date:	Sep. 09, 2025 - Sep. 17, 2025
Date of Report:	Sep. 17, 2025
Prepared By:	Shenzhen DL Testing Technology Co., Ltd.
Address:	101-201, Comprehensive Building, Tongzhou Electronics Longgang Factory Area, No.1 Baolong Fifth Road, Baolong Community, Baolong Street, Longgang District, Shenzhen, China
Applicable Standards:	FCC PART 15 C 15.249 ANSI C63.10:2013
Test Result:	Pass
Report Number:	DLE-250909008R

Prepared (Test Engineer):	Ken Tan
Reviewer (Supervisor):	Jack Bu
Approved (Manager):	Jade Yang

This test report is based on a single evaluation of one sample of above mentioned products. It is not permitted to be duplicated in extracts without written approval of Shenzhen DL Testing Technology Co., Ltd.

Table of Contents **Page**

1 . SUMMARY OF TEST RESULTS 4
1.1 MEASUREMENT UNCERTAINTY 4
2 . GENERAL INFORMATION 5
2.1 GENERAL DESCRIPTION OF EUT 5
2.2 DESCRIPTION OF TEST MODES 7
2.3 BLOCK DIGRAM SHOWING THE CONFIGURATION OF SYSTEM TESTED 7
2.4 DESCRIPTION OF SUPPORT UNITS(CONDUCTED MODE) 8
2.5 TABLE OF PARAMETERS OF TEST SOFTWARE SETTING 8
2.6 EQUIPMENTS LIST FOR ALL TEST ITEMS 9
3 . EMC EMISSION TEST 10
3.1 CONDUCTED EMISSION MEASUREMENT 10
3.1.1 POWER LINE CONDUCTED EMISSION LIMITS 10
3.1.2 TEST PROCEDURE 10
3.1.3 DEVIATION FROM TEST STANDARD 10
3.1.4 TEST SETUP 11
3.1.5 EUT OPERATING CONDITIONS 11
3.1.6 TEST RESULTS 11
3.2 RADIATED EMISSION MEASUREMENT 14
3.2.1 RADIATED EMISSION LIMITS 14
3.2.2 TEST PROCEDURE 15
3.2.3 DEVIATION FROM TEST STANDARD 15
3.2.4 TEST SETUP 15
3.2.5 EUT OPERATING CONDITIONS 16
3.2.6 TEST RESULTS (BETWEEN 9KHZ – 30 MHZ) 17
3.2.7 TEST RESULTS (BETWEEN 30MHZ – 1GHZ) 18
3.2.8 TEST RESULTS (1GHZ~25GHZ) 22
3.3 RADIATED BAND EMISSION MEASUREMENT 24
3.3.1 TEST REQUIREMENT: 24
3.3.2 TEST PROCEDURE 24
3.3.3 DEVIATION FROM TEST STANDARD 24
3.3.4 TEST SETUP 25
3.3.5 EUT OPERATING CONDITIONS 25
4 . BANDWIDTH TEST 28
4.1 APPLIED PROCEDURES / LIMIT 28
4.1.1 TEST PROCEDURE 28
4.1.2 DEVIATION FROM STANDARD 28
4.1.3 TEST SETUP 28
4.1.4 EUT OPERATION CONDITIONS 28

Table of Contents **Page**

4.1.5 TEST RESULTS **29**

5 . ANTENNA REQUIREMENT **31**

5.1 STANDARD REQUIREMENT **31**

5.2 EUT ANTENNA **31**

6 . TEST SEUUP PHOTO **31**

7 . EUT PHOTO **31**

1. SUMMARY OF TEST RESULTS

Test procedures according to the technical standards:

FCC Part15 (15.249) , Subpart C			
Standard Section	Test Item	Judgment	Remark
15.207	Conducted Emission	PASS	
15.205(a), 15.209(a) 15.249(a), 15.249(c)	Fundamental &Radiated Spurious Emission Measurement	PASS	
15.249(d)	Band Edge Emission	PASS	
15.215(c)	20dB Bandwidth	PASS	
15.203	Antenna Requirement	PASS	

NOTE:

(1)" N/A" denotes test is not applicable in this Test Report

Test lab: Shenzhen DL Testing Technology Co., Ltd.

Address: 101-201, Comprehensive Building, Tongzhou Electronics Longgang Factory Area, No.1 Baolong Fifth Road, Baolong Community, Baolong Street, Longgang District, Shenzhen, China

The test results presented in this report relate only to the object tested.

This report shall not be reproduced, except in full, without the written approval of the Issuing DL Testing Laboratory. The authenticity of this Test Report and its contents can be verified by contacting the DL Testing, responsible for this Test Report.

FCC Test Firm Registration Number: 854456
Designation Number: CN1307
IC Registered No.: 27485
CAB ID.: CN0118

1.1 MEASUREMENT UNCERTAINTY

The reported uncertainty of measurement **y ± U**, where expended uncertainty **U** is based on a standard uncertainty multiplied by a coverage factor of **k=2**,providing a level of confidence of approximately **95** %.

No.	Item	Uncertainty
1	Conducted Emission Test	±2.56dB
2	RF power,conducted	±0.42dB
3	Spurious emissions,conducted	±2.76dB
4	All emissions,radiated(<1G)	±3.65dB
5	All emissions,radiated(>1G)	±4.89dB
6	Temperature	±0.5°C
7	Humidity	±2%
8	20dB Bandwidth	±0.2MHz

2. GENERAL INFORMATION

2.1 GENERAL DESCRIPTION OF EUT

Product Name:	Wireless binaural stereo music headphones
Trademark	N/A
Model No.:	J63
Model Difference	N/A
Operation Frequency:	2402~2480MHz
Channel numbers:	79 Channels
Channel separation:	1MHz
Modulation technology:	GFSK, PI/4 DQPSK
Antenna Type:	Internal Antenna
Antenna gain:	2.7dBi
Power supply:	DC 3.7V from battery DC 5V from charger

Note:

1.For a more detailed features description, please refer to the manufacturer's specifications or the User's Manual.

2.The EUT's all information provided by client.

3. The components and schematic diagram of the left earphone and the right earphone of this product are the same, but the relevant component layout is slightly different. Both are non-RF partial circuits, and both the left and right headphones are tested, recording only the worst case right headphones.

3.

Channel List					
Channel	Frequency (MHz)	Channel	Frequency (MHz)	Channel	Frequency (MHz)
00	2402	27	2429	54	2456
01	2403	28	2430	55	2457
02	2404	29	2431	56	2458
03	2405	30	2432	57	2459
04	2406	31	2433	58	2460
05	2407	32	2434	59	2461
06	2408	33	2435	60	2462
07	2409	34	2436	61	2463
08	2410	35	2437	62	2464
09	2411	36	2438	63	2465
10	2412	37	2439	64	2466
11	2413	38	2440	65	2467
12	2414	39	2441	66	2468
13	2415	40	2442	67	2469
14	2416	41	2443	68	2470
15	2417	42	2444	69	2471
16	2418	43	2445	70	2472
17	2419	44	2446	71	2473
18	2420	45	2447	72	2474
19	2421	46	2448	73	2475
20	2422	47	2449	74	2476
21	2423	48	2450	75	2477
22	2424	49	2451	76	2478
23	2425	50	2452	77	2479
24	2426	51	2453	78	2480
25	2427	52	2454		
26	2428	53	2455		

2.2 DESCRIPTION OF TEST MODES

To investigate the maximum EMI emission characteristics generates from EUT, the test system was pre-scanning tested base on the consideration of following EUT operation mode or test configuration mode which possible have effect on EMI emission level. Each of these EUT operation mode(s) or test configuration mode(s) mentioned above was evaluated respectively.

Pretest Mode	Description	
Mode 1	CH00	GFSK,PI/4 DQPSK
Mode 2	CH39	
Mode 3	CH78	
Mode 4	Link Mode	

For Conducted & Radiated Emission		
Final Test Mode	Description	
Mode 1	CH00	GFSK,PI/4 DQPSK
Mode 2	CH39	
Mode 3	CH78	
Mode 4	Link Mode	

Note: (1) The measurements are performed at the highest, middle, lowest available channels.

2.3 BLOCK DIGRAM SHOWING THE CONFIGURATION OF SYSTEM TESTED

Radiated Spurious Emission Test

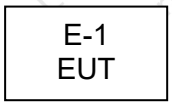

Power line conducted emission Test

2.4 DESCRIPTION OF SUPPORT UNITS(CONDUCTED MODE)

The EUT has been tested as an independent unit together with other necessary accessories or support units. The following support units or accessories were used to form a representative test configuration during the tests.

Item	Equipment	Model/Type No.	Series No.	Note
E-1	Wireless binaural stereo music headphones	J63	N/A	EUT
E-2	Adapter	HW-0501000E	N/A	XIAOMI

Item	Shielded Type	Ferrite Core	Length	Note

Note:

(1) For detachable type I/O cable should be specified the length in cm in『Length』column.

2.5 TABLE OF PARAMETERS OF TEST SOFTWARE SETTING

During testing, channel & power controlling software provided by the customer was used to control the operating channel as well as the output power level. The RF output power selection is for the setting of RF output power expected by the customer and is going to be fixed on the end product.

Test software Version	Test program: RF Test_V1.2		
Frequency	2402 MHz	2441 MHz	2480 MHz
Power Setting of Softwave	10	10	10

2.6 EQUIPMENTS LIST FOR ALL TEST ITEMS

Radiation test, Band-edge test and 20db bandwidth test equipment

Item	Equipment	Manufacturer	Type No.	Serial No.	Last calibration	Calibrated until
1	Spectrum Analyzer (9kHz-26.5GHz)	Agilent	E4408B	MY50140780	Nov. 01, 2024	Oct. 31, 2025
2	Test Receiver (9kHz-7GHz)	R&S	ESRP7	101393	Nov. 01, 2024	Oct. 31, 2025
3	Bilog Antenna (30MHz-1GHz)	R&S	VULB9162	00306	Nov. 01, 2024	Oct. 31, 2025
4	Horn Antenna (1GHz-18GHz)	Schwarzbeck	BBHA9120D	02139	Nov. 01, 2024	Oct. 31, 2025
5	Horn Antenna (18GHz-40GHz)	A.H. Systems	SAS-574	588	Nov. 01, 2024	Oct. 31, 2025
6	Amplifier (9KHz-6GHz)	Schwarzbeck	BBV9743B	00153	Nov. 01, 2024	Oct. 31, 2025
7	Amplifier (1GHz-18GHz)	EMEC	EM01G8GA	00270	Nov. 01, 2024	Oct. 31, 2025
8	Amplifier (18GHz-40GHz)	Quanjuda	DLE-161	97	Nov. 01, 2024	Oct. 31, 2025
9	Loop Antenna (9KHz-30MHz)	Schwarzbeck	FMZB1519B	00014	Nov. 01, 2024	Oct. 31, 2025
10	RF cables1 (9kHz-1GHz)	ChengYu	966	004	Nov. 01, 2024	Oct. 31, 2025
11	RF cables2 (1GHz-40GHz)	ChengYu	966	003	Nov. 01, 2024	Oct. 31, 2025
12	Antenna connector	Florida RF Labs	N/A	RF 01#	Nov. 01, 2024	Oct. 31, 2025
13	Power probe	KEYSIGHT	U2021XA	MY55210018	Nov. 01, 2024	Oct. 31, 2025
14	Signal Analyzer 9kHz-26.5GHz	Agilent	N9020A	MY55370280	Nov. 01, 2024	Oct. 31, 2025
15	Test Receiver 20kHz-40GHz	R&S	ESU 40	100376	Nov. 01, 2024	Oct. 31, 2025
16	D.C. Power Supply	LongWei	PS-305D	010964729	Nov. 01, 2024	Oct. 31, 2025
17	Temperature & humidity chamber	Changfeng	CF-150-40-P	CF170802-01	Nov. 01, 2024	Oct. 31, 2025

Conduction Test equipment

Item	Equipment	Manufacturer	Type No.	Serial No.	Last calibration	Calibrated until
1	843 Shielded Room	YIHENG	843 Room	843	Nov. 05, 2023	Nov. 04, 2026
2	EMI Receiver	R&S	ESR	101421	Nov. 01, 2024	Oct. 31, 2025
3	LISN	R&S	ENV216	102417	Nov. 01, 2024	Oct. 31, 2025
4	843 Cable 1#	ChengYu	CE Cable	001	Nov. 01, 2024	Oct. 31, 2025

Other

Item	Name	Manufacturer	Model	Software version
1	EMC Conduction Test System	FALA	EZ_EMC	EMC-CON 3A1.1
2	EMC radiation test system	FALA	EZ_EMC	FA-03A2
3	RF test system	MAIWEI	MTS8310	2.0.0.0
4	RF communication test system	MAIWEI	MTS8200	2.0.0.0

3. EMC EMISSION TEST

3.1 CONDUCTED EMISSION MEASUREMENT

3.1.1 POWER LINE CONDUCTED EMISSION Limits (Frequency Range 150KHz-30MHz)

FREQUENCY (MHz)	Limit (dBuV)		Standard
	Quasi-peak	Average	
0.15 -0.5	66 - 56 *	56 - 46 *	FCC
0.50 -5.0	56.00	46.00	FCC
5.0 -30.0	60.00	50.00	FCC

Note:

(1) The tighter limit applies at the band edges.

(2) The limit of " * " marked band means the limitation decreases linearly with the logarithm of the frequency in the range.

The following table is the setting of the receiver

Receiver Parameters	Setting
Attenuation	10 dB
Start Frequency	0.15 MHz
Stop Frequency	30 MHz
IF Bandwidth	9 kHz

3.1.2 TEST PROCEDURE

a. The EUT was placed 0.8 meters from the horizontal ground plane with EUT being connected to the power mains through a line impedance stabilization network (LISN). All other support equipments powered from additional LISN(s). The LISN provide 50 Ohm/ 50uH of coupling impedance for the measuring instrument.

b. Interconnecting cables that hang closer than 40 cm to the ground plane shall be folded back and forth in the center forming a bundle 30 to 40 cm long.

c. I/O cables that are not connected to a peripheral shall be bundled in the center. The end of the cable may be terminated, if required, using the correct terminating impedance. The overall length shall not exceed 1 m.

d. LISN at least 80 cm from nearest part of EUT chassis.

e. For the actual test configuration, please refer to the related Item –EUT Test Photos.

3.1.3 DEVIATION FROM TEST STANDARD

No deviation

3.1.4 TEST SETUP

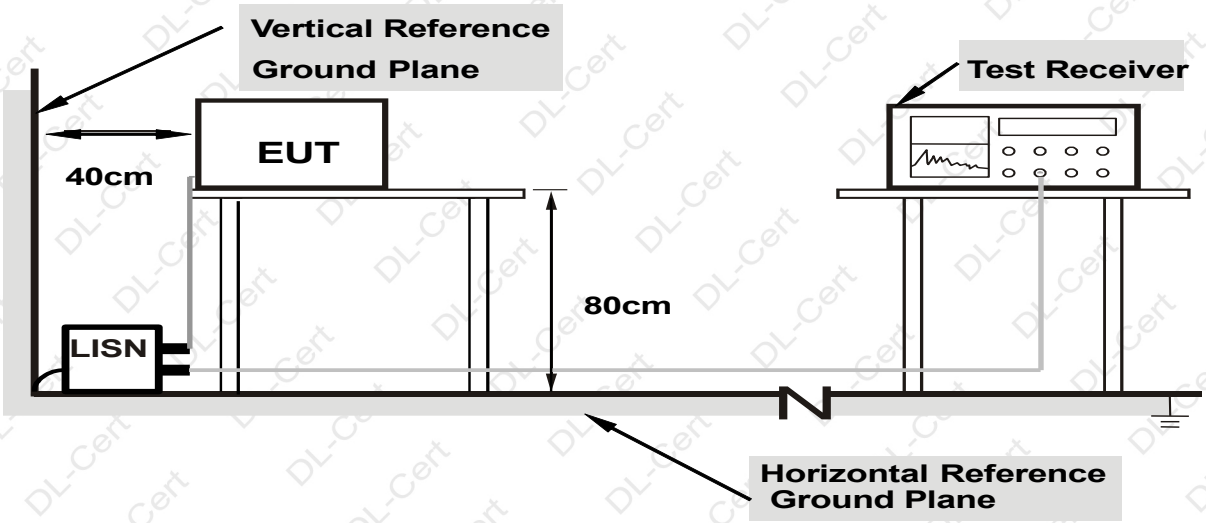

Note: 1.Support units were connected to second LISN.
2.Both of LISNs (AMN) are 80 cm from EUT and at least 80 cm from other units and other metal planes

3.1.5 EUT OPERATING CONDITIONS

The EUT was configured for testing in a typical fashion (as a customer would normally use it). The EUT has been programmed to continuously transmit during test. This operating condition was tested and used to collect the included data.
We pretest AC 120V and AC 230V, the worst voltage was AC 120V and the data recording in the report.

3.1.6 TEST RESULTS

PASS
Please refer to the following page.

Temperature:	25 ℃	Relative Humidity:	54%
Pressure:	1010hPa	Phase :	L
Test Voltage :	AC 120V/60Hz	Test Mode:	Mode 5

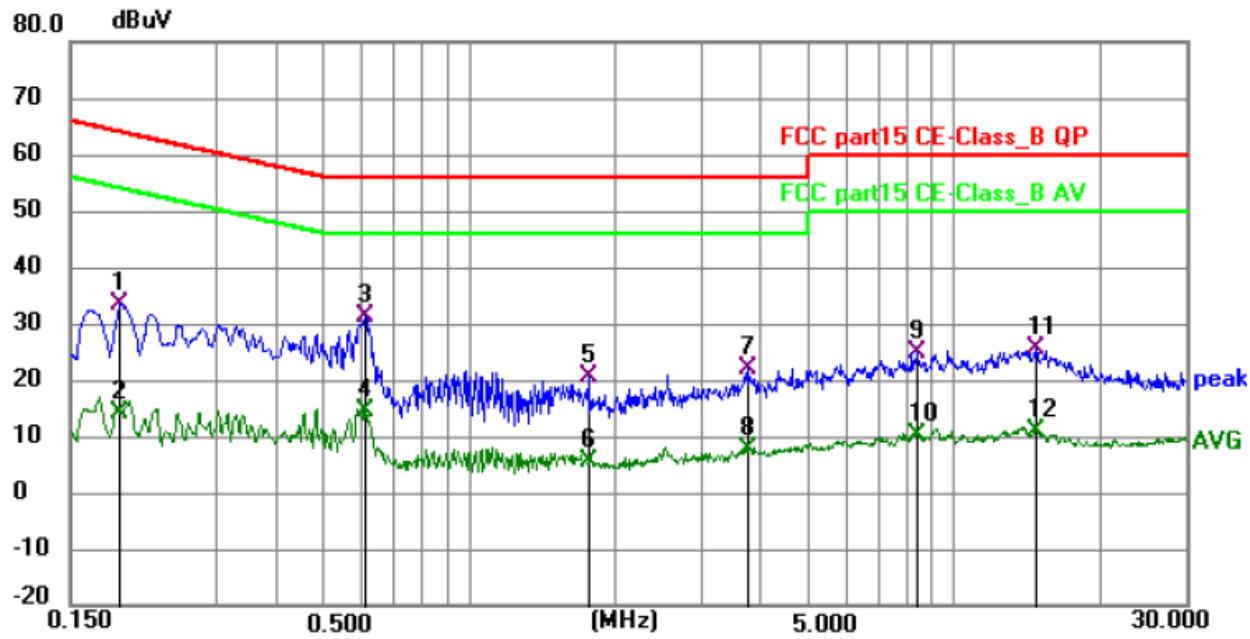

Remark:

Margin = Limit – Level, Correct Factor = Cable lose + LISN insertion loss, Level= Reading + Correct factor

No.	Frequency (MHz)	Reading (dBuV)	Factor (dB)	Level (dBuV)	Limit (dBuV)	Margin (dB)	Detector	P/F	Remark
1	0.1905	23.43	10.07	33.50	64.01	-30.51	QP	P	
2	0.1905	4.12	10.07	14.19	54.01	-39.82	AVG	P	
3 *	0.6090	21.28	10.13	31.41	56.00	-24.59	QP	P	
4	0.6090	4.24	10.13	14.37	46.00	-31.63	AVG	P	
5	1.7565	10.36	10.06	20.42	56.00	-35.58	QP	P	
6	1.7565	-4.47	10.06	5.59	46.00	-40.41	AVG	P	
7	3.7500	11.61	10.18	21.79	56.00	-34.21	QP	P	
8	3.7500	-2.39	10.18	7.79	46.00	-38.21	AVG	P	
9	8.3805	13.85	11.00	24.85	60.00	-35.15	QP	P	
10	8.3805	-0.68	11.00	10.32	50.00	-39.68	AVG	P	
11	14.6895	13.99	11.65	25.64	60.00	-34.36	QP	P	
12	14.6895	-0.73	11.65	10.92	50.00	-39.08	AVG	P	

Temperature:	25 ℃	Relative Humidity:	54%
Pressure:	1010hPa	Phase :	N
Test Voltage :	AC 120V/60Hz	Test Mode:	Mode 5

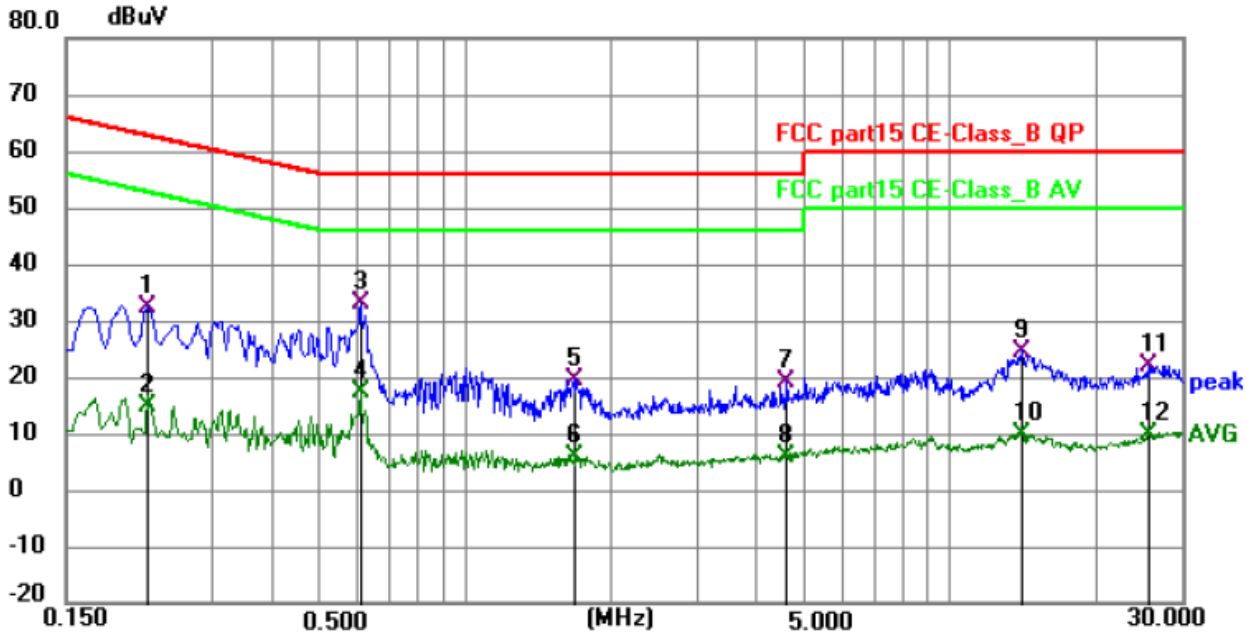

Remark:

Margin = Limit – Level, Correct Factor = Cable lose + LISN insertion loss, Level= Reading + Correct factor

No.	Frequency (MHz)	Reading (dBuV)	Factor (dB)	Level (dBuV)	Limit (dBuV)	Margin (dB)	Detector	P/F	Remark
1	0.2220	22.16	10.18	32.34	62.74	-30.40	QP	P	
2	0.2220	4.82	10.18	15.00	52.74	-37.74	AVG	P	
3 *	0.6090	22.70	10.16	32.86	56.00	-23.14	QP	P	
4	0.6090	7.17	10.16	17.33	46.00	-28.67	AVG	P	
5	1.6755	9.46	10.07	19.53	56.00	-36.47	QP	P	
6	1.6755	-4.31	10.07	5.76	46.00	-40.24	AVG	P	
7	4.6050	8.79	10.24	19.03	56.00	-36.97	QP	P	
8	4.6050	-4.28	10.24	5.96	46.00	-40.04	AVG	P	
9	14.0955	13.13	11.51	24.64	60.00	-35.36	QP	P	
10	14.0955	-1.72	11.51	9.79	50.00	-40.21	AVG	P	
11	25.6020	9.22	12.62	21.84	60.00	-38.16	QP	P	
12	25.6020	-2.78	12.62	9.84	50.00	-40.16	AVG	P	

3.2 RADIATED EMISSION MEASUREMENT

3.2.1 RADIATED EMISSION LIMITS (Frequency Range 9kHz-1000MHz)

In case the emission fall within the restricted band specified on 15.205(a), then the 15.209(a) limit in the table below has to be followed.

Frequency (MHz)	Field Strength (micorvolts/meter)	Measurement Distance (meters)
0.009~0.490	2400/F(KHz)	300
0.490~1.705	24000/F(KHz)	30
1.705~30.0	30	30
30~88	100	3
88~216	150	3
216~960	200	3
Above 960	500	3

The field strength of emissions from intentional radiators operated within these frequency bands shall comply with the following:

Fundamental Frequency	Field Strength of Fundamental (millivolts/meter)	Field Strength of Harmonics (microvolts/meter)
902 - 928 MHz	50	500
2400 - 2483.5 MHz	50	500
5725 - 5875 MHz	50	500
24.0 - 24.25 GHz	250	2500

LIMITS OF RADIATED EMISSION MEASUREMENT (Above 1000MHz)

FREQUENCY (MHz)	Limit (dBuV/m) (at 3M)	
	PEAK	AVERAGE
Above 1000	74	54

Notes:

(1) The limit for radiated test was performed according to FCC PART 15C.

(2) The tighter limit applies at the band edges.

(3) Emission level (dBuV/m)=20log Emission level (uV/m).

(4) Emissions radiated outside of the specified frequency bands, except for harmonics, shall be attenuated by at least 50 dB below the level of the fundamental or to the general radiated emission limits in § 15.209, whichever is the lesser attenuation.

Receiver setup:

Frequency	Detector	RBW	VBW	Value
9KHz-150KHz	Quasi-peak	200Hz	600Hz	Quasi-peak
150KHz-30MHz	Quasi-peak	9KHz	30KHz	Quasi-peak
30MHz-1GHz	Quasi-peak	100KHz	300KHz	Quasi-peak
Above 1GHz	Peak	1MHz	3MHz	Peak

	Peak	1MHz	10Hz	Average

3.2.2 TEST PROCEDURE

Below 1GHz test procedure as below:

a. The EUT was placed on the top of a rotating table 0.8 meters above the ground at a 3 meter semi-anechoic camber. The table was rotated 360 degrees to determine the position of the highest radiation.
b. The EUT was set 3 meters away from the interference-receiving antenna, which was mounted on the top of a variable-height antenna tower.
c. The antenna height is varied from one meter to four meters above the ground to determine the maximum value of the field strength. Both horizontal and vertical polarizations of the antenna are set to make the measurement.
d. For each suspected emission, the EUT was arranged to its worst case and then the antenna was tuned to heights from 1 meter to 4 meters (for the test frequency of below 30MHz, the antenna was tuned to heights 1 meter) and the rotatable table was turned from 0 degrees to 360 degrees to find the maximum reading.
e. The test-receiver system was set to Peak Detect Function and Specified Bandwidth with Maximum Hold Mode.
f. If the emission level of the EUT in peak mode was 10dB lower than the limit specified, then testing could be stopped and the peak values of the EUT would be reported. Otherwise the emissions that did not have 10dB margin would be re-tested one by one using peak, quasi-peak or average method as specified and then reported in a data sheet.

Above 1GHz test procedure as below:

g. The EUT was placed on the top of a rotating table 1.5 meters above the ground at a 3 meter semi-anechoic camber.
h. Test the EUT in the lowest channel ,the middle channel ,the Highest channel

Note:

Both horizontal and vertical antenna polarities were tested
and performed pretest to three orthogonal axis. The worst case emissions were reported

3.2.3 DEVIATION FROM TEST STANDARD

No deviation

3.2.4 TEST SETUP

（A）Radiated Emission Test-Up Frequency Below 30MHz

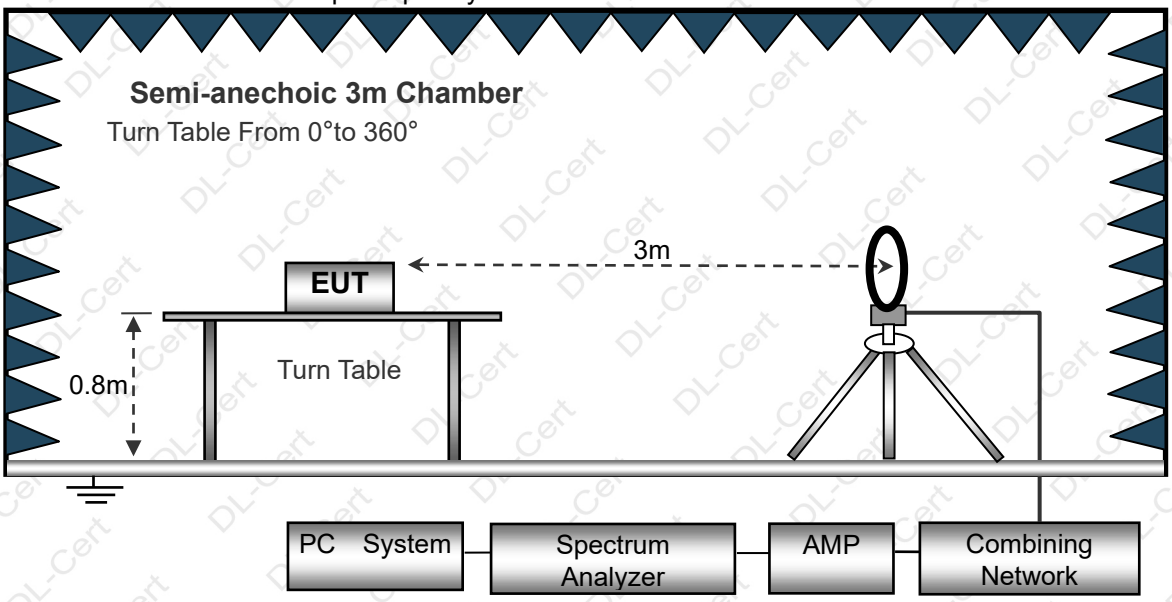

（B）Radiated Emission Test-Up Frequency 30MHz~1GHz

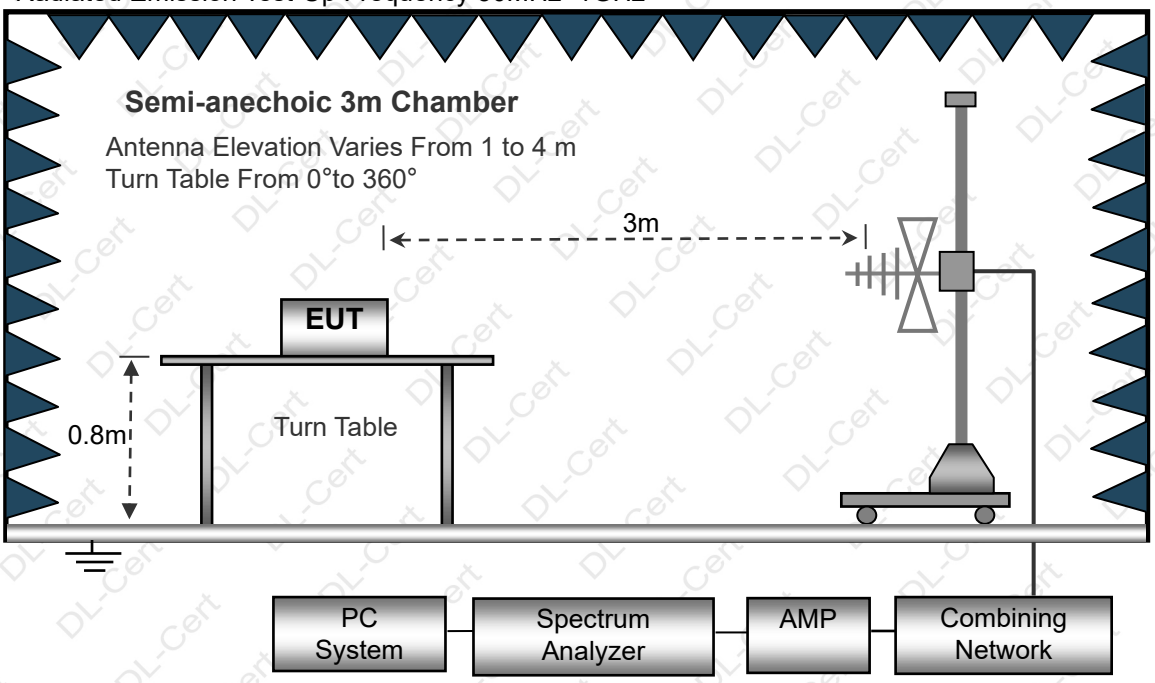

（C）Radiated Emission Test-Up Frequency Above 1GHz

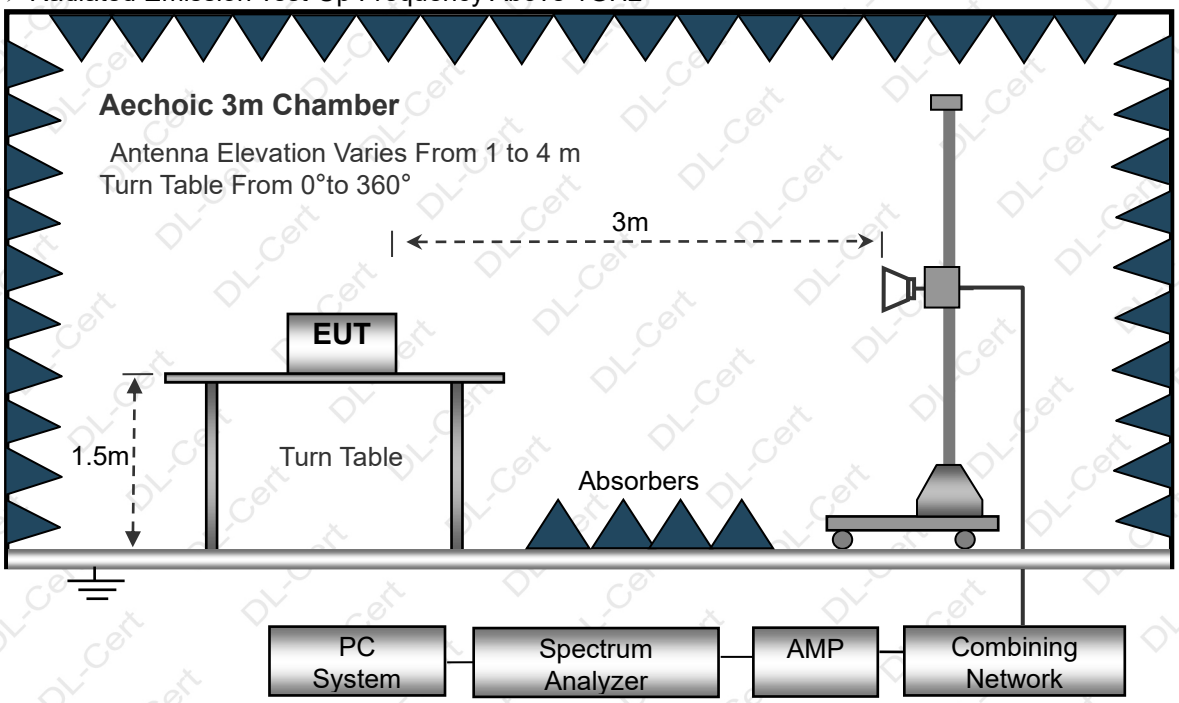

3.2.5 EUT OPERATING CONDITIONS

The EUT tested system was configured as the statements of 2.3 Unless otherwise a special operating condition is specified in the follows during the testing.

3.2.6 TEST RESULTS (BETWEEN 9KHZ – 30 MHZ)

Temperature:	20℃	Relative Humidtity:	48%
Pressure:	1010 hPa	Test Voltage :	DC 3.7V
Test Mode :	Mode 4	Polarization :	--

Freq.	Reading	Limit	Margin	State
(MHz)	(dBuV/m)	(dBuV/m)	(dB)	P/F
--	--	--	--	PASS
--	--	--	--	PASS

NOTE:

The amplitude of spurious emissions which are attenuated by more than 20dB below the permissible value has no need to be reported.
Distance extrapolation factor =40 log (specific distance/test distance)(dB);
Limit line = specific limits(dBuv) + distance extrapolation factor.

3.2.7 TEST RESULTS (BETWEEN 30MHZ – 1GHZ)

Temperature:	26℃	Relative Humidity:	54%
Pressure:	1010 hPa	Polarization :	Horizontal
Test Voltage :	DC 3.7V		
Test Mode :	Mode 4(Left earphone)		

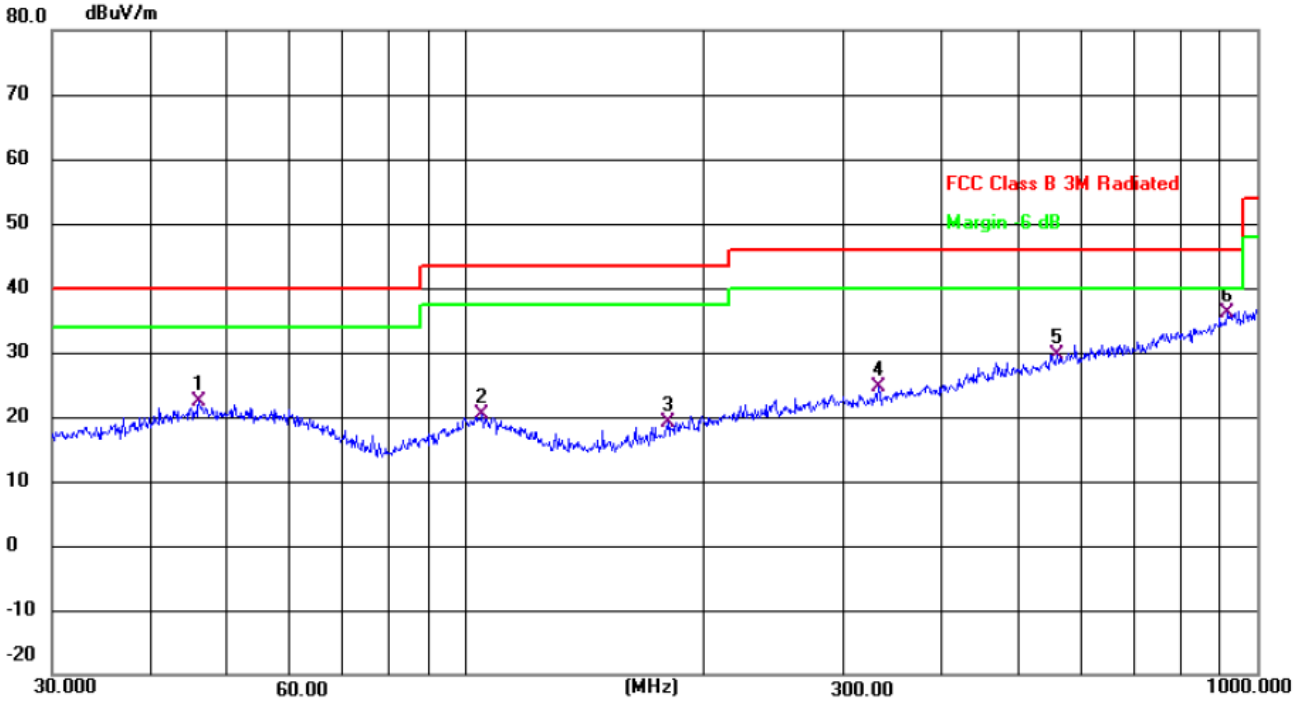

No.	Mk.	Freq.	Reading Level	Correct Factor	Measure-ment	Limit	Margin	
		MHz	dBuV	dB	dBuV/m	dB/m	dB	Detector
1		46.0164	28.66	-6.35	22.31	40.00	-17.69	QP
2		104.9033	28.66	-8.31	20.35	43.50	-23.15	QP
3		180.0165	29.31	-10.28	19.03	43.50	-24.47	QP
4		332.5187	30.13	-5.46	24.67	46.00	-21.33	QP
5		558.7302	29.67	0.07	29.74	46.00	-16.26	QP
6	*	916.0687	30.10	6.00	36.10	46.00	-9.90	QP

Remark:
Correct Factor = Cable loss + Antenna factor – Preamplifier;
Level = Reading Level + Correct Factor; Margin = Level - Limit;

Temperature:	26℃	Relative Humidity:	54%
Pressure:	1010 hPa	Polarization :	Vertical
Test Voltage :	DC 3.7V		
Test Mode :	Mode 4(Left earphone)		

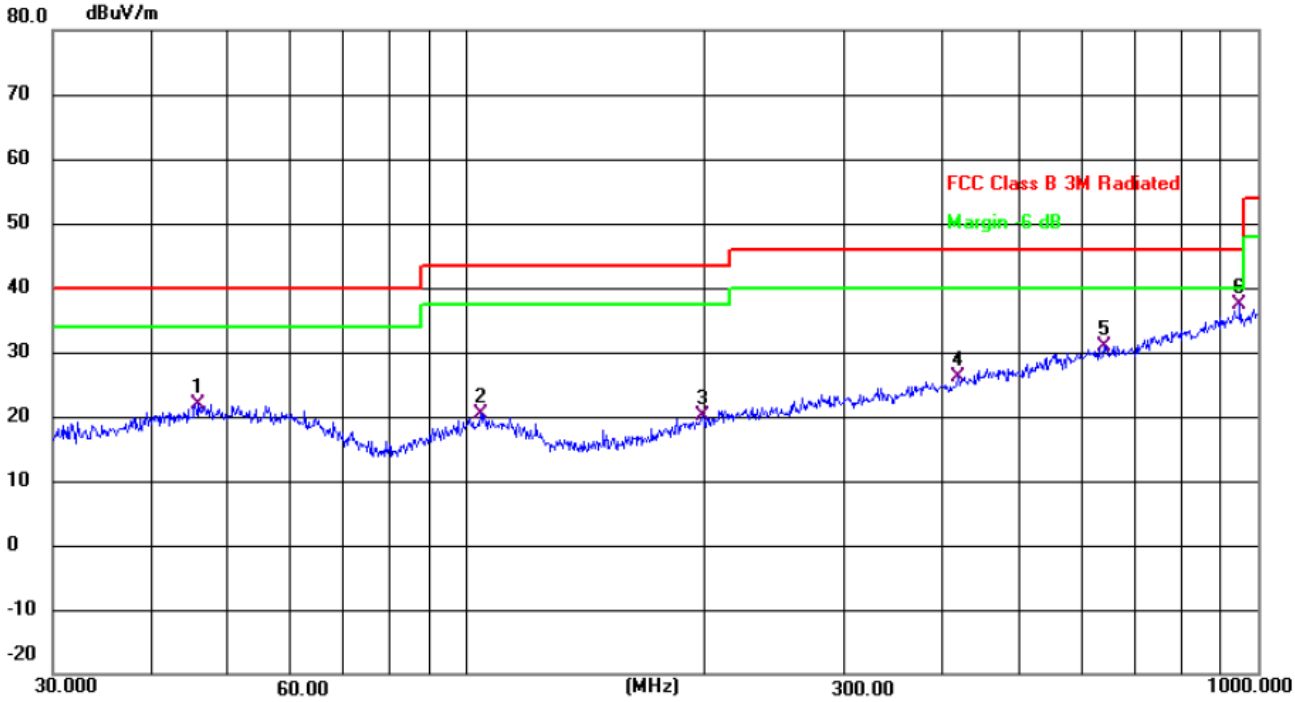

No.	Mk.	Freq.	Reading Level	Correct Factor	Measure-ment	Limit	Margin	
		MHz	dBuV	dB	dBuV/m	dB/m	dB	Detector
1		45.8553	28.29	-6.43	21.86	40.00	-18.14	QP
2		104.1701	28.88	-8.47	20.41	43.50	-23.09	QP
3		198.5880	28.94	-8.90	20.04	43.50	-23.46	QP
4		417.6411	29.63	-3.56	26.07	46.00	-19.93	QP
5		638.3686	29.86	1.09	30.95	46.00	-15.05	QP
6	*	948.7610	31.86	5.51	37.37	46.00	-8.63	QP

Remark:

Correct Factor = Cable loss + Antenna factor – Preamplifier;

Level = Reading Level + Correct Factor; Margin = Level - Limit;

Temperature:	26℃	Relative Humidity:	54%
Pressure:	1010 hPa	Polarization :	Horizontal
Test Voltage :	DC 3.7V		
Test Mode :	Mode 4(Right earphone)		

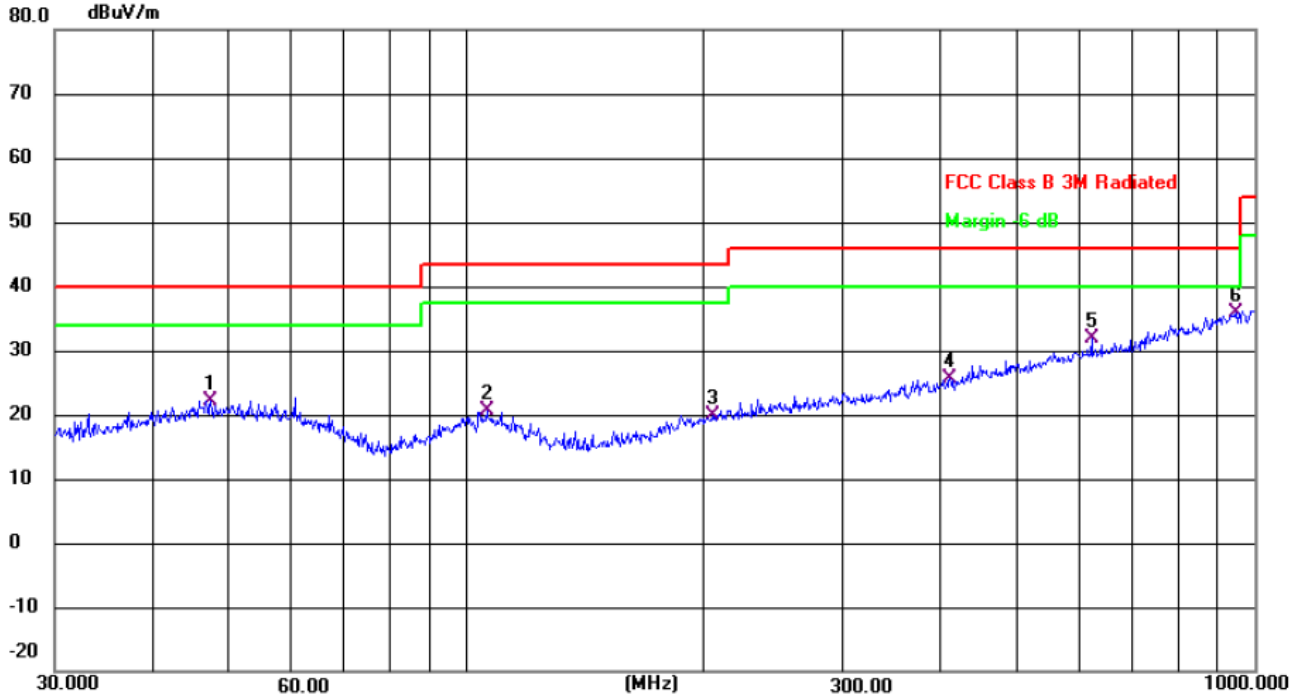

No.	Mk.	Freq.	Reading Level	Correct Factor	Measure-ment	Limit	Margin	
		MHz	dBuV	dB	dBuV/m	dB/m	dB	Detector
1		47.3255	28.96	-6.77	22.19	40.00	-17.81	QP
2		106.0126	29.31	-8.78	20.53	43.50	-22.97	QP
3		204.9551	28.92	-8.95	19.97	43.50	-23.53	QP
4		410.3825	29.27	-3.74	25.53	46.00	-20.47	QP
5		620.7096	30.96	0.87	31.83	46.00	-14.17	QP
6	*	948.7610	30.49	5.51	36.00	46.00	-10.00	QP

Remark:

Correct Factor = Cable loss + Antenna factor – Preamplifier;

Level = Reading Level + Correct Factor; Margin = Level - Limit;

Temperature:	26℃	Relative Humidity:	54%
Pressure:	1010 hPa	Polarization :	Vertical
Test Voltage :	DC 3.7V		
Test Mode :	Mode 4(Right earphone)		

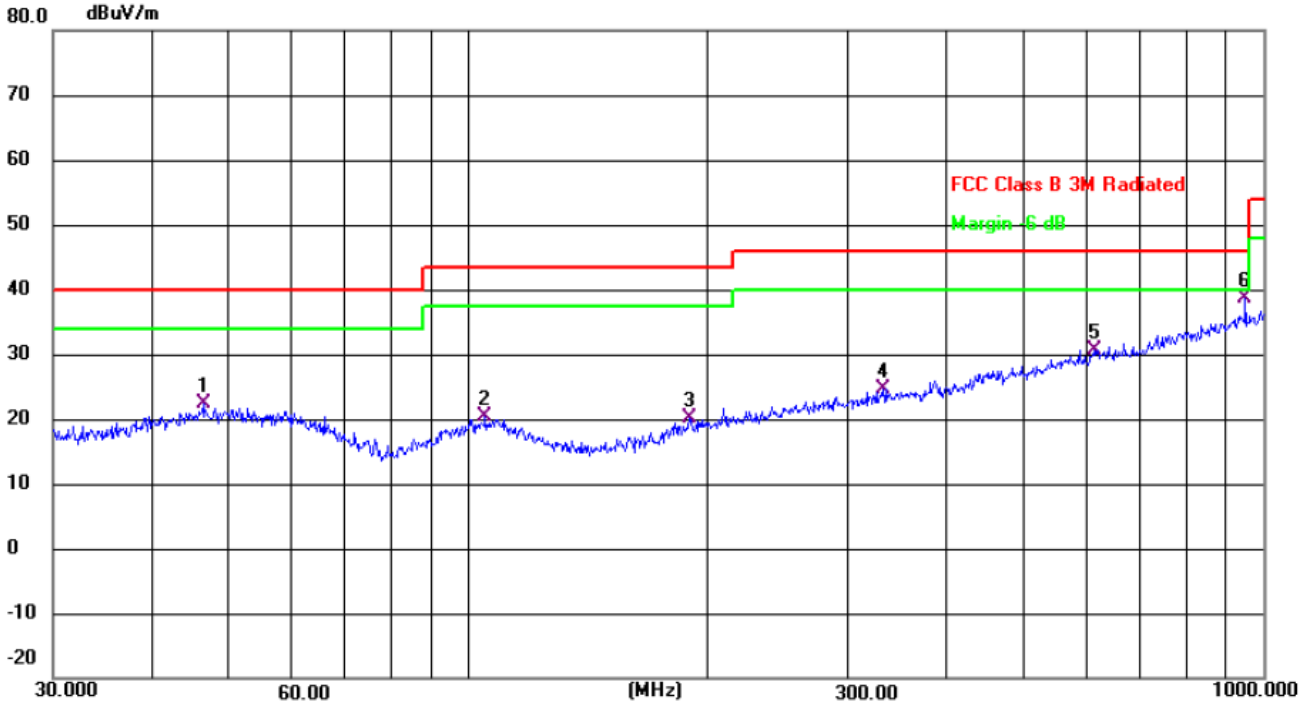

No.	Mk.	Freq.	Reading Level	Correct Factor	Measure-ment	Limit	Margin	
		MHz	dBuV	dB	dBuV/m	dB/m	dB	Detector
1		46.3402	28.84	-6.44	22.40	40.00	-17.60	QP
2		104.9033	28.79	-8.31	20.48	43.50	-23.02	QP
3		189.7385	29.71	-9.46	20.25	43.50	-23.25	QP
4		332.5187	30.01	-5.46	24.55	46.00	-21.45	QP
5		612.0642	29.59	1.10	30.69	46.00	-15.31	QP
6	*	948.7610	33.21	5.51	38.72	46.00	-7.28	QP

Remark:

Correct Factor = Cable loss + Antenna factor – Preamplifier;

Level = Reading Level + Correct Factor; Margin = Level - Limit;

3.2.8 TEST RESULTS (1GHZ~25GHZ)

GFSK

Polar (H/V)	Frequency (MHz)	Meter Reading (dBuV)	Pre-amplifier (dB)	Cable Loss (dB)	Antenna Factor (dB/m)	Emission Level (dBuV/m)	Limits (dBuV/m)	Margin (dB)	Detector Type
operation frequency:2402									
V	2402.00	113.36	52.16	2.78	27.41	91.39	114	-22.61	PK
V	2402.00	105.68	52.16	2.78	27.41	83.71	94	-10.29	AV
V	4804.00	77.41	51.74	3.08	31.25	60	74	-14	PK
V	4804.00	60.28	51.74	3.08	31.25	42.87	54	-11.13	AV
V	16132.00	54.66	51.56	7.36	41.57	52.03	74	-21.97	PK
H	2402.00	113.65	52.16	2.78	27.41	91.68	114	-22.32	PK
H	2402.00	104.51	52.16	2.78	27.41	82.54	94	-11.46	AV
H	4804.00	76.85	51.74	3.08	31.25	59.44	74	-14.56	PK
H	4804.00	59.26	51.74	3.08	31.25	41.85	54	-12.15	AV
H	16132.00	55.52	51.56	7.36	41.57	52.89	74	-21.11	PK
operation frequency:2441									
V	2441.00	112.21	52.11	2.82	27.47	90.39	114	-23.61	PK
V	2441.00	105.69	52.11	2.82	27.47	83.87	94	-10.13	AV
V	4882.00	77.44	51.77	3.03	31.34	60.04	74	-13.96	PK
V	4882.00	60.88	51.77	3.03	31.34	43.48	54	-10.52	AV
V	16132.00	54.36	51.56	7.36	41.57	51.73	74	-22.27	PK
H	2441.00	112.51	52.11	2.82	27.47	90.69	114	-23.31	PK
H	2441.00	104.85	52.11	2.82	27.47	83.03	94	-10.97	AV
H	4882.00	76.63	51.77	3.03	31.34	59.23	74	-14.77	PK
H	4882.00	59.41	51.77	3.03	31.34	42.01	54	-11.99	AV
H	16132.00	55.19	51.56	7.36	41.57	52.56	74	-21.44	PK
operation frequency:2480									
V	2480.00	113.52	52.23	2.86	27.44	91.59	114	-22.41	PK
V	2480.00	106.56	52.23	2.86	27.44	84.63	94	-9.37	AV
V	4960.00	78.85	51.69	3.05	31.39	61.6	74	-12.4	PK
V	4960.00	60.66	51.69	3.05	31.39	43.41	54	-10.59	AV
V	16132.00	54.84	51.56	7.36	41.57	52.21	74	-21.79	PK
H	2480.00	113.21	52.23	2.86	27.44	91.28	114	-22.72	PK
H	2480.00	105.63	52.23	2.86	27.44	83.7	94	-10.3	AV
H	4960.00	77.85	51.69	3.05	31.39	60.6	74	-13.4	PK
H	4960.00	59.63	51.69	3.05	31.39	42.38	54	-11.62	AV
H	16132.00	54.37	51.56	7.36	41.57	51.74	74	-22.26	PK

Remark:

1. Emission Level = Meter Reading + Antenna Factor + Cable Loss – Pre-amplifier,
   Margin= Emission Level - Limit
2. If peak below the average limit, the average emission was no test.
3. The amplitude of spurious emissions which are attenuated by more than 20dB below the permissible value has no need to be reported.

PI/4 DQPSK

Polar (H/V)	Frequency (MHz)	Meter Reading (dBuV)	Pre-amplifier (dB)	Cable Loss (dB)	Antenna Factor (dB/m)	Emission Level (dBuV/m)	Limits (dBuV/m)	Margin (dB)	Detector Type
operation frequency:2402									
V	2402.00	113.21	52.16	2.78	27.41	91.24	114	-22.76	PK
V	2402.00	103.66	52.16	2.78	27.41	81.69	94	-12.31	AV
V	4804.00	77.85	51.74	3.08	31.25	60.44	74	-13.56	PK
V	4804.00	61.61	51.74	3.08	31.25	44.2	54	-9.8	AV
V	16132.00	54.97	51.56	7.36	41.57	52.34	74	-21.66	PK
H	2402.00	113.63	52.16	2.78	27.41	91.66	114	-22.34	PK
H	2402.00	106.75	52.16	2.78	27.41	84.78	94	-9.22	AV
H	4804.00	79.64	51.74	3.08	31.25	62.23	74	-11.77	PK
H	4804.00	53.85	51.74	3.08	31.25	36.44	54	-17.56	AV
H	16132.00	54.69	51.56	7.36	41.57	52.06	74	-21.94	PK
operation frequency:2441									
V	2441.00	112.21	52.11	2.82	27.47	90.39	114	-23.61	PK
V	2441.00	105.64	52.11	2.82	27.47	83.82	94	-10.18	AV
V	4882.00	77.56	51.77	3.03	31.34	60.16	74	-13.84	PK
V	4882.00	61.74	51.77	3.03	31.34	44.34	54	-9.66	AV
V	16132.00	55.65	51.56	7.36	41.57	53.02	74	-20.98	PK
H	2441.00	112.36	52.11	2.82	27.47	90.54	114	-23.46	PK
H	2441.00	105.21	52.11	2.82	27.47	83.39	94	-10.61	AV
H	4882.00	76.67	51.77	3.03	31.34	59.27	74	-14.73	PK
H	4882.00	60.66	51.77	3.03	31.34	43.26	54	-10.74	AV
H	16132.00	55.85	51.56	7.36	41.57	53.22	74	-20.78	PK
operation frequency:2480									
V	2480.00	113.85	52.23	2.86	27.44	91.92	114	-22.08	PK
V	2480.00	105.23	52.23	2.86	27.44	83.3	94	-10.7	AV
V	4960.00	77.91	51.69	3.05	31.39	60.66	74	-13.34	PK
V	4960.00	60.89	51.69	3.05	31.39	43.64	54	-10.36	AV
V	16132.00	54.85	51.56	7.36	41.57	52.22	74	-21.78	PK
H	2480.00	113.41	52.23	2.86	27.44	91.48	114	-22.52	PK
H	2480.00	104.16	52.23	2.86	27.44	82.23	94	-11.77	AV
H	4960.00	76.85	51.69	3.05	31.39	59.6	74	-14.4	PK
H	4960.00	59.16	51.69	3.05	31.39	41.91	54	-12.09	AV
H	16132.00	55.52	51.56	7.36	41.57	52.89	74	-21.11	PK

Remark:

1. Emission Level = Meter Reading + Antenna Factor + Cable Loss – Pre-amplifier,
   Margin= Emission Level - Limit
2. If peak below the average limit, the average emission was no test.
3. The amplitude of spurious emissions which are attenuated by more than 20dB below the permissible value has no need to be reported.

3.3 RADIATED BAND EMISSION MEASUREMENT

3.3.1 TEST REQUIREMENT:

FCC Part15 C Section 15.209 and 15.205

LIMITS OF RADIATED EMISSION MEASUREMENT (Above 1000MHz)

FREQUENCY (MHz)	Limit (dBuV/m) (at 3M)	
	PEAK	AVERAGE
Above 1000	74	54

Notes:

(1) The limit for radiated test was performed according to FCC PART 15C.

(2) The tighter limit applies at the band edges.

(3) Emission level (dBuV/m)=20log Emission level (uV/m).

Spectrum Parameter	Setting
Attenuation	Auto
Start Frequency	2300MHz
Stop Frequency	2520MHz
RB / VB (emission in restricted band)	1 MHz / 1 MHz for Peak, 1 MHz / 10Hz for Average

3.3.2 TEST PROCEDURE

Above 1GHz test procedure as below:

a. 1. The EUT was placed on the top of a rotating table 1.5 meters above the ground at a 3 meter camber. The table was rotated 360 degrees to determine the position of the highest radiation.

b. The EUT was set 3 meters away from the interference-receiving antenna, which was mounted on the top of a variable-height antenna tower.

c. The antenna height is varied from one meter to four meters above the ground to determine the maximum value of the field strength. Both horizontal and vertical polarizations of the antenna are set to make the measurement.

d. For each suspected emission, the EUT was arranged to its worst case and then the antenna was tuned to heights from 1 meter to 4 meters and the rota table was turned from 0 degrees to 360 degrees to find the maximum reading.

e. The test-receiver system was set to Peak Detect Function and Specified Bandwidth with Maximum Hold Mode.

f. If the emission level of the EUT in peak mode was 10dB lower than the limit specified, then testing could be stopped and the peak values of the EUT would be reported. Otherwise the emissions that did not have 10dB margin would be re-tested one by one using peak, quasi-peak or average method as specified and then reported in a data sheet.

g. Test the EUT in the lowest channel,the Highest channel

Note:

Both horizontal and vertical antenna polarities were tested
and performed pretest to three orthogonal axis. The worst case emissions were reported

3.3.3 DEVIATION FROM TEST STANDARD

No deviation

3.3.4 TEST SETUP

Radiated Emission Test-Up Frequency Above 1GHz

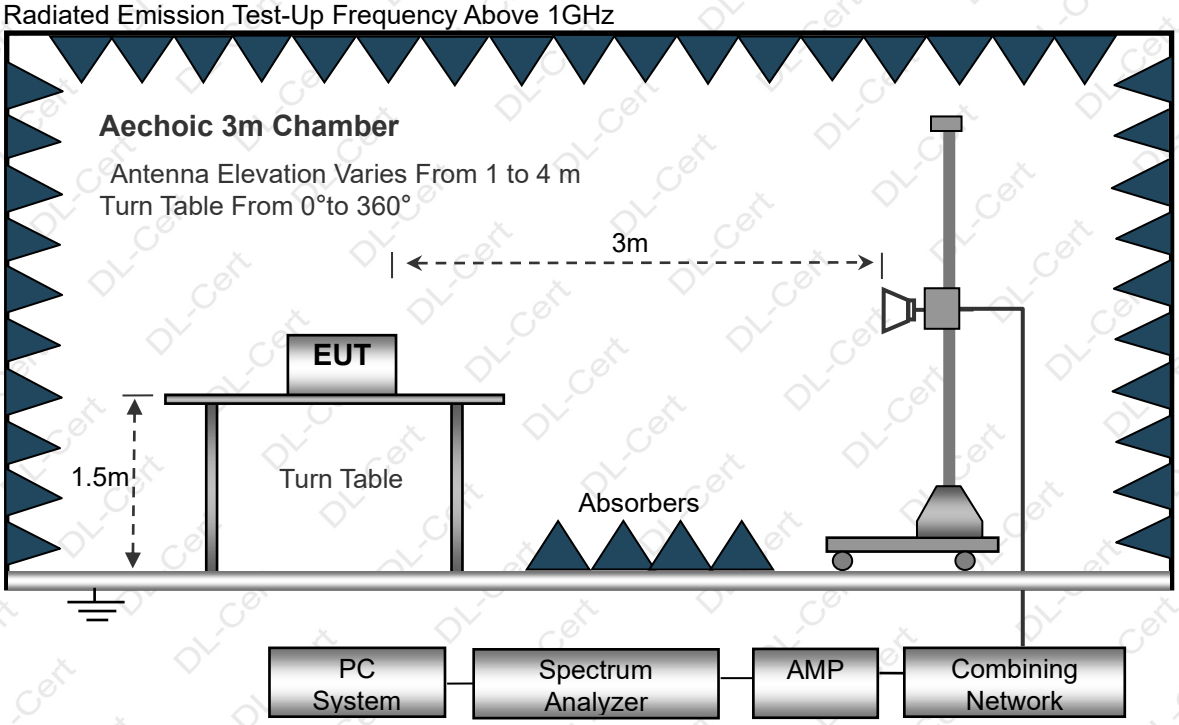

3.3.5 EUT OPERATING CONDITIONS

The EUT tested system was configured as the statements of 2.3 Unless otherwise a special operating condition is specified in the follows during the testing.

3.3.6 TEST RESULT

GFSK

Polar (H/V)	Frequency (MHz)	Meter Reading (dBuV)	Pre-amplifier (dB)	Cable Loss (dB)	Antenna Factor (dB/m)	Emission Level (dBuV/m)	Limits (dBuV/m)	Margin (dB)	Detector Type
operation frequency:2402									
V	2390.00	76.68	52.12	2.73	27.38	54.67	74	-19.33	PK
V	2390.00	65.74	52.12	2.73	27.38	43.73	54	-10.27	AV
V	2400.00	77.83	52.16	2.78	27.41	55.86	74	-18.14	PK
V	2400.00	65.52	52.16	2.78	27.41	43.55	54	-10.45	AV
H	2390.00	77.69	52.12	2.73	27.38	55.68	74	-18.32	PK
H	2390.00	65.21	52.12	2.73	27.38	43.2	54	-10.8	AV
H	2400.00	76.87	52.16	2.78	27.41	54.9	74	-19.1	PK
H	2400.00	65.69	52.16	2.78	27.41	43.72	54	-10.28	AV

Polar (H/V)	Frequency (MHz)	Meter Reading (dBuV)	Pre-amplifier (dB)	Cable Loss (dB)	Antenna Factor (dB/m)	Emission Level (dBuV/m)	Limits (dBuV/m)	Margin (dB)	Detector Type
operation frequency:2480									
V	2483.50	75.25	52.23	2.86	27.44	53.32	74	-20.68	PK
V	2483.50	66.31	52.23	2.86	27.44	44.38	54	-9.62	AV
V	2500.00	75.19	52.26	2.88	27.49	53.3	74	-20.7	PK
V	2500.00	65.52	52.26	2.88	27.49	43.63	54	-10.37	AV
H	2483.50	75.27	52.23	2.86	27.44	53.34	74	-20.66	PK
H	2483.50	64.66	52.23	2.86	27.44	42.73	54	-11.27	AV
H	2500.00	75.88	52.26	2.88	27.49	53.99	74	-20.01	PK
H	2500.00	66.41	52.26	2.88	27.49	44.52	54	-9.48	AV

Remark:

1. Emission Level = Meter Reading + Antenna Factor + Cable Loss – Pre-amplifier,
   Margin= Emission Level - Limit
2. If peak below the average limit, the average emission was no test.
3. The amplitude of spurious emissions which are attenuated by more than 20dB below the permissible value has no need to be reported.

PI/4 DQPSK

Polar (H/V)	Frequency (MHz)	Meter Reading (dBuV)	Pre-amplifier (dB)	Cable Loss (dB)	Antenna Factor (dB/m)	Emission Level (dBuV/m)	Limits (dBuV/m)	Margin (dB)	Detector Type
operation frequency:2402									
V	2390.00	76.39	52.12	2.73	27.38	54.38	74	-19.62	PK
V	2390.00	65.84	52.12	2.73	27.38	43.83	54	-10.17	AV
V	2400.00	76.14	52.16	2.78	27.41	54.17	74	-19.83	PK
V	2400.00	64.56	52.16	2.78	27.41	42.59	54	-11.41	AV
H	2390.00	76.85	52.12	2.73	27.38	54.84	74	-19.16	PK
H	2390.00	65.23	52.12	2.73	27.38	43.22	54	-10.78	AV
H	2400.00	76.52	52.16	2.78	27.41	54.55	74	-19.45	PK
H	2400.00	65.64	52.16	2.78	27.41	43.67	54	-10.33	AV

Polar (H/V)	Frequency (MHz)	Meter Reading (dBuV)	Pre-amplifier (dB)	Cable Loss (dB)	Antenna Factor (dB/m)	Emission Level (dBuV/m)	Limits (dBuV/m)	Margin (dB)	Detector Type
operation frequency:2480									
V	2483.50	76.21	52.23	2.86	27.44	54.28	74	-19.72	PK
V	2483.50	65.13	52.23	2.86	27.44	43.2	54	-10.8	AV
V	2500.00	76.85	52.26	2.88	27.49	54.96	74	-19.04	PK
V	2500.00	65.63	52.26	2.88	27.49	43.74	54	-10.26	AV
H	2483.50	76.52	52.23	2.86	27.44	54.59	74	-19.41	PK
H	2483.50	65.27	52.23	2.86	27.44	43.34	54	-10.66	AV
H	2500.00	76.36	52.26	2.88	27.49	54.47	74	-19.53	PK
H	2500.00	65.78	52.26	2.88	27.49	43.89	54	-10.11	AV

Remark:

1. Emission Level = Meter Reading + Antenna Factor + Cable Loss – Pre-amplifier,
   Margin= Emission Level - Limit
2. If peak below the average limit, the average emission was no test.
3. The amplitude of spurious emissions which are attenuated by more than 20dB below the permissible value has no need to be reported.

4. BANDWIDTH TEST

4.1 APPLIED PROCEDURES / LIMIT

FCC Part15 (15.215) , Subpart C	
Section	Test Item
15.215	Bandwidth

4.1.1 TEST PROCEDURE

1. Set RBW = 30 kHz.
2. Set the video bandwidth (VBW) ≥RBW.
3. Detector = Peak.
4. Trace mode = max hold.
5. Sweep = auto couple.
6. Allow the trace to stabilize.
7. Measure the maximum width of the emission that is constrained by the frequencies associated with the two outermost amplitude points (upper and lower frequencies) that are attenuated by 20 dB relative to the maximum level measured in the fundamental emission.

4.1.2 DEVIATION FROM STANDARD

No deviation.

4.1.3 TEST SETUP

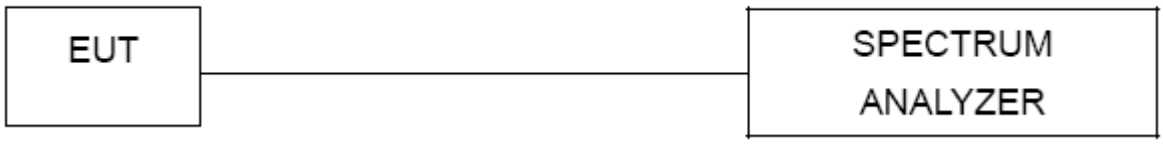

4.1.4 EUT OPERATION CONDITIONS

The EUT tested system was configured as the statements of 2.3 Unless otherwise a special operating condition is specified in the follows during the testing.

4.1.5 TEST RESULTS

Temperature:	25℃	Relative Humidity:	60%
Pressure:	1012 hPa	Test Voltage :	DC 3.7V
Test Mode :	TX Mode /CH00, CH39, CH78		

	Frequency (MHz)	20dB Bandwidth (MHz)	Result
GFSK	2402	0.982	Pass
	2441	0.980	Pass
	2480	0.929	Pass
PI/4 DQPSK	2402	1.267	Pass
	2441	1.276	Pass
	2480	1.265	Pass

GFSK	PI/4 DQPSK
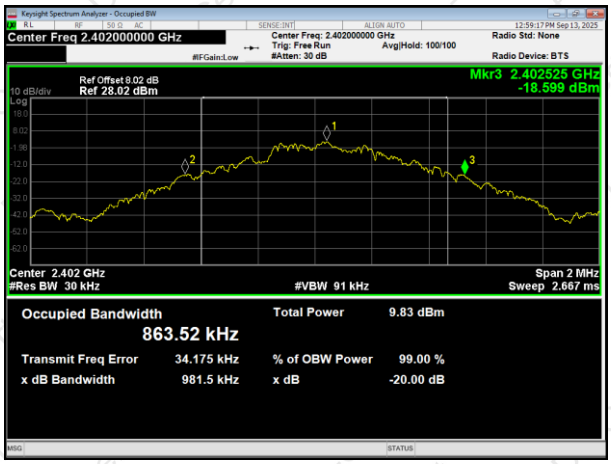	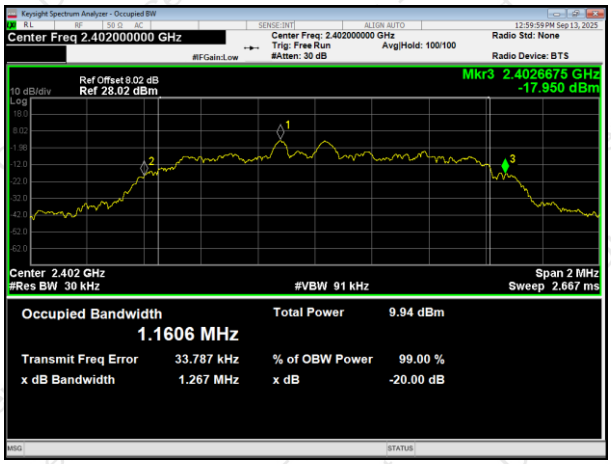
2402MHz	2402MHz
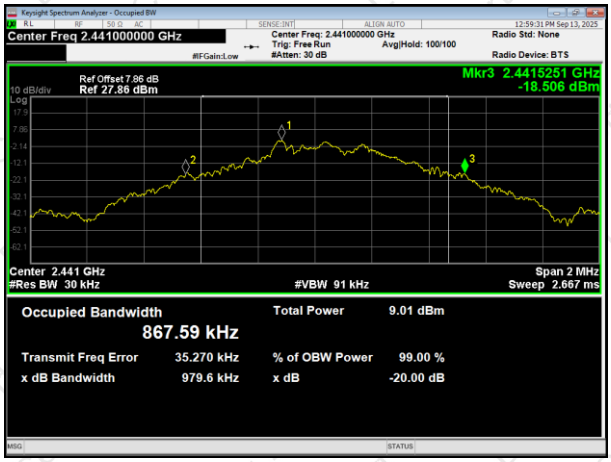	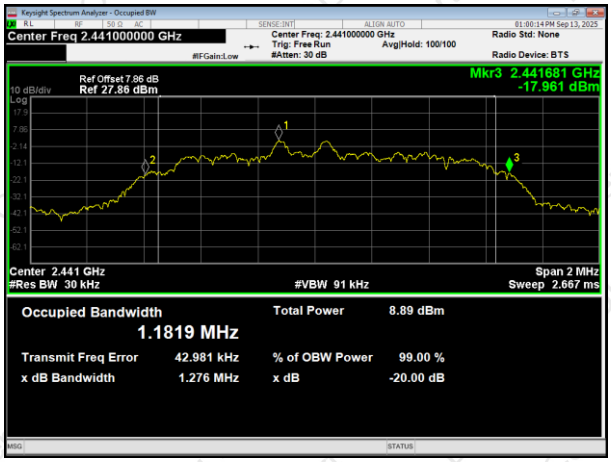
2441MHz	2441MHz
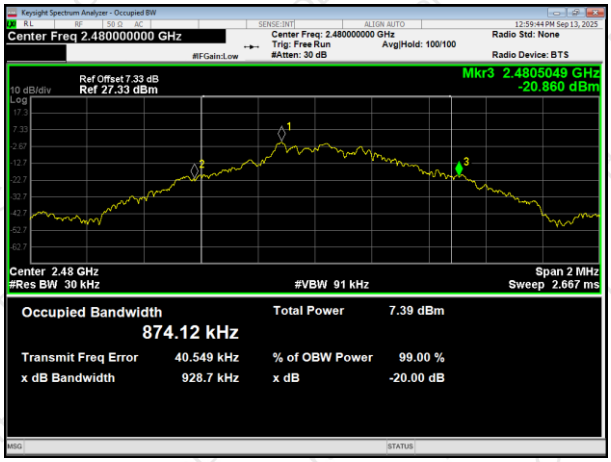	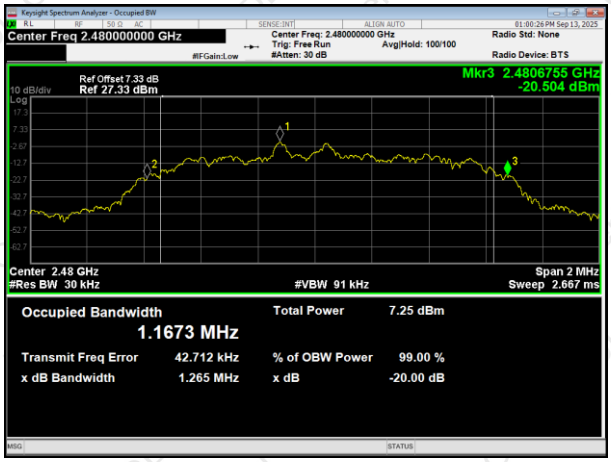
2480MHz	2480MHz

5. ANTENNA REQUIREMENT

5.1 STANDARD REQUIREMENT

15.203 requirement: For intentional device, according to 15.203: an intentional radiator shall be designed to ensure that no antenna other than that furnished by the responsible party shall be used with the device.

5.2 EUT ANTENNA

The EUT antenna is Internal Antenna. It comply with the standard requirement.

6. TEST SEUUP PHOTO

Reference to the appendix I for details.

7. EUT PHOTO

Reference to the appendix II for details.

※※※※※ **END OF REPORT** ※※※※※