产品规格承认书

Product Specification Approval

产品名称（Product Name）	蓝牙开关模块	
产品型号（Product Number）	DL-BTSW	
客 户 名（Customer Name）		
客户料号（Customer P/N）		
送样日期 Sample delivery date	版次 Version	文件编号 Document No.
	A2	
编制(Prepared by)	核准(Approved)	审核(Audit)
莫业鹏	杨伟滈	闫连红

客户确认栏 Customer Confirmation Column

确认意见 Confirm opinion：

客户签章 Customer signature:

日期 Date:

注意（Notice）：

1.收到样机确认 OK 后请及时回签，7 天内没有回签及问题反馈，我司默认客户测试合格；规格书中的图片为通用机型图片，可能与送样样机有差异，此份规格书达锂电子保留最终解释权

After receiving the prototype confirmation, please sign back in time. If there is no sign back and problem feedback within 7 days, our company defaults that the customer test is qualified; Supplier reserves the right of final interpretation of this specification.

2.客户批量前，请在规格书中签字回传，并说明详细功能说明，我司才安排批量

Before the customer batches, please sign the specification and return it, and explain the detailed function description, and our company will arrange the batch

产品修订记录

Product revision record

日期 Date	版 本 号 Ver.	修订说明 Revision note	制定人 Made by	核准人 authorizer
2024-11-06	A0	初版发行 Initial release	莫业鹏	杨伟滈
2024-12-27	A1	1、修正 LED 指示说明 Fixed LED instruction 2、更新注意事项 Update Precaution	莫业鹏	杨伟滈
2026-2-3	A2	尺寸新增螺母扭矩为：5~6N.m	黄燕珊	蒋慧明

目录 Content

产品规格承认书 Product Specification Approval 1

产品修订记录 Product revision record 2

1. 简介 Brief introduction 4

2. 系统框图 system chart 4

3. 配置&参数 Configuration & parameters 4

4. 尺寸图参考 Dimensional drawing reference 5

5. 产品图参考 Product picture reference 5

6. LED 指示说明 LED instruction 6

7. 按键说明 Button description 6

8. 接线说明 Cable connection instructions 7

9. Smart BMS 7

10. 接口定义 Interface definition 8

11. 休眠与唤醒 Sleep and wake up 9

12. 线材说明 Wire specification 9

13. 注意事项 Precaution 9

1. 简介 Brief introduction

- DL-BTSW 是一款集成按键唤醒功能、按键强启功能、指示灯功能于一体的低功耗蓝牙产品，简称蓝牙开关模块；它支持达锂家族多款产品，包括启动板、智能保护板 HKMS、R32D 等；它顶部满足 IP54 的防尘防水要求，加上精致的外观，相对于传统的达锂蓝牙产品，它更适用于装在电池箱外；
- DL-BTSW is an integrated key wake-up function, key force start function, indicator function in one of the low-power Bluetooth product, referred to as Bluetooth switch module; It is compatible with a series of DALY products., including car starting BMS, HKMS smart BMS, R32D, etc. Its top meets the dust-proof and waterproof requirements of IP54, and it has exquisite appearance. Hence, compared with ordinary DALY bluetooth，it is more suitable to be installed outside the battery casing.

2. 系统框图 system chart

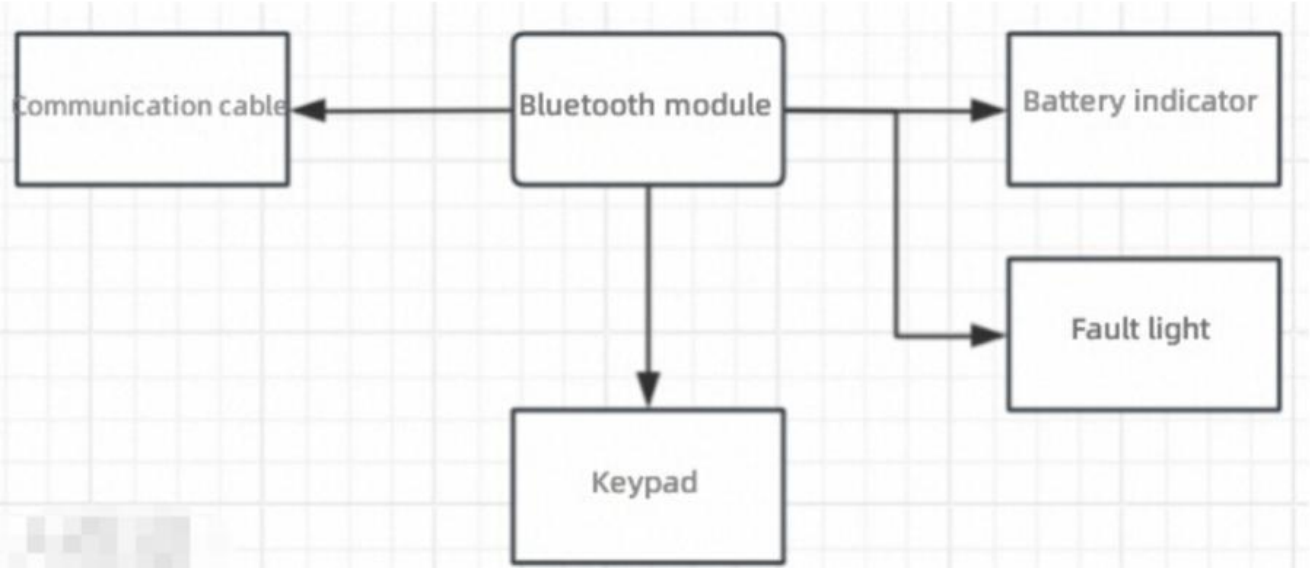

3. 配置&参数 Configuration & parameters

内容 Item	说明 description
LED 绿灯 Green LED	2pcs
LED 红灯 RED LED	2pcs
工作自耗电 Operating power consumption	＜7mA
休眠自耗电 sleep mode consumption	＜5uA
重量 Weight（含通讯线 Included communication cable）	26g±3g

4. 尺寸图参考 Dimensional drawing reference

尺寸 Dimensions	直径*高（mm）Diameter * High (mm)=φ33±0.1*10.9±0.1 请注意：1、需预留空间，用于连接线/螺母的安装；2、安装板厚最大 2.5mm，安装孔直径 29.5mm； 3、螺母扭矩为：5~6N.m； Please note: 1, need to reserve space for the installation of the cable/nut; 2, the maximum thickness of the mounting plate 2.5mm, the diameter of the mounting hole 29.5mm; 3、The tightening torque for the nut shall be 5 to 6 N·m;

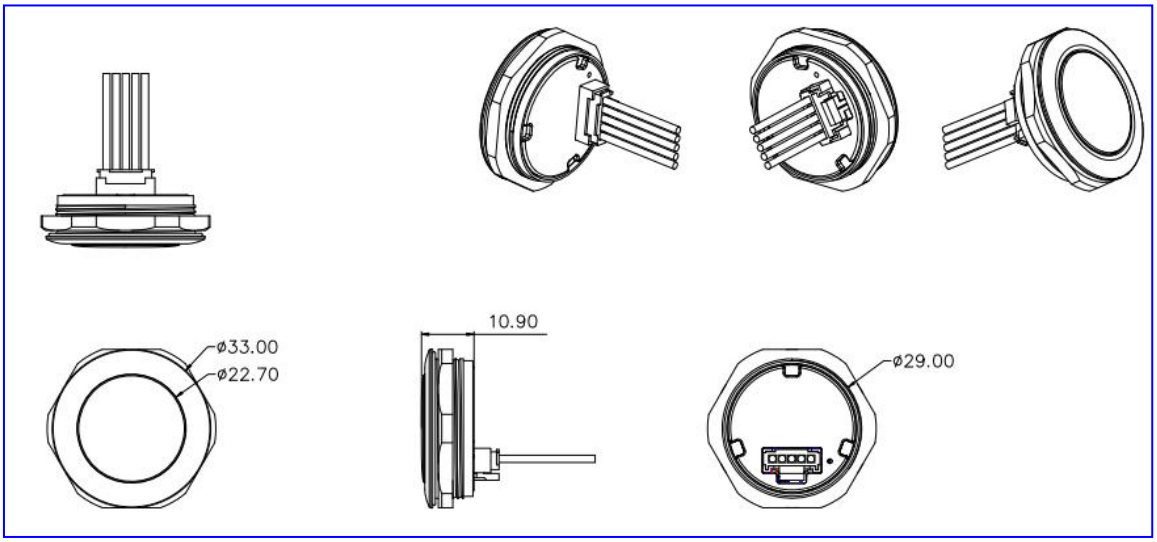

5. 产品图参考 Product picture reference

6. LED 指示说明 LED instruction

板型 plate shape	绿灯 Green LED	红灯 Red LED	定义 definition	描述 Description
启动板 Starting plate	交替闪 3 次，共 3s； Blink alternately 3 times for a total of 3s		开机 power on	上电开机提示 Power-on prompts
	亮 30s On 30s	灭 Off	静置 standing	电池电量≥10%，且保护板正常工作； Battery power ≥10%, and the protection board is working normally;
	灭 Off	亮 30s On 30s	故障 fault	电池电量＜10%，或者保护板触发了强故障&保护状态； Battery level ＜ 10%, or the protection board triggered a strong fault & protection state;
	灭 Off	灭 Off	休眠 Sleep	LED 灯显示任务完成后会直接熄灭，可单击按键唤醒 LED 灯； The LED light will be turned off directly after the completion of the task, you can click the button to wake up the LED light;
	闪 60s Flash 60s	灭 Off	强启 Force start	启动板进入强启状态（进入条件：按键短按 3 到 5s） The car starting BMS activate force starting mode (entry condition: press the button for 3 to 5s)
	灭 Off	闪 0.5s 2 次 Flash 0.5s 2times	关机 Shutdown	启动板关机（进入条件：按键长按 10 到 12s；注意：需要按键才能唤醒） The car starting BMS shutdown (entry condition: press the button for 10~12s; Note:press button to wake up)
HKMSD	交替闪 3 次，共 3s； Blink alternately 3 times for a total of 3s		开机 power on	上电开机提示 Power-on prompts
	亮 30s On 30s	灭 Off	静置 standing	电池电量≥10%，且保护板正常工作； Battery power ≥10%, and the protection board is working normally;
	灭 Off	亮 30s On 30s	故障 Breakdown	电池电量＜10%，或者保护板触发了强故障&保护状态； Battery power＜ 10%, or the BMS triggers a severe fault & protection mode;
	灭 Off	灭 Off	BTSW 休眠 BTSW Sleep	LED 灯显示任务完成后会直接熄灭，可单击按键唤醒 LED 灯； The LED light will be turned off directly after the completion of the task, you can click the button to wake up the LED light;
	灭 Off	闪 0.5s 2 次 Flash 0.5s 2times	休眠 Sleep	BMS 休眠（进入条件：按键长按 10 到 12s） BMS shutdown (entry condition: press the button for 10~12s)

7. 按键说明 Button description

按键操作 Button operation	**说明 description**	**备注 Remark**
单击 Click	点亮 LED 灯，激活蓝牙、保护板； Light LED light, activate Bluetooth、BMS;	/
短按 3~5s Short press 3~5s	启动板进入强启模式 The car starting BMS enters the forced start mode	仅启动板有此功能； Only the car starting BMS has this function.

长按 10s Long press 10s	启动板关机 Starting plate shutdown	需要按键才能唤醒； press button to wake up
长按 10s Long press 10s	BMS 休眠 BMS sleep	/

8. 接线说明 Cable connection instructions

请使用专用通讯线，将本蓝牙开关模块与对应的保护板连接；

Please use special communication cable to connect the Bluetooth switch module to the corresponding BMS;

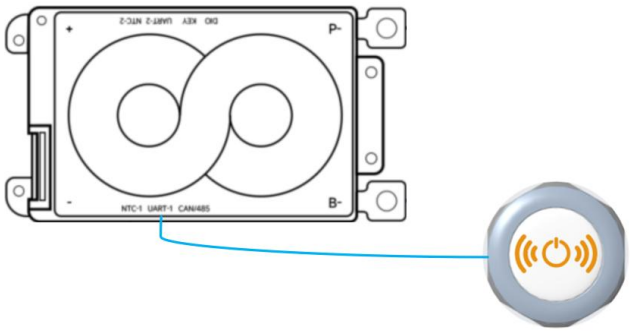

9. Smart BMS

下载 Download: https://www.databms.com/App

APP 界面参考——登录　APP interface reference -- Login

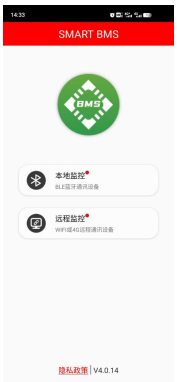

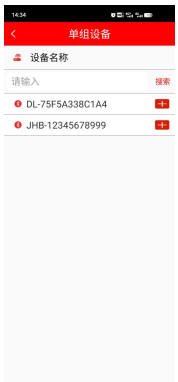

APP 界面参考——实时状态

APP interface reference -- real-time status

APP 界面参考——主动均衡

APP interface reference -- Active balancing

APP 界面参考——参数设置　APP interface reference -- Parameter Settings

10. 接口定义 Interface definition

UART 接口 UART interface	1	GND	地 GND
	2	S1	激活按键　Activate key
	3	VCC	供电电源 3.3V　Power supply 3.3V
	4	RX	通讯接收端 Communication receiver
	5	TX	通讯发送端 Communication sending terminal

11. 休眠与唤醒 Sleep and wake up

休眠：与 APP 无连接通讯，且无按键动作 10s 后，蓝牙开关模块进入休眠

Sleep: When there is no communication with the APP and no key action is performed for 10s, DL-BTSW goes to sleep.

唤醒：通过按键来唤醒蓝牙开关模块或者通过 APP 连接通讯来唤醒蓝牙开关模块

（注意：启动板关机时，必须通过按键才能唤醒）

Wake up: Wake up DL-BTSW by pressing a button or by connecting the APP to communicate.

(Note: When the Starting plate shuts down, it must be awakened by pressing the button)

12. 线材说明 Wire specification

线材名称 Name of cable	默认规格 Default specification	数量 Qty	备注 remark
通讯线 1 Cable 1 of communication	连接线_按键蓝牙(5 芯线)_GH1.25-6P 转 PH2.0_450mm Cable _ Key Bluetooth (5 core wire)_GH1.25-6P to PH2.0_450mm	1pcs	选配 Optional
通讯线 2 Cable 2 of communication	连接线_按键蓝牙(5 芯线)_PHB2.0-6P 转 PHB2.0-5P_450mm Cable _ Key Bluetooth (5-core cable)_PHB2.0-6P to PHB2.0-5P_450mm	1pcs	选配 Optional

13. 注意事项 Precaution

①蓝牙开关模块，底部不防水，建议底部密封在箱体内部

The bottom of DL-BTSW is not waterproof, it is recommended to seal the bottom inside the box.

②蓝牙固件本身升级的相关事项，如需进行升级，请联系售后；

If you need to upgrade Bluetooth firmware , please contact the after-sales;

③搭配蓝牙开关模块使用时，BMS 休眠时间需设置≥60s；

When used with DL-BTSW, the BMS sleep time should be set to ≥ 60s.

④使用上位机升级 BMS 时，建议移除蓝牙开关模块；

When upgrading the BMS through PCMaster, it is recommended to remove DL-BTSW from the BMS.

⑤搭配 BMS 使用时，需要将 BMS 升级到最新基版本

When using with BMS, you need to upgrade the BMS to the latest base version.

14. 声明 FCC Statement

1. 本设备符合美国联邦通信委员会（FCC）规则第 15 部分的规定。设备运行需遵守以下两个条件：

(1) 本设备不得产生有害干扰。

(2) 本设备必须接受所接收到的任何干扰，包括可能导致设备非正常工作的干扰。

2. 未经合规责任方明确批准，擅自对设备进行更改或改装，可能导致用户被取消操作该设备的权限。

注意：本设备已通过测试，证实符合 FCC 规则第 15 部分中关于 B 类数字设备的限制要求。这些限制旨在为住宅安装环境提供合理的防护，避免有害干扰。

本设备会产生、使用并可能辐射射频能量。若未按照说明书安装和使用，可能会对无线电通信造成有害干扰。但这并不保证在特定安装环境下不会发生干扰。如果本设备确实对无线电或电视接收造成有害干扰（可通过开关设备进行判断），建议用户尝试采用以下一种或多种措施消除干扰：

- 重新调整接收天线的方向或位置。
- 增大本设备与接收器之间的距离。
- 将本设备连接到与接收器不同电路的电源插座上。
- 咨询经销商或有经验的无线电 / 电视技术人员获取帮助。

经评估，本设备符合通用射频辐射暴露要求。安装和使用本设备时，辐射体与人体之间应至少保持 20 厘米 的距离。

1. This device complies with Part 15 of the FCC Rules. Operation is subject to the following two conditions:

(1) This device may not cause harmful interference.

(2)This device must accept any interference received, including interference that may cause undesired operation.

2. Changes or modifications not expressly approved by the party responsible for compliance could void the user’s authority to operate the equipment.

Note: This equipment has been tested and found to comply with the limits for a class B digital device, pursuant to Part 15 of the FCC Rules. These limits are designed to provide reasonable protection against harmful interference in a residential installation.

This equipment generates uses and can radiate radio frequency energy and, if not installed and used in accordance with the instructions, may cause harmful interference to radio communications. However, there is no guarantee that interference will not occur in a particular installation. If this equipment does cause harmful interference to radio or television reception, which can be determined by turning the equipment off and on, the user is encouraged to try to correct the interference by one or more of the following measures:

- Reorient or relocate the receiving antenna.
- Increase the separation between the equipment and receiver.
- Connect the equipment into an outlet on a circuit different from that to which the receiver is connected.
- Consult the dealer or an experienced radio/TV technician for help.

The device has been evaluated to meet general RF exposure requirement. This equipment should be installed and operated with a minimum distance of 20 cm between the radiator and your body