INVERX

FAIRLAND®

# INVERTER POOL PUMP

## INSTALLATION AND OPERATION MANUAL

Follow this QR code for manual in other language

Suivez ce QR code pour consulter le manuel en francais

Volg deze QR-code om de handleiding in het Nederlands te raadplegen

Scannen Sie diesen QR-Code, um die deutsche Version des Handbuchs

# CONTENTS

1. ⚠ IMPORTANT SAFETY INSTRUCTIONS..... 1

2. TECHNICAL SPECIFICATIONS..... 3

3. OVERALL DIMENSION (mm)..... 3

4. INSTALLATION..... 4

5. SETTING AND OPERATION..... 6

6. EXTERNAL CONTROL..... 12

7. PROTECTION AND FAILURE..... 14

8. MAINTENANCE..... 17

9. WARRANTY & EXCLUSIONS..... 17

10. DISPOSAL..... 18

THANK YOU FOR PURCHASING OUR INVERTER POOL PUMPS.

THIS MANUAL CONTAINS IMPORTANT INFORMATION THAT WILL HELP YOU IN OPERATING AND MAINTAINING THIS PRODUCT.

PLEASE READ THE MANUAL CAREFULLY BEFORE INSTALLATION & OPERATION AND RETAIN IT FOR FUTURE REFERENCE.

# 1. ⚠ IMPORTANT SAFETY INSTRUCTIONS

This guide provides installation and operation instructions for this pump. If you have any other questions about this equipment, please consult your supplier.

When installing and using this electrical equipment, basic safety precautions should always be followed, including the following:

1.1 IEC

This appliance is not intended for use by persons (including children) with reduced physical, sensory or mental capabilities, or lack of experience and knowledge, unless they have been given supervision or instruction concerning use of the appliance by a person responsible for their safety.

Children should be supervised to ensure that they do not play with the appliance.

1.2 EN/UKCA

This appliance can be used by children aged from 8 years and above and persons with reduced physical, sensory or mental capabilities or lack of experience and knowledge if they have been given supervision or instruction concerning use of the appliance in a safe way and understand the hazards involved.

Children shall not play with the appliance.

Cleaning and users' maintenance shall not be made by children without supervision.

1.3 If the supply cord is damaged, it must be replaced by the manufacturer, its service agent or similarly qualified persons in order to avoid a hazard.

1.4 The pump must supplied through a residual current device (RCD) with a rated residual operating current ≤ 30 mA.

1.5 Electrical installation and include reference to national wiring rules.

1.6 Means for disconnection incorporated in fixed wiring in accordance with wiring rules.

1.7 Risk of electrical shock. Connect only to a branch circuit protected by a ground-fault circuit interrupter (GFCI). Contact a professionally trained and qualified electrician if you cannot verify that the circuit is protected by a GFCI.

1.8 To prevent the risk of electrical shock, please connect the ground wire on the motor (green/yellow) to the grounding system.

1.9 This pump is for use with permanently installed in-ground or above-ground swimming pools and may also

be used with hot tubs and spas with a water temperature under 50°C. Due to the fixed installation method, this pump is not suggested to be used on above-ground pools that can be readily disassembled for storage.

1.10 The pump is not submersible.

1.11 Never open the inside of the drive motor enclosure.

⚠ **WARNING:**

- Fill the pump with water before starting. Do not run the pump dry. In case of dry run, mechanical seal will be damaged and the pump will start leaking.
- Before servicing the pump, switch power OFF to the pump by disconnecting the main circuit to the pump and release all pressure from pump and piping system.
- Never tighten or loosen screws while the pump is operating.
- Ensure that the inlet and outlet of the pump are unblocked with foreign matter.

## 2. TECHNICAL SPECIFICATIONS

| Model | Advised Pool Volume ($m^3$) | P1 | Voltage (V/Hz) | Qmax ($m^3$/h) | Hmax (m) | Circulation ($m^3$/h) | |
|---|---|---|---|---|---|---|---|
| | | KW | | | | At 10m | At 8m |
| DE18 DV | 20-30 | 0.75 | 115-230V / 50/60Hz | 22.0 | 16.0 | 14.0 | 18.0 |
| DE22 DV | 20-40 | 1.00 | | 25.5 | 18.0 | 180 | 22.0 |
| DE27 DV | 30-50 | 1.35 | | 28.5 | 20.0 | 24.0 | 27.0 |
| DE28 DV | 30-50 | 1.50 | | 31.0 | 20.5 | 28.0 | 30.0 |
| DE36 DV | 30-50 | 1.50 | | 31.0 | 22.0 | 28.0 | 32.0 |
| DEX20 | 20-40 | 1.50 | | 31.0 | 25.0 | 36.0 | 40.0 |
| DEX25 | 20-40 | 1.50 | | 31.0 | 29.0 | 28.0 | 42.0 |

## 3. OVERALL DIMENSION (mm)

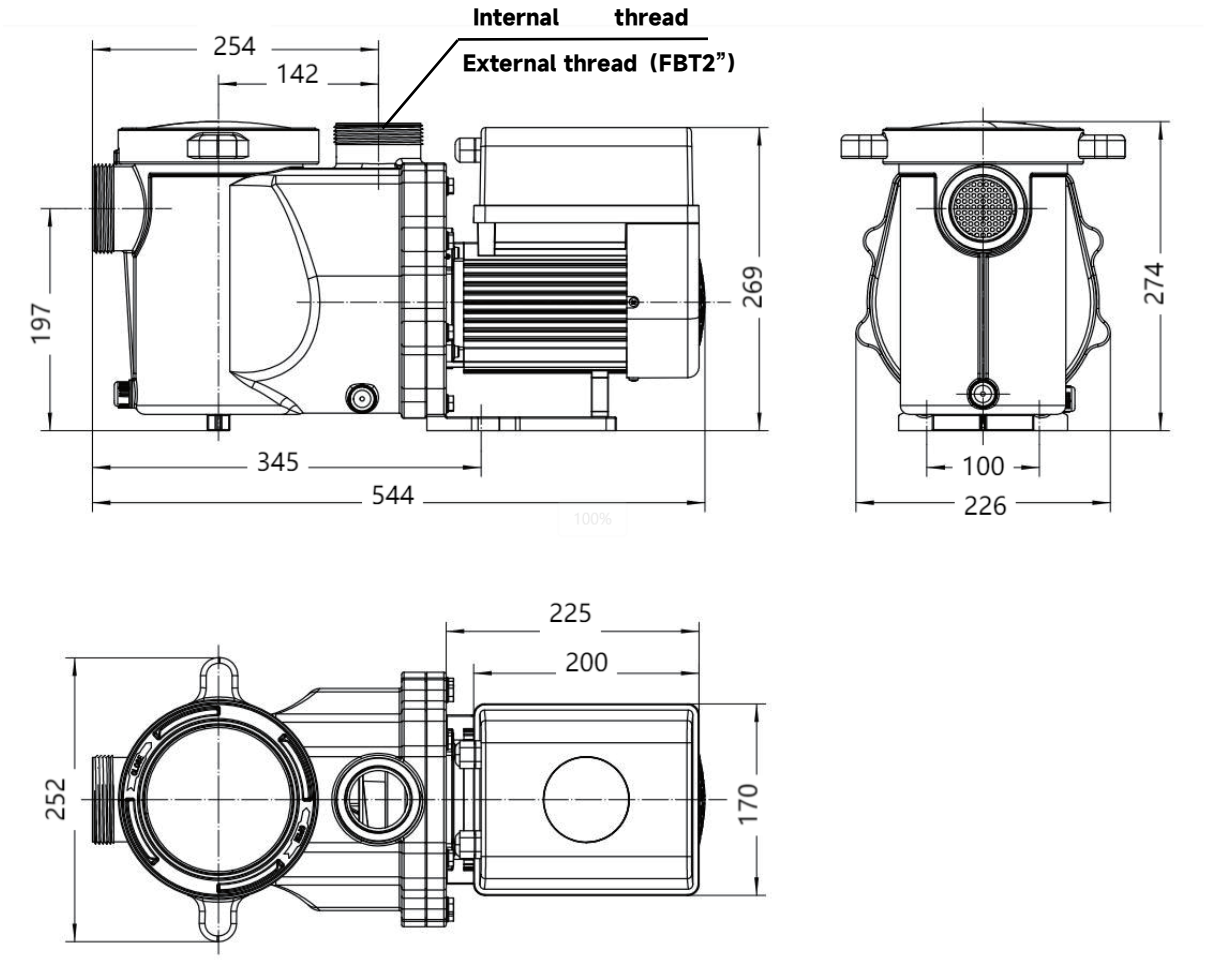


Figure 1 - Pump Dimensions

# 4. INSTALLATION

## 4.1. Pump Location

1) Install the pump as close to the pool as possible, to reduce friction loss and improve efficiency, use short, direct suction and return piping.
2) To avoid direct sunshine, heat or rain, it is recommended to place the pump indoors or in the shade.
3) DO NOT install the pump in a damp or non-ventilated location. Keep pump and motor at least 150mm away from obstacles, pump motors require free circulation of air for cooling.
4) The pump should be installed horizontally and fixed in the hole on the support with screws to prevent unnecessary noise and vibration.

## 4.2. Plumbing and Valves

1) The pump inlet/outlet union size: optional with 48.3/50/60.3/63mm.
2) For optimization of the pool plumbing, a larger pipe size should be used. It is recommended to use a pipe with size of 63mm.
3) When installing the inlet and outlet fittings (joints) with the pluming, use the special sealant for PVC material.
4) The dimension of suction line should be the same or larger than the inlet line diameter, to avoid pump sucking air, which will affect the pump's efficiency.
5) To reduce friction loss and improve efficiency, plumbing on the suction and return side should be short and direct.
6) Flooded suction systems should have valves installed in both the pump suction and return line, which is convenient for routine maintenance. A valve, elbow, or tee installed on the suction line should be no closer to the front of the pump than seven times the suction line diameter.
7) Use a check valve in the return line where there is a significant height between the return line and the outlet of the pump, to prevent the pump from the impact of medium recirculation and pump-stopping water hammer.

### 4.3. Fittings

1) Elbows should be no closer than 350mm to the inlet. Do not install 90° elbows directly into the pump inlet/outlet. This will help the pump prime faster and last longer.

2) Joints must be tight.

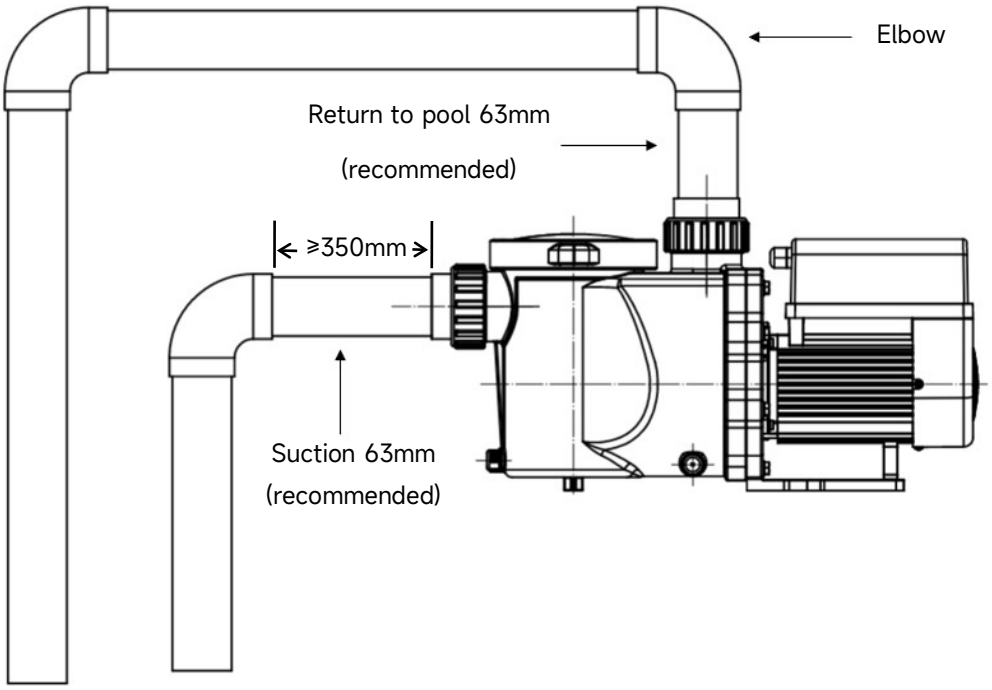


Figure 2 - Plumbing and Fittings installations

* The pump inlet/outlet union size: optional with 48.3/50/60.3/63mm

3) Use the UNION KIT supplied by the pump manufacturer (Refer to Figure 3). Do not use other fittings to connect the pump inlet/outlet, in case the fittings are not match and damage the pump body.

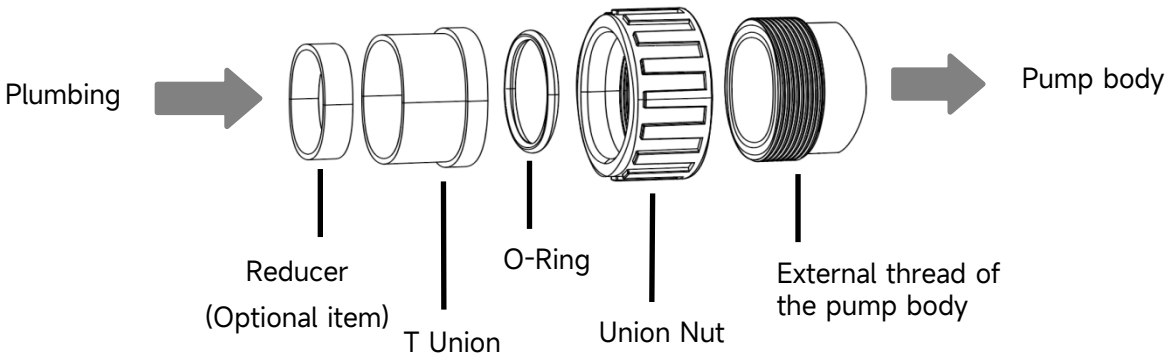


Figure 3 - Union Kit

### 4.4. Check before initial startup

1) Check whether the pump shaft rotates freely;

2) Check whether the power supply voltage and frequency conform to the nameplate;

3) Facing the fan blade, the direction of motor rotation should be clockwise;

4) It is forbidden to run the pump without water.

### 4.5. Application conditions

| | |
|---|---|
| Ambient temperature | Indoor installation, pump is intended for continuous operation at this temperature range: -10 - 42°C |
| Maximum water temperature | 50°C |
| Salt water available | Salt concentration up to 3.5%, i.e 35g/l |
| Humidity | ≤90% RH, （20°C±2°C） |
| Altitude | Not exceed 1000m above sea level |
| Installation | The pump can be installed max. 2m above water level |
| Protection | Class F, IP55 |

## 5. SETTING AND OPERATION

### 5.1. Display on control panel

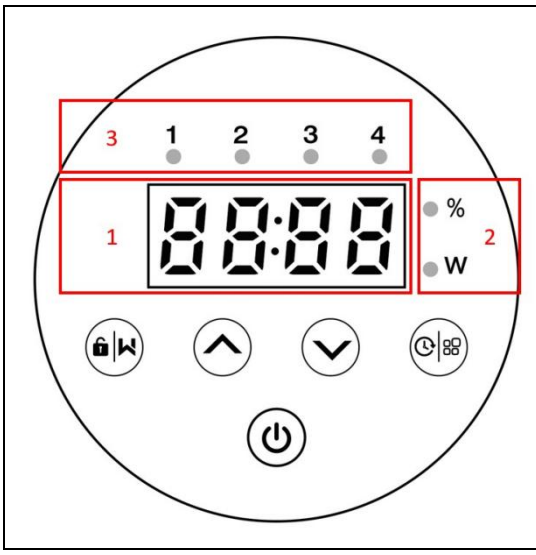


| |
|---|
| ① Running capacity / power display |
| ② Running capacity / power indicator |
| ③ Timer indicator 1/2/3/4 |
| Backwash / unlock |
| Up / down: to change the value of setting |
| Timer setting / power reading |
| On/off |

### 5.2. Startup process overview

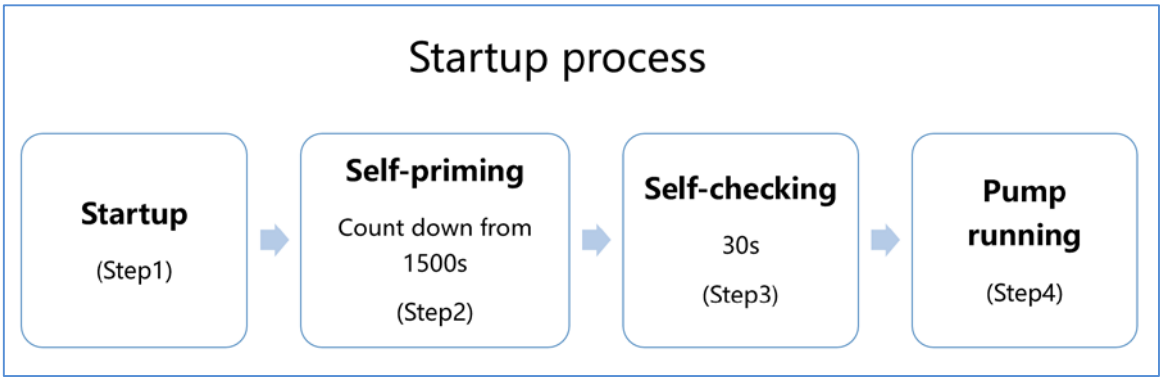


#### ① Step 1: Startup

- Press and hold for more than 3 seconds to unlock the screen.
- Press to startup the pump.

#### ② Step 2: Self-priming

- The pump will start counting down from 1500s; When the system detects the pump is full of water, it will stop counting down and exit priming automatically.
- Users can enter the parameter setting to disable the default self-priming function (see 5.8).

#### ③ Step 3: Self-checking

- The pump will recheck for 30s again to make sure the self-priming（Step2）is completed.

#### ④ Step 4: Pump running

- The pump will run at 80% of the running capacity at the initial startup after the self-priming.

### 5.3. Startup

When the power is switched on, the screen will fully light up for 3 seconds, the device code will be displayed, and then it will enter the normal working state. When the screen is locked, only the button will light up; Press and hold for more than 3 seconds to unlock the screen. The screen will automatically lock up when there is no operation for more than 1 minute and the brightness of the screen will be reduced to 1/3 of the normal display. Short press to wake up the screen and observe the relevant operating parameters.

### 5.4. Self-priming

Each time the pump is started, it will start self-priming.

When the pump performs self-priming, it will count down start from 1500s and stop count down automatically when the system detects the pump is full of water, then the system will recheck for 30s again to make sure the self-priming is completed.

Users can cancel self-priming manually by pressing for more than 3 seconds. The pump will run at the default 80% speed at the initial startup.

**Remark:**

1) The pump is delivered with self-priming enabled. Each time the pump restarts, it will perform self-priming automatically. Users can enter the parameter setting to disable the default self-priming function (see 5.8).

2) If the default self-priming function is disabled, and the pump has not been used for a long time, the water level in the strainer basket may drop. Users can manually activate the self-priming function by pressing both for 3 seconds, the adjustable period is from 600s to 1500s (default value is 600s).

3) After the manual self-priming is completed, the pump will return to the previous state before activating the manual self-priming.

4) Users can press for more than 3 seconds to cancel the manual self-priming.

### 5.5. Backwash

Users can start the backwash or fast re-circulation in any running state by pressing .

| | Default | Setting range |
|---|---|---|
| Running Time | 180s | Press or to adjust from 0 to 1500s with 30 seconds for each step |
| Running capacity | 100% | 80-100%, enter the parameter setting (see 5.8) |

**Exit backwash:**

When backwash mode is on, users can hold for 3 seconds to cancel it, the pump will return to the previous state before backwash.

### 5.6. Running Capacity Setting

| | | |
|---|---|---|
| 1 | | Hold for more than 3 seconds to unlock the screen. |
| 2 | | Press to start. The pump will run at 80% of the running capacity at the initial startup after the self-priming. |
| 3 | | Press or to set the running capacity between 30%-100%, each step by 5%. |
| 4 | | Hold for more than 3 seconds to read the real-time power.<br>It will return to the running capacity display after 10s without operation. |

**Note:** When the running capacity is adjusted, the system will save the latest parameter automatically.

### 5.7. Timer mode

The pump's on/off and running capacity could be commanded by a timer, which could be programmed daily as needed. Maximum 4 timers can be set on the control panel.

| | |
|---|---|
| 1 | Enter timer setting by pressing . |
| 2 | Press or to set the local time. Press to confirm and move to timer-1 setting. |
| 3 | When enter the timer-1 setting, the timer indicator 1 will light up. "StA"will be shown on the screen. Press to proceed and then press or to set the start time of timer-1 (with 30 minutes for each step), press to confirm. |

| | |
|---|---|
| 4 | When the start time of timer 1 is confirmed, “End”will be shown on the screen. Press to proceed and then press or to set the end time of timer-1 (with 30 minutes for each step), press to confirm. |
| 5 | When the end time of timer 1 is confirmed, “SPd”will be shown on the screen. Press to proceed and then press or to set the running capacity of timer-1 (30% - 100%, each step by 5%), press to confirm. |
| 6 | When the timer 1 setting is completed, repeat steps 3 – 5 to complete the setting of timer 2 – 4. |

**Note:**

1) When timer mode is activated, if the set time period contains the current time, the pump will start running according to the set running capacity and the corresponding timer indicator (1 or 2 or 3 or 4) will stay on, and the set running capacity will be shown on the screen.

2) When timer mode is activated, if the set time period does not contain the current time, the timer indicator (1 or 2 or 3 or 4) that is about to start running will light up and flash, and the current time will be displayed on the screen.

3) During the timer setting, if users want to return to the previous setting item, hold both for 3 seconds.

4) If users don’t need 4 timers, hold for 3 seconds after completing the setting of the specific timer, the system will automatically save the current set value and activate the timer mode.

5) When the timer mode is on, users can check the setting of each timer. Press to select the specific timer (1 or 2 or 3 or 4), and the corresponding timer indicator will light up. Then press to check the start time, end time, and running capacity setting of the selected timer.

6) Users can hold for 3 seconds to read the real-time power and it will return to the timer display after 10s without operation.

7) The timer settings of the pump have been limited, users will not set the overlapping timers.

8) After the timer is set and then users turn off the pump, when users turn on the pump again, it will continue to return to the timer mode.

9) Users can cancel the timer mode by holding for 3 seconds.

### 5.8. Parameter Setting

| | |
|---|---|
| Restore factory setting | Switch off the pump, then hold both for 3 seconds. |
| Check the software version | Switch off the pump, then hold both for 3 seconds. |
| Enter the parameter setting | Switch off the pump, then hold both for 3 seconds to enter the parameter setting. The parameter address (on the left) and default setting value (on the right) will flash alternately on the screen. Users can press or to adjust the current value, and hold both for 3 seconds to the next parameter address. It will exit the parameter setting after 10 seconds without operation. |

| Parameter Address | Description | Default Setting | Setting Range |
|---|---|---|---|
| 1 | Di2 (Digital input 2) | 100% | 30-100%, by 5% increments |
| 2 | Di3 (Digital input 3) | 80% | 30-100%, by 5% increments |
| 3 | Di4 (Digital input 4) | 40% | 30-100%, by 5% increments |
| 4 | Backwash capacity | 100% | 80-100%, by 5% increments |
| 5 | Enable or disable the self-priming at each start | 25 | 25: enables<br>0: disables |

### For example: How to Enable / Disable Self-Priming Function?

1) **Enter parameter setting:** Switch off the pump, then hold both for 3 seconds;

2) **Select parameter address:** Hold both for 3 seconds to the next parameter address, change to address 5 in this way;

3) **Enable or disable the self-priming function:** Adjust by pressing or , 25= Enables, 0=Disables.

## 6. EXTERNAL CONTROL

External control can be enabled via following contacts. If more than one external control is enabled, the priority is as below: Digital Input > RS485 > Panel control.

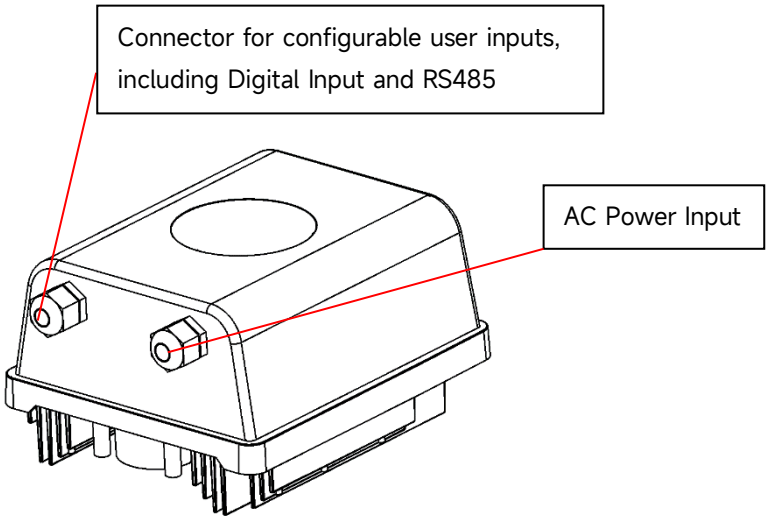


Figure 4 - Connector port location

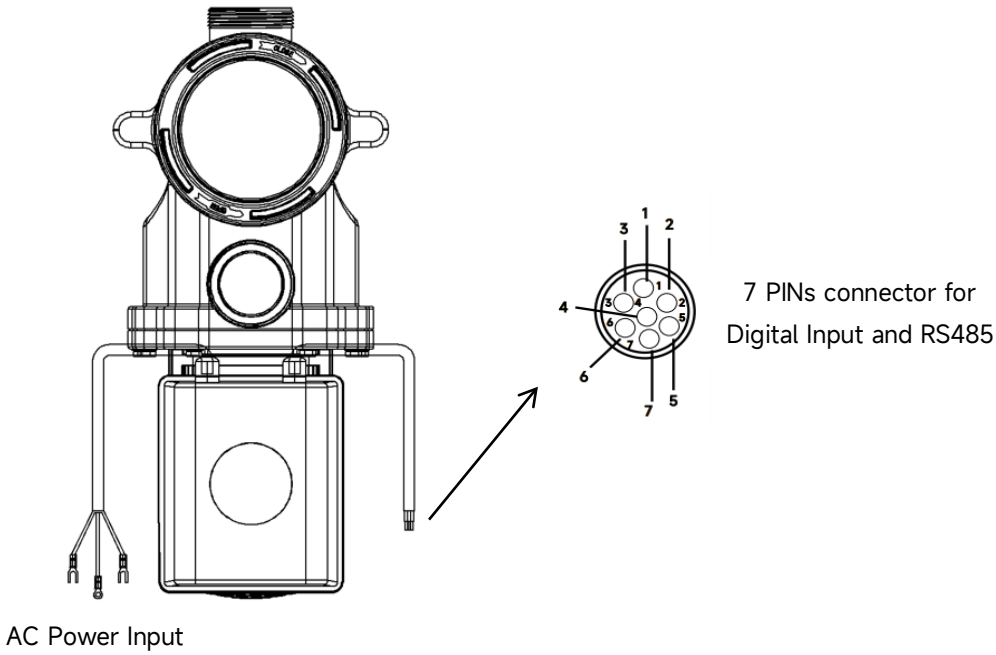


Figure 5 - Digital Input and RS485 connector

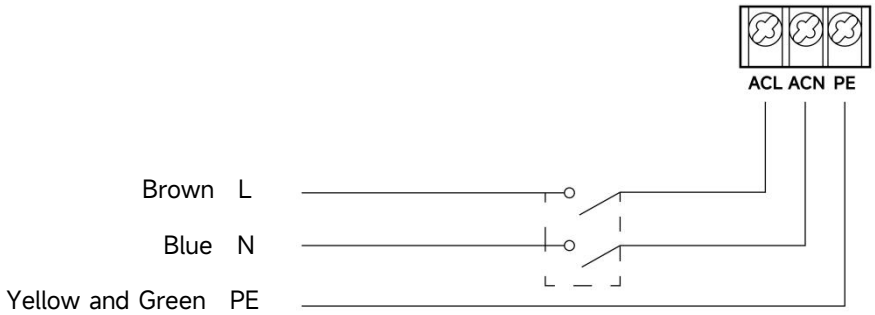


Figure 6 - Power cord connection

| External Control | Color | Description | Note |
|---|---|---|---|
| Digital Input | Red | Di4（Digital Input 4） | Default speed=40% |
| | Black | Di3（Digital Input 3） | Default speed=80% |
| | White | Di2（Digital Input 2） | Default speed=100% |
| | Grey | Di1（Digital Input 1） | Stop |
| | Yellow | Digital Ground（COM） | COM |
| RS485 | Green | RS485-A | / |
| | Brown | RS485-B | / |

### a. Digital Input:

Running capacity is determined by the state of digital input,

1) When Di1(Grey) connects with COM(Yellow), the pump will be mandatory to stop; if disconnected, the digital control will be invalid;

2) When Di2(White) connects with COM(Yellow), the pump will be mandatory to run at 100%; if disconnected, the control priority will be back on panel control;

3) When Di3(Black) connects with COM(Yellow), the pump will be mandatory to run at 80%; if disconnected, the control priority will be back on panel control;

4) When Di4(Red) connects with COM(Yellow), the pump will be mandatory to run at 40%; if disconnected, the control priority will be back on panel control;

5) The capacity of inputs (Di2/Di3/Di4) could be modified according to the parameter setting.

### b. RS485:

To connect with RS485-A(Green) and RS485-B(Brown), the pump could be controlled via Modbus 485 communication protocol.

# 7. PROTECTION AND FAILURE

## 7.1. High-Temperature Warning and Speed Reduction - AL01

During normal operation (except backwash/self-priming), when the module temperature reaches the high-temperature warning trigger threshold (81°C), it enters the high-temperature warning state; when the temperature drops to the high-temperature warning release threshold (78°C), the high-temperature warning state is released. The display area alternately displays AL01 and running speed.

If AL01 is displayed, the running capacity will be automatically reduced as below:

1) If current operating capacity is higher than 85%, the running capacity will be automatically reduced by 15%;
2) If current operating capacity is between 70% and 85%, the running capacity will be automatically reduced by 10%;
3) If current operating capacity is lower than 70%, the running capacity will be automatically reduced by 5%.

## 7.2. Under voltage protection - AL02

When the device detects that the input voltage is less than 198V, the device will limit the current running speed. The display area alternately displays AL02 and running speed.

1) When the input voltage is less than or equal to 180V, the running capacity will be limited to 70%;
2) When the input voltage range is within 180V - 190V, the running capacity will be limited to 75%;
3) When the input voltage range is within 190V - 198V, the running capacity will be limited to 85%.

## 7.3. Troubleshooting

| Problem | Possible causes and solution |
|---|---|
| **Pump does not start** | • Power Supply fault, disconnected or defective wiring.<br>• Fuses blown or thermal overload open.<br>• Check the rotation of the motor shaft for free movement and lack of obstruction.<br>• Because of a long time lying idle. Unplug the power supply and manually rotate motor's rear shaft a few times with a screwdriver. |
| **Pump does not prime** | • Empty pump/strainer housing. Make sure the pump/strainer housing is filled with water and the O ring of cover is clean.<br>• Loose connections on the suction side.<br>• Strainer basket or skimmer basket loaded with debris.<br>• Suction side clogged.<br>• Distance between pump inlet and liquid level is higher than 2m, the installation height of pump should be lowered. |

| | |
|---|---|
| **Low Water Flow** | • Pump does not prime.<br>• Air entering suction piping.<br>• Basket full of debris.<br>• Inadequate water level in pool. |
| **Pump being noisy** | • Air leak in suction piping, cavitation caused by restricted or undersized suction line or leak at any joint, low water level in pool, and unrestricted discharge return lines.<br>• Vibration caused by improper installation, etc.<br>• Damaged motor bearing or impeller (need to contact the supplier for repair). |

### 7.4. Error code

When the device detects a failure, it will stop automatically and display the error code. After stopping for 15 seconds, check if the failure is cleared. If cleared, the pump will resume working.

| Item | Error Code | Details | |
|---|---|---|---|
| 1 | E001 | Description | **Abnormal input voltage:** the power supply voltage is out of the range of 165V to 275V. |
| | | Process | The pump will stop automatically for 15 sec and resume working if it detects the power supply voltage is within the range. |
| 2 | E002 | Description | **Output over current:** The peak current of the pump is higher than the protection current. |
| | | Process | The pump will stop automatically for 15 sec and then resume working, if this occurs for three times continuously, the pump will shut down and need to be checked and restarted manually. |
| 3 | E101 | Description | **Heat sink overheat:** The heat sink temperature reaches 91°C for 10sec. |
| | | Process | The pump will stop automatically for 30 sec and resume working if it detects the heat sink temperature is less than 81°C. |
| 4 | E102 | Description | **Heat sink sensor error:** The heat sink sensor detects an open or short circuit. |
| | | Process | The pump will stop automatically for 15 sec and resume working if it detects the heat sink sensor is not open or short circuit. |
| 5 | E103 | Description | **Master driver board error:** The Master driver board is faulty. |
| | | Process | The pump will stop automatically for 15 sec and then resume working, if this occurs for three times continuously, the pump will shut down and need to be checked and restarted manually. |

| | | | |
|---|---|---|---|
| **6** | **E104** | Description | **Phase-deficient protection:** Motor cables are not plugged into the master drive board. |
| | | Process | The pump will stop automatically for 15 sec and then resume working, if this occurs for three times continuously, the pump will shut down and need to be checked and restarted manually. |
| **7** | **E105** | Description | **AC current sampling circuit failure:** When the pump power off, the bias voltage of the sampling circuit is out of the range of 2.4V~2.6V. |
| | | Process | The pump needs to be powered off and restarted manually. |
| **8** | **E106** | Description | **DC abnormal voltage:** The DC voltage is out of the range of 210V to 420V. |
| | | Process | The pump will stop automatically for 15 sec and then resume working, if this occurs for three times continuously, the pump will shut down and need to be checked and restarted manually. |
| **9** | **E107** | Description | **PFC protection:** PFC protection occurs on the Master driver board. |
| | | Process | The pump will stop automatically for 15 sec and then resume working, if this occurs for three times continuously, the pump will shut down and need to be checked and restarted manually. |
| **10** | **E108** | Description | **Motor power overload:** Motor power exceeds the rated power by 1.2 times |
| | | Process | The pump will stop automatically for 15 sec and then resume working, if this occurs for three times continuously, the pump will shut down and need to be checked and restarted manually. |
| **11** | **E201** | Description | **Circuit board error:** When the pump power off, the bias voltage of the sampling circuit is out of the range of 2.4V~2.6V. |
| | | Process | The pump needs to be powered off and restarted manually. |
| **12** | **E203** | Description | **RTC time reading error:** Reading and writing the information of timer clock is incorrect. |
| | | Process | The pump needs to be powered off and restarted manually. |
| **13** | **E204** | Description | **Display Board EEPROM reading failure:** Reading and writing the information of display board EEPROM is incorrect. |
| | | Process | The pump needs to be powered off and restarted manually. |
| **14** | **E205** | Description | **Communication Error:** The communication between display board and master driver board is failure lasts 15 sec. |
| | | Process | The pump will stop automatically for 15 sec and resume working if it detects the communication between display board and master driver |

| | | | |
|---|---|---|---|
| | | | board lasts 1 sec. |
| **15** | **E207** | Description | **No water protection:** The pump is lack of water. |
| | | Process | Stop the pump manually, fill up the pump with water and restart it. If this occurs for twice continuously, the pump will shut down and need to be checked manually. |
| **16** | **E209** | Description | **Loss of prime:** The pump cannot self-priming due to the reasons such as exceeding the suction range or the pipeline is too complicated. |
| | | Process | Check the pump or pipeline that there is no leakage, and then fill up the pump with water and restart it. |

## 8. MAINTENANCE

Empty the strainer basket frequently. The basket should be inspected through the transparent lid and emptied when there is an evident stack of rubbish inside. The following instructions should be followed:

1). Disconnected the power supply.
2). Unscrew the strainer basket lid anti-clockwise and remove.
3). Lift up the strainer basket.
4). Empty the trapped refuse from the basket and rinse out the debris if necessary.
**Note: Do not knock the plastic basket on a hard surface as it will cause damage.**

5). Inspect the basket for signs of damage, and replace it.
6). Check the lid O-ring for stretching, tears, cracks or any other damage
7). Replace the lid, hand tightening is sufficient.
**Note: Periodically inspecting and cleaning the strainer basket will help prolong its life.**

## 9. WARRANTY & EXCLUSIONS

Should a defect become evident during the term of the warranty, at its option, the manufacturer will repair or replace such item or part at its own cost and expense. Customers need to follow the warranty claim procedure in order to obtain the benefit of this warranty.

The guarantee will be void in cases of improper installation, improper operation, inappropriate use, tampering or using of non-original spare parts.

## 10. DISPOSAL

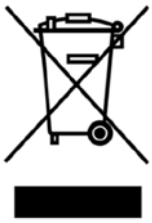

When disposing of the product, please sort the waste products as electrical or electronic product waste or hand it over to the local waste collection system.

The separate collection and recycling of waste equipment at the time of disposal will help ensure that it is recycled in a manner that protects human health and the environment. Contact your local authority for information on where you can drop off your water pump for recycling.

## 11. Warning Statement

Warning: Changes or modifications to this unit not expressly approved by the party responsible for compliance could void the user’ s authority to operate the equipment.

This device complies with Part 15 of the FCC Rules. Operation is subject to the following two conditions: (1) this device may not cause harmful interference, and (2) this device must accept any interference received, including interference that may cause undesired operation.

Note: This equipment has been tested and found to comply with the limits for a Class B digital device, pursuant to part 15 of the FCC Rules. These limits are designed to provide reasonable protection against harmful interference in a residential installation. This equipment generates, uses and can radiate radio frequency energy and, if not installed and used in accordance with the instructions, may cause harmful interference to radio communications. However, there is no guarantee that interference will not occur in a particular installation. If this equipment does cause harmful interference to radio or television reception, which can be determined by turning the equipment off and on, the user is encouraged to try to correct the interference by one or more of the following measures:

-- Reorient or relocate the receiving antenna.

-- Increase the separation between the equipment and receiver.

-- Connect the equipment into an outlet on a circuit different from that to which the receiver is connected.

-- Consult the dealer or an experienced radio/TV technician for help.

To maintain compliance with FCC's RF exposure guidelines, the distance must be at least 20cm between the radiator and your body, and fully supported by the operating and installation configurations of the transmitter and its antenna(s).

MFD BY Aquagem Manufacturing Limited

NO.15, 101, 16, 401, 501, NO.193, Jinlong Road, Dalong Street, Panyu District, Guangzhou

www.aquagem.com

IMPORTED BY PPG Belgium NV

Textielstraat 13, 8790 Waregem, Belgium

www.polletpoolgroup.com

AG024-DE-04