TEST REPORT

Product	:	Le Petit Prince Traveling Bluetooth Speaker
Trade mark	:	N/A
Model/Type reference	:	MG24-29
Serial Number	:	N/A
Report Number	:	EED32S80229502
FCC ID	:	2BRS2-MG24-29
Date of Issue	:	Feb. 27, 2026
Test Standards	:	47 CFR Part 15 Subpart C
Test result	:	PASS

Prepared for:

Shenzhen Mark Workshop Technology Co., Ltd.
2nd and 3rd floor, Building Q, 2nd and 3rd floor, Building M,Shasi High-tech Park, Shasi Community, Shajing Street, Bao'an District, shenzhen, Guangdong. China

Prepared by:

Centre Testing International Group Co., Ltd.
Hongwei Industrial Park, Zone 70, Bao'an District, Shenzhen, Guangdong, China
TEL: +86-755-3368 3668
FAX: +86-755-3368 3385

Compiled by:	Win Wei	Reviewed by:	Keven Tan
Approved by:	Aaron Ma	Date:	Feb. 27, 2026

Check No.::5344270126

1 Contents

Page

1 CONTENTS 2
2 TEST SUMMARY 3
3 GENERAL INFORMATION 4
3.1 CLIENT INFORMATION 4
3.2 GENERAL DESCRIPTION OF EUT 4
3.3 TEST CONFIGURATION 6
3.4 TEST ENVIRONMENT 7
3.5 DESCRIPTION OF SUPPORT UNITS 7
3.6 TEST LOCATION 7
3.7 MEASUREMENT UNCERTAINTY (95% CONFIDENCE LEVELS, K=2) 8
3.8 EQUIPMENT LIST 9
4 TEST RESULTS AND MEASUREMENT DATA 13
4.1 ANTENNA REQUIREMENT 13
4.2 AC POWER LINE CONDUCTED EMISSIONS 14
4.3 MAXIMUM CONDUCTED OUTPUT POWER 18
4.4 20DB EMISSION BANDWIDTH 19
4.5 CARRIER FREQUENCY SEPARATION 20
4.6 NUMBER OF HOPPING CHANNEL 21
4.7 TIME OF OCCUPANCY 22
4.8 BAND EDGE MEASUREMENTS 23
4.9 CONDUCTED SPURIOUS EMISSIONS 24
4.10 PSEUDORANDOM FREQUENCY HOPPING SEQUENCE 25
4.11 RADIATED SPURIOUS EMISSION & RESTRICTED BANDS 27
5 APPENDIX A 56
6 PHOTOGRAPHS 57

2 Test Summary

Test Item	Test Requirement	Result
Antenna Requirement	47 CFR Part 15, Subpart C Section 15.203/15.247 (c)	PASS
AC Power Line Conducted Emission	47 CFR Part 15, Subpart C Section 15.207	PASS
Maximum Conducted Output Power	47 CFR Part 15, Subpart C Section 15.247 (b)(1)	PASS
20dB Emission Bandwidth	47 CFR Part 15, Subpart C Section 15.247 (a)(1)	PASS
Carrier Frequency Separation	47 CFR Part 15, Subpart C Section 15.247 (a)(1)	PASS
Number of Hopping Channels	47 CFR Part 15, Subpart C Section 15.247 (a)(1)	PASS
Time of Occupancy	47 CFR Part 15, Subpart C Section 15.247 (a)(1)	PASS
Pseudorandom Frequency Hopping Sequence	47 CFR Part 15, Subpart C Section 15.247(b)(4)	PASS
Band Edge Measurements	47 CFR Part 15, Subpart C Section 15.247(d)	PASS
Conducted Spurious Emissions	47 CFR Part 15, Subpart C Section 15.247(d)	PASS
Radiated Spurious emissions	47 CFR Part 15, Subpart C Section 15.205/15.209	PASS
Restricted bands around fundamental frequency	47 CFR Part 15, Subpart C Section 15.205/15.209	PASS

3 General Information

3.1 Client Information

Applicant:	Shenzhen Mark Workshop Technology Co., Ltd.
Address of Applicant:	2nd and 3rd floor, Building Q, 2nd and 3rd floor, Building M,Shasi High-tech Park, Shasi Community, Shajing Street, Bao'an District, shenzhen, Guangdong. China
Manufacturer:	Shenzhen Mark Workshop Technology Co., Ltd.
Address of Manufacturer:	2nd and 3rd floor, Building Q, 2nd and 3rd floor, Building M,Shasi High-tech Park, Shasi Community, Shajing Street, Bao'an District, shenzhen, Guangdong. China
Factory:	Shenzhen Mark Workshop Technology Co., Ltd.
Address of Factory:	2nd and 3rd floor, Building Q, 2nd and 3rd floor, Building M,Shasi High-tech Park, Shasi Community, Shajing Street, Bao'an District, shenzhen, Guangdong. China

3.2 General Description of EUT

Product Name:	Le Petit Prince Traveling Bluetooth Speaker	
Model No.:	MG24-29	
Test Model No.:	MG24-29	
Trade Mark:	N/A	
Product Type:	☐ Mobile ☒ Portable ☐ Fix Location	
Operation Frequency:	2402MHz-2480MHz	
Modulation Technique:	Frequency Hopping Spread Spectrum(FHSS)	
Modulation Type:	GFSK, π/4DQPSK, 8DPSK	
Number of Channel:	79	
Hopping Channel Type:	Adaptive Frequency Hopping systems	
Antenna Type:	PCB Antenna	
Antenna Gain:	-0.59dBi	
Power Supply:	Battery:	DC 3.7V
Test Voltage:	DC 3.7V	
Sample Received Date:	Jan. 27, 2026	
Sample tested Date:	Jan. 27, 2026 to Feb. 09, 2026	

Operation Frequency each of channel							
Channel	Frequency (MHz)	Channel	Frequency (MHz)	Channel	Frequency (MHz)	Channel	Frequency (MHz)
0	2402	20	2422	40	2442	60	2462
1	2403	21	2423	41	2443	61	2463
2	2404	22	2424	42	2444	62	2464
3	2405	23	2425	43	2445	63	2465
4	2406	24	2426	44	2446	64	2466
5	2407	25	2427	45	2447	65	2467
6	2408	26	2428	46	2448	66	2468
7	2409	27	2429	47	2449	67	2469
8	2410	28	2430	48	2450	68	2470
9	2411	29	2431	49	2451	69	2471
10	2412	30	2432	50	2452	70	2472
11	2413	31	2433	51	2453	71	2473
12	2414	32	2434	52	2454	72	2474
13	2415	33	2435	53	2455	73	2475
14	2416	34	2436	54	2456	74	2476
15	2417	35	2437	55	2457	75	2477
16	2418	36	2438	56	2458	76	2478
17	2419	37	2439	57	2459	77	2479
18	2420	38	2440	58	2460	78	2480
19	2421	39	2441	59	2461		

Note:
In section 15.31(m), regards to the operating frequency range over 10 MHz, the Lowest frequency, the middle frequency, and the highest frequency of channel were selected to perform the test, and the selected channel see below:

Channel	Frequency(MHz)
The lowest channel (CH0)	2402
The middle channel (CH39)	2441
The highest channel (CH78)	2480

3.3 Test Configuration

EUT Test Software Settings:		
Test Software:	FCC_assist_1.0.2.2.exe	
EUT Power Grade:	10	
Use test software to set the lowest frequency, the middle frequency and the highest frequency keep transmitting of the EUT.		
Mode	Channel	Frequency(MHz)
DH1/DH3/DH5	CH0	2402
	CH39	2441
	CH78	2480
2DH1/2DH3/2DH5	CH0	2402
	CH39	2441
	CH78	2480
3DH1/3DH3/3DH5	CH0	2402
	CH39	2441
	CH78	2480

3.4 Test Environment

Operating Environment:	
Radiated Spurious Emissions:	
Temperature:	22~25.0 °C
Humidity:	50~55 % RH
Atmospheric Pressure:	1010mbar
Conducted Emissions:	
Temperature:	22~25.0 °C
Humidity:	50~55 % RH
Atmospheric Pressure:	1010mbar
RF Conducted:	
Temperature:	22~25.0 °C
Humidity:	50~55 % RH
Atmospheric Pressure:	1010mbar

3.5 Description of Support Units

The EUT has been tested independently.

3.6 Test Location

All tests were performed at:

Centre Testing International Group Co., Ltd
Hongwei Industrial Park, Zone 70, Bao'an District, Shenzhen, Guangdong, China
Telephone: +86 (0) 755 33683668 Fax:+86 (0) 755 33683385
No tests were sub-contracted.
FCC Designation No.: CN1164, Test Firm Registration No.: 260439

3.7 Measurement Uncertainty (95% confidence levels, k=2)

No.	Item	Measurement Uncertainty
1	Radio Frequency	7.9×10^{-8}
2	RF power, conducted	0.46dB (30MHz-1GHz)
		0.55dB (1GHz-40GHz)
3	Radiated Spurious emission test	3.3dB (9kHz-30MHz)
		4.3dB (30MHz-1GHz)
		4.5dB (1GHz-18GHz)
		3.4dB (18GHz-40GHz)
4	Conduction emission	3.5dB (9kHz-150kHz)
		3.1dB (150kHz-30MHz)
5	Temperature test	0.64°C
6	Humidity test	3.8%
7	DC power voltages	0.026%

3.8 Equipment List

RF test system					
Equipment	**Manufacturer**	**Model No.**	**Serial Number**	**Cal. Date (mm-dd-yyyy)**	**Cal. Due date (mm-dd-yyyy)**
Spectrum Analyzer	Keysight	N9010A	MY54510339	11-25-2025	11-24-2026
Spectrum Analyzer	R&S	FSVS3044	101509	02-14-2025	02-13-2026
Spectrum Analyzer	R&S	FSW43	102978	08-11-2025	08-10-2026
Signal Generator	Keysight	N5182B	MY53051549	11-13-2025	11-12-2026
Signal Generator	Agilent	N5181A	MY46240094	11-25-2025	11-24-2026
DC Power	Keysight	E3642A	MY56376072	11-13-2025	11-12-2026
Communication test set	R&S	CMW500	169004	03-03-2025	03-02-2026
RF control unit(power unit)	JS Tonscend	JS0806-2	24I80620925	07-21-2025	07-20-2026
Wi-Fi 7GHz Band Extendder	JS Tonscend	TS-WF7U2	2206200002	05-12-2025	05-11-2026
high-low temperature test chamber	Dong Guang Qin Zhuo	LK-80GA	QZ20150611879	11-13-2025	11-12-2026
Temperature/ Humidity Indicator	biaozhi	HM10	1804186	05-26-2025	05-25-2026
BT&WI-FI Automatic test software	JS Tonscend	JS1120-3	V3.6.21	---	---
Digital multimeter	FLUKE	17B MAX	59545050WS	10-15-2025	10-14-2026

Conducted disturbance Test					
Equipment	Manufacturer	Model No.	Serial Number	Cal. date (mm-dd-yyyy)	Cal. Due date (mm-dd-yyyy)
Receiver	R&S	ESCI	100435	04-08-2025	04-07-2026
Temperature/ Humidity Indicator	Defu	TH128	/	03-31-2025	03-30-2026
LISN	R&S	ENV216	100098	09-13-2025	09-12-2026
Barometer	changchun	DYM3	1188	---	---
Test software	Fara	EZ-EMC	EMC-CON 3A1.1	---	---
Capacitive voltage probe	Schwarzbeck	CVP 9222C	00124	06-07-2025	06-06-2026
ISN	TESEQ	ISN T800	30297	11-24-2025	11-23-2026

3M Semi-anechoic Chamber (2)- Radiated disturbance Test					
Equipment	Manufacturer	Model No.	Serial Number	Cal. date (mm-dd-yyyy)	Cal. Due date (mm-dd-yyyy)
3M Chamber & Accessory Equipment	TDK	SAC-3	---	01/13/2024	01/12/2027
Receiver	R&S	ESCI7	100938-003	09/03/2025	09/02/2026
TRILOG Broadband Antenna	schwarzbeck	VULB 9163	9163-618	05/14/2025	05/13/2026
Loop Antenna	Schwarzbeck	FMZB 1519B	1519B-076	04/07/2025	04/06/2026
Microwave Preamplifier	Tonscend	EMC051845SE	980380	11/25/2025	11/24/2026
Horn Antenna	A.H.SYSTEMS	SAS-574	374	07/02/2023	07/01/2026
Horn Antenna	ETS-LINGREN	BBHA 9120D	9120D-1869	04/07/2025	04/06/2026
Preamplifier	Agilent	11909A	12-1	03/03/2025	03/02/2026
Preamplifier	CD	PAP-1840-60	6041.6042	05/26/2025	05/25/2026
Test software	Fara	EZ-EMC	EMEC-3A1-Pre	---	---
Cable line	Fulai(7M)	SF106	5219/6A	01/13/2024	01/12/2027
Cable line	Fulai(6M)	SF106	5220/6A	01/13/2024	01/12/2027
Cable line	Fulai(3M)	SF106	5216/6A	01/13/2024	01/12/2027
Cable line	Fulai(3M)	SF106	5217/6A	01/13/2024	01/12/2027

3M full-anechoic Chamber					
Equipment	**Manufacturer**	**Model No.**	**Serial Number**	**Cal. Date (mm-dd-yyyy)**	**Cal. Due date (mm-dd-yyyy)**
Fully Anechoic Chamber	TDK	FAC-3	---	01-29-2024	01-28-2027
Receiver	Keysight	N9038A	MY57290136	12-22-2025	12-21-2026
Spectrum Analyzer	Keysight	N9020B	MY57111112	12-21-2025	12-20-2026
Spectrum Analyzer	Keysight	N9030B	MY57140871	12-21-2025	12-20-2026
TRILOG Broadband Antenna	Schwarzbeck	VULB 9163	9163-1148	04-12-2025	04-11-2026
Horn Antenna	Schwarzbeck	BBHA 9170	9170-832	04-12-2025	04-11-2026
Horn Antenna	ETS-LINDGREN	3117	57407	06-29-2025	06-28-2026
Preamplifier	EMCI	EMC001330	980563	03-03-2025	03-02-2026
Preamplifier	EMCI	EMC051845SE	980380	11-25-2025	11-24-2026
Preamplifier	Tonscend	TAP-011858	AP21B806112	07-07-2025	07-06-2026
Communication test set	R&S	CMW500	104466	11-25-2025	11-24-2026
Temperature/ Humidity Indicator	biaozhi	GM1360	EE1186631	03-31-2025	03-30-2026
RSE Automatic test software	JS Tonscend	JS36-RSE	V5.0.0.1	---	---
Cable line	Times	SFT205-NMSM-2.50M	394812-0001	01-29-2024	01-28-2027
Cable line	Times	SFT205-NMSM-2.50M	394812-0002	01-29-2024	01-28-2027
Cable line	Times	SFT205-NMSM-2.50M	394812-0003	01-29-2024	01-28-2027
Cable line	Times	SFT205-NMSM-2.50M	393495-0001	01-29-2024	01-28-2027
Cable line	Times	EMC104-NMNM-1000	SN160710	01-29-2024	01-28-2027
Cable line	Times	SFT205-NMSM-3.00M	394813-0001	01-29-2024	01-28-2027
Cable line	Times	SFT205-NMNM-1.50M	381964-0001	01-29-2024	01-28-2027
Cable line	Times	SFT205-NMSM-7.00M	394815-0001	01-29-2024	01-28-2027
Cable line	Times	HF160-KMKM-3.00M	393493-0001	01-29-2024	01-28-2027

4 Test results and Measurement Data

4.1 Antenna Requirement

Standard requirement:	47 CFR Part 15C Section 15.203 /247(c)
15.203 requirement: An intentional radiator shall be designed to ensure that no antenna other than that furnished by the responsible party shall be used with the device. The use of a permanently attached antenna or of an antenna that uses a unique coupling to the intentional radiator, the manufacturer may design the unit so that a broken antenna can be replaced by the user, but the use of a standard antenna jack or electrical connector is prohibited. 15.247(b) (4) requirement: The conducted output power limit specified in paragraph (b) of this section is based on the use of antennas with directional gains that do not exceed 6 dBi. Except as shown in paragraph (c) of this section, if transmitting antennas of directional gain greater than 6 dBi are used, the conducted output power from the intentional radiator shall be reduced below the stated values in paragraphs (b)(1), (b)(2), and (b)(3) of this section, as appropriate, by the amount in dB that the directional gain of the antenna exceeds 6 dBi.	
EUT Antenna:	Please see Internal photos
The antenna is PCB antenna. The best case gain of the antenna is -0.59dBi.	

4.2 AC Power Line Conducted Emissions

Test Requirement:	47 CFR Part 15C Section 15.207
Test Method:	ANSI C63.10-2020
Test Frequency Range:	150kHz to 30MHz
Receiver setup:	RBW=9 kHz, VBW=30 kHz, Sweep time=auto
Limit:	

Frequency range (MHz)	Limit (dBuV)	
	Quasi-peak	Average
0.15-0.5	66 to 56*	56 to 46*
0.5-5	56	46
5-30	60	50

* Decreases with the logarithm of the frequency.

Test Setup:

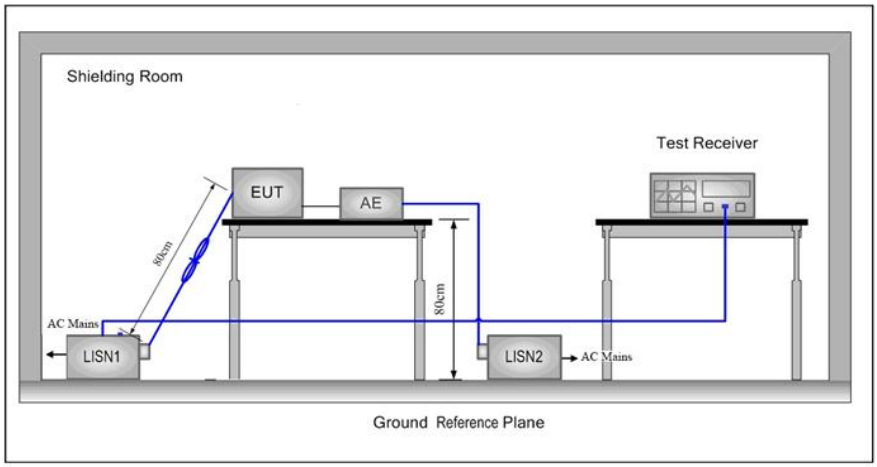

Test Procedure:

1) The mains terminal disturbance voltage test was conducted in a shielded room.
2) The EUT was connected to AC power source through a LISN 1 (Line Impedance Stabilization Network) which provides a 50Ω/50μH + 5Ω linear impedance. The power cables of all other units of the EUT were connected to a second LISN 2, which was bonded to the ground reference plane in the same way as the LISN 1 for the unit being measured. A multiple socket outlet strip was used to connect multiple power cables to a single LISN provided the rating of the LISN was not exceeded.
3) The tabletop EUT was placed upon a non-metallic table 0.8m above the ground reference plane. And for floor-standing arrangement, the EUT was placed on the horizontal ground reference plane,
4) The test was performed with a vertical ground reference plane. The rear of the EUT shall be 0.4 m from the vertical ground reference plane. The vertical ground reference plane was bonded to the horizontal ground reference plane. The LISN 1 was placed 0.8 m from the boundary of the unit under test and bonded to a ground reference plane for LISNs mounted on top of the ground reference plane. This distance was between the closest points of the LISN 1 and the EUT. All other units of the EUT and associated equipment was at least 0.8 m from the LISN 2.

	5) In order to find the maximum emission, the relative positions of equipment and all of the interface cables must be changed according to ANSI C63.10-2020 on conducted measurement.
Exploratory Test Mode:	Non-hopping transmitting mode with all kind of modulation and all kind of data type at the lowest, middle, high channel.
Final Test Mode:	Through Pre-scan, find the DH5 of data type and GFSK modulation at the lowest channel is the worst case. Only the worst case is recorded in the report.
Test Results:	Pass

Measurement Data

Live line:

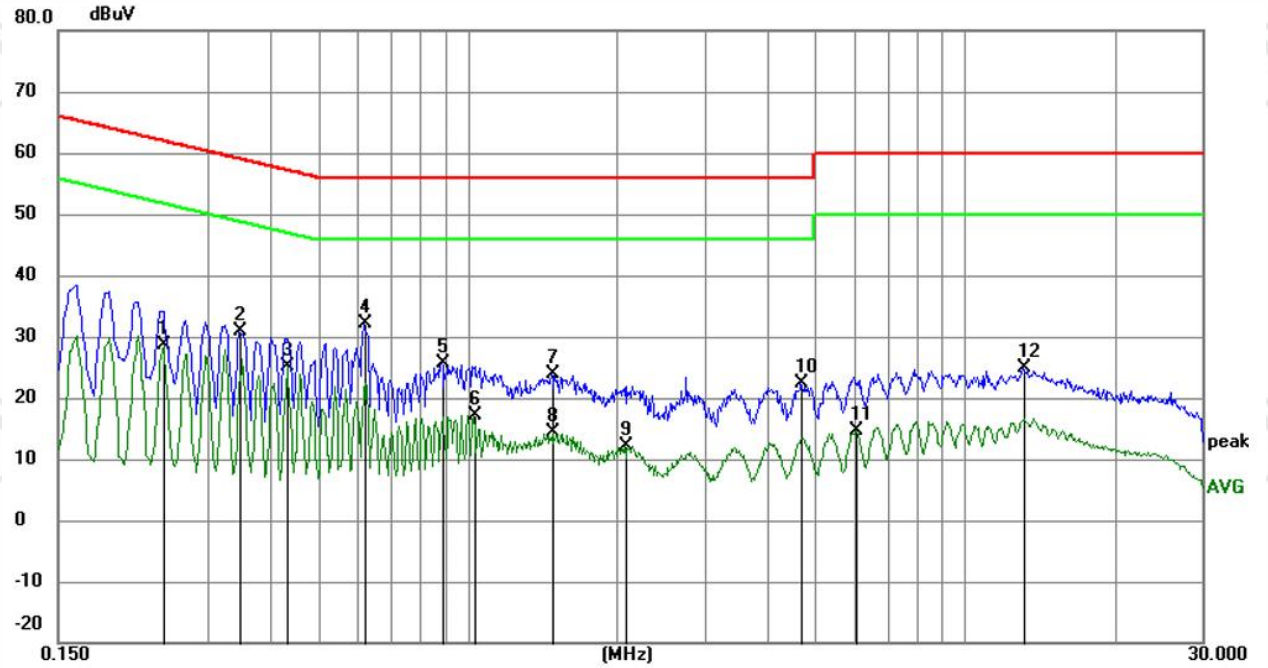

No.	Mk.	Freq.	Reading Level	Correct Factor	Measure-ment	Limit	Margin		
		MHz	dBuV	dB	dBuV	dBuV	dB	Detector	Comment
1		0.2445	18.56	10.17	28.73	51.94	-23.21	AVG	
2		0.3480	20.65	10.11	30.76	59.01	-28.25	QP	
3	*	0.4335	15.07	10.09	25.16	47.19	-22.03	AVG	
4		0.6180	21.98	10.11	32.09	56.00	-23.91	QP	
5		0.8880	15.37	10.17	25.54	56.00	-30.46	QP	
6		1.0275	6.94	10.18	17.12	46.00	-28.88	AVG	
7		1.4775	13.71	10.18	23.89	56.00	-32.11	QP	
8		1.4865	4.09	10.18	14.27	46.00	-31.73	AVG	
9		2.0760	1.95	10.17	12.12	46.00	-33.88	AVG	
10		4.6860	12.38	10.07	22.45	56.00	-33.55	QP	
11		6.0495	4.58	10.04	14.62	50.00	-35.38	AVG	
12		13.0695	14.92	9.89	24.81	60.00	-35.19	QP	

Remark:

1. The following Quasi-Peak and Average measurements were performed on the EUT:
2. Final Test Level =Receiver Reading + LISN Factor + Cable Loss.
3. Margin=Measurement-Limit.
4. Measurement=Reading Level+Correct Factor.
5. In the test results, an asterisk (*) indicates Maximum Data, a cross (X) indicates over Limit.
6. If the Peak value under Average limit, the Average value is not recorded in the report.

Neutral line:

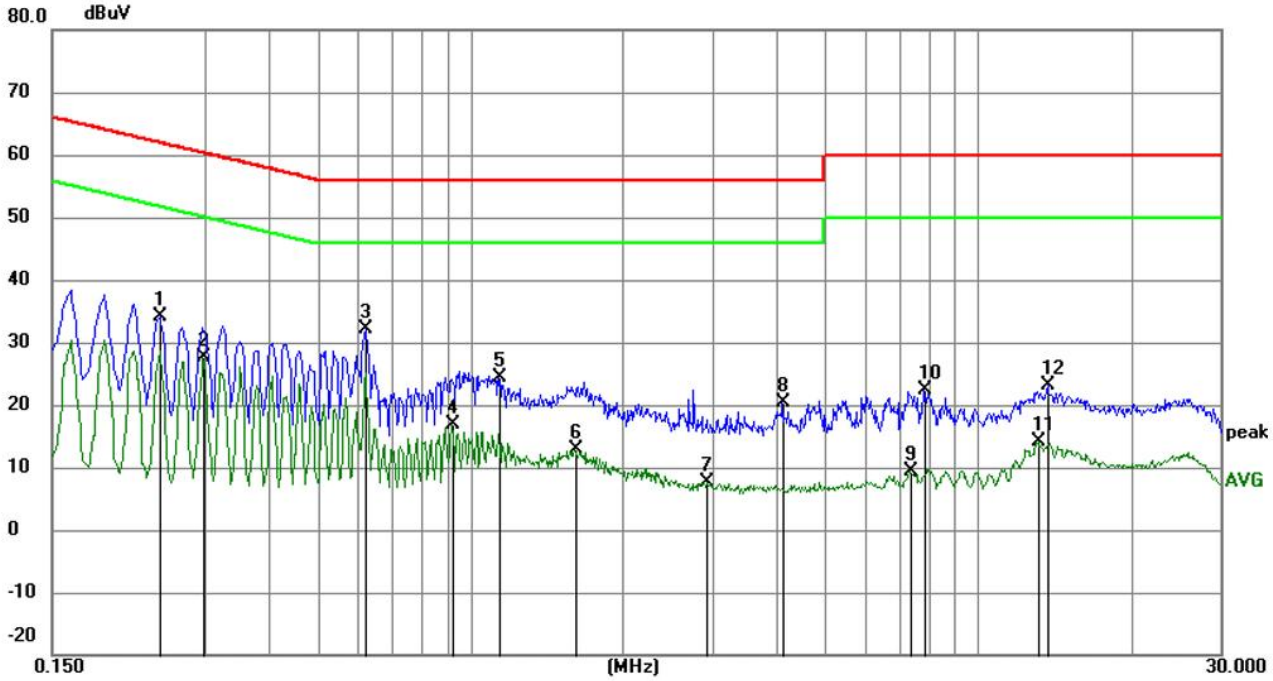

No.	Mk.	Freq.	Reading Level	Correct Factor	Measure-ment	Limit	Margin		
		MHz	dBuV	dB	dBuV	dBuV	dB	Detector	Comment
1		0.2445	24.00	10.17	34.17	61.94	-27.77	QP	
2	*	0.2985	17.47	10.13	27.60	50.28	-22.68	AVG	
3		0.6225	21.90	10.11	32.01	56.00	-23.99	QP	
4		0.9195	6.62	10.17	16.79	46.00	-29.21	AVG	
5		1.1355	14.31	10.18	24.49	56.00	-31.51	QP	
6		1.6080	2.65	10.17	12.82	46.00	-33.18	AVG	
7		2.9265	-2.45	10.14	7.69	46.00	-38.31	AVG	
8		4.1145	10.30	10.09	20.39	56.00	-35.61	QP	
9		7.3590	-0.69	10.02	9.33	50.00	-40.67	AVG	
10		7.8450	12.38	10.01	22.39	60.00	-37.61	QP	
11		13.1775	4.13	9.89	14.02	50.00	-35.98	AVG	
12		13.7310	13.16	9.88	23.04	60.00	-36.96	QP	

Remark:

1. The following Quasi-Peak and Average measurements were performed on the EUT:
2. Final Test Level =Receiver Reading + LISN Factor + Cable Loss.
3. Margin=Measurement-Limit.
4. Measurement=Reading Level+Correct Factor.
5. In the test results, an asterisk (*) indicates Maximum Data, a cross (X) indicates over Limit.
6. If the Peak value under Average limit, the Average value is not recorded in the report.

4.3 Maximum Conducted Output Power

Test Requirement:	47 CFR Part 15C Section 15.247 (b)(1)
Test Method:	ANSI C63.10-2020
Test Setup:	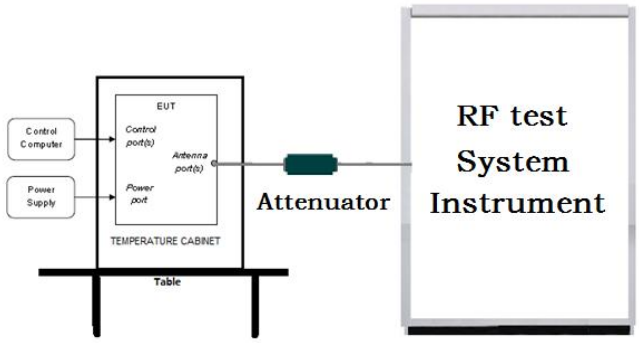 Remark: Offset=Cable loss+ attenuation factor.
Test Procedure:	Use the following spectrum analyzer settings: Span = approximately 5 times the 20 dB bandwidth, centered on a hopping channel RBW > the 20 dB bandwidth of the emission being measured VBW ≥ RBW Sweep = auto Detector function = peak Trace = max hold Allow the trace to stabilize. Use the marker-to-peak function to set the marker to the peak of the emission.
Limit:	21dBm
Exploratory Test Mode:	Non-hopping transmitting with all kind of modulation and all kind of data type
Final Test Mode:	Through Pre-scan, find the DH5 of data type is the worst case of GFSK modulation type, 2-DH5 of data type is the worst case of π/4DQPSK modulation type, 3-DH5 of data type is the worst case of 8DPSK modulation type.
Test Results:	Refer to Appendix A

4.4 20dB Emission Bandwidth

Test Requirement:	47 CFR Part 15C Section 15.247 (a)(1)
Test Method:	ANSI C63.10-2020
Test Setup:	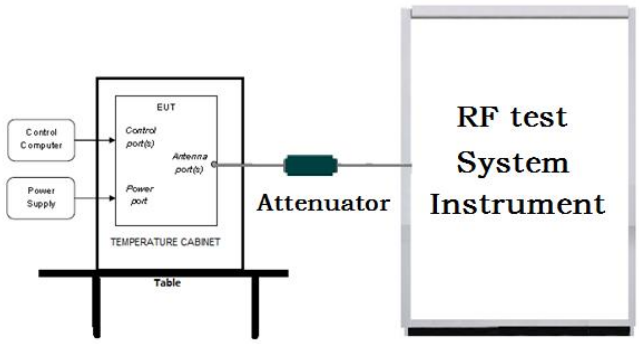 Remark: Offset=Cable loss+ attenuation factor.
Test Procedure:	1. The RF output of EUT was connected to the spectrum analyzer by RF cable and attenuator. The path loss was compensated to the results for each measurement. 2. Set to the maximum power setting and enable the EUT transmit continuously. 3. Use the following spectrum analyzer settings for 20dB Bandwidth measurement. Span = approximately 2 to 5 times the 20 dB bandwidth, centered on a hopping channel; 1%≤RBW ≤5% of the 20 dB bandwidth; VBW≥3RBW; Sweep = auto; Detector function = peak; Trace = max hold. 4. Measure and record the results in the test report.
Limit:	NA
Exploratory Test Mode:	Non-hopping transmitting with all kind of modulation and all kind of data type
Final Test Mode:	Through Pre-scan, find the DH5 of data type is the worst case of GFSK modulation type, 2-DH5 of data type is the worst case of π/4DQPSK modulation type, 3-DH5 of data type is the worst case of 8DPSK modulation type.
Test Results:	Refer to Appendix A

4.5 Carrier Frequency Separation

Test Requirement:	47 CFR Part 15C Section 15.247 (a)(1)
Test Method:	ANSI C63.10-2020
Test Setup:	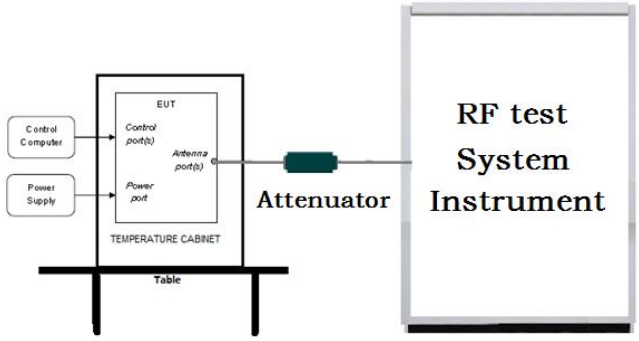 Remark: Offset=Cable loss+ attenuation factor.
Test Procedure:	1. The RF output of EUT was connected to the spectrum analyzer by RF cable and attenuator. The path loss was compensated to the results for each measurement. 2. Set to the maximum power setting and enable the EUT transmit continuously. 3. Enable the EUT hopping function. 4. Use the following spectrum analyzer settings: Span = wide enough to capture the peaks of two adjacent channels; RBW is set to approximately 30% of the channel spacing, adjust as necessary to best identify the center of each individual channel; VBW≥RBW; Sweep = auto; Detector function = peak; Trace = max hold. 5. Use the marker-delta function to determine the separation between the peaks of the adjacent channels. Record the value in report.
Limit:	Frequency hopping systems operating in the 2400-2483.5 MHz band may have hopping channel carrier frequencies that are separated by 25 kHz or two-thirds of the 20 dB bandwidth of the hopping channel, whichever is greater.
Exploratory Test Mode:	Hopping transmitting with all kind of modulation and all kind of data type
Final Test Mode:	Through Pre-scan, find the DH5 of data type is the worst case of GFSK modulation type, 2-DH5 of data type is the worst case of π/4DQPSK modulation type, 3-DH5 of data type is the worst case of 8DPSK modulation type.
Test Results:	Refer to Appendix A

4.6 Number of Hopping Channel

Test Requirement:	47 CFR Part 15C Section 15.247 (a)(1)
Test Method:	ANSI C63.10-2020
Test Setup:	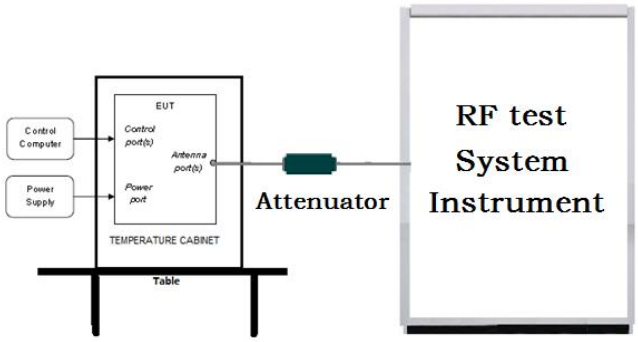 Remark: Offset=Cable loss+ attenuation factor.
Test Procedure:	1. The RF output of EUT was connected to the spectrum analyzer by RF cable and attenuator. The path loss was compensated to the results for each measurement. 2. Set to the maximum power setting and enable the EUT transmit continuously. 3. Enable the EUT hopping function. 4. Use the following spectrum analyzer settings: Span = the frequency band of operation; set the RBW to less than 30% of the channel spacing or the 20 dB bandwidth, whichever is smaller; VBW≥RBW; Sweep= auto; Detector function = peak; Trace = max hold. 5. The number of hopping frequency used is defined as the number of total channel. 6. Record the measurement data in report.
Limit:	Frequency hopping systems in the 2400-2483.5 MHz band shall use at least 15 channels.
Test Mode:	Hopping transmitting with all kind of modulation
Test Results:	Refer to Appendix A

4.7 Time of Occupancy

Test Requirement:	47 CFR Part 15C Section 15.247 (a)(1)
Test Method:	ANSI C63.10-2020
Test Setup:	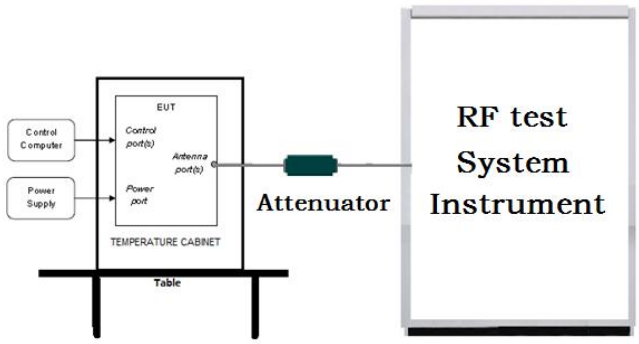 Remark: Offset=Cable loss+ attenuation factor.
Test Procedure:	1. The RF output of EUT was connected to the spectrum analyzer by RF cable and attenuator. The path loss was compensated to the results for each measurement. 2. Set to the maximum power setting and enable the EUT transmit continuously. 3. Enable the EUT hopping function. 4. Use the following spectrum analyzer settings: Span = zero span, centered on a hopping channel; RBW shall be ≤ channel spacing and where possible RBW should be set >> 1 / T, where T is the expected dwell time per channel; VBW≥RBW; Sweep = as necessary to capture the entire dwell time per hopping channel; Detector function = peak; Trace = max hold. 5. Measure and record the results in the test report.
Limit:	The average time of occupancy on any channel shall not be greater than 0.4 seconds within a period of 0.4 seconds multiplied by the number of hopping channels employed.
Test Mode:	Hopping transmitting with all kind of modulation and all kind of data type.
Test Results:	Refer to Appendix A

4.8 Band edge Measurements

Test Requirement:	47 CFR Part 15C Section 15.247 (d)
Test Method:	ANSI C63.10-2020
Test Setup:	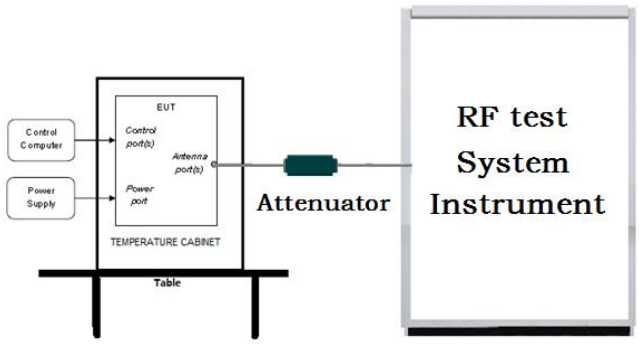 Remark: Offset=Cable loss+ attenuation factor.
Test Procedure:	1. Set to the maximum power setting and enable the EUT transmit continuously. 2. Set RBW = 100 kHz, VBW = 300 kHz (≥RBW). Band edge emissions must be at least 20 dB down from the highest emission level within the authorized band as measured with a 100kHz RBW. The attenuation shall be 30 dB instead of 20 dB when RMS conducted output power procedure is used. 3. Enable hopping function of the EUT and then repeat step 2 and 3. 4. Measure and record the results in the test report.
Limit:	In any 100 kHz bandwidth outside the frequency band in which the spread spectrum intentional radiator is operating, the radio frequency power that is produced by the intentional radiator shall be at least 20 dB below that in the 100 kHz bandwidth within the band that contains the highest level of the desired power, based on either an RF conducted or a radiated measurement.
Exploratory Test Mode:	Hopping and Non-hopping transmitting with all kind of modulation and all kind of data type
Final Test Mode:	Through Pre-scan, find the DH5 of data type is the worst case of GFSK modulation type, 2-DH5 of data type is the worst case of π/4DQPSK modulation type, 3-DH5 of data type is the worst case of 8DPSK modulation type.
Test Results:	Refer to Appendix A

4.9 Conducted Spurious Emissions

Test Requirement:	47 CFR Part 15C Section 15.247 (d)
Test Method:	ANSI C63.10-2020
Test Setup:	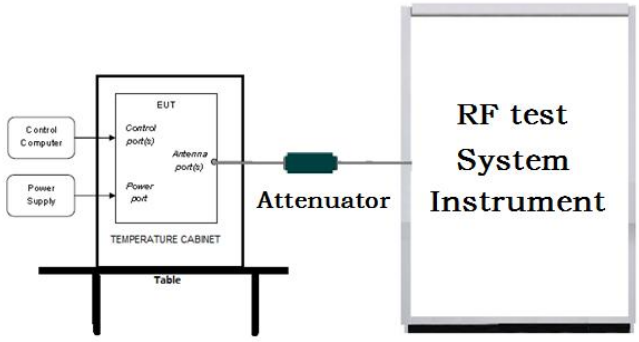 Remark: Offset=Cable loss+ attenuation factor.
Test Procedure:	1. The RF output of EUT was connected to the spectrum analyzer by RF cable and attenuator. The path loss was compensated to the results for each measurement. 2. Set to the maximum power setting and enable the EUT transmit continuously. 3. Set RBW = 100 kHz, VBW = 300kHz, scan up through 10th harmonic. All harmonics / spurs must be at least 20 dB down from the highest emission level within the authorized band as measured with a 100kHz RBW. 4. Measure and record the results in the test report. 5. The RF fundamental frequency should be excluded against the limit line in the operating frequency band.
Limit:	In any 100 kHz bandwidth outside the frequency band in which the spread spectrum intentional radiator is operating, the radio frequency power that is produced by the intentional radiator shall be at least 20 dB below that in the 100 kHz bandwidth within the band that contains the highest level of the desired power, based on either an RF conducted or a radiated measurement.
Exploratory Test Mode:	Non-hopping transmitting with all kind of modulation and all kind of data type
Final Test Mode:	Through Pre-scan, find the DH5 of data type is the worst case of GFSK modulation type, 2-DH5 of data type is the worst case of π/4DQPSK modulation type, 3-DH5 of data type is the worst case of 8DPSK modulation type.
Test Results:	Refer to Appendix A

4.10 Pseudorandom Frequency Hopping Sequence

Test Requirement:	47 CFR Part 15C Section 15.247 (a)(1), (h) requirement:

The system shall hop to channel frequencies that are selected at the system hopping rate from a Pseudorandom ordered list of hopping frequencies. Each frequency must be used equally on the average by each transmitter. The system receivers shall have input bandwidths that match the hopping channel bandwidths of their corresponding transmitters and shall shift frequencies in synchronization with the transmitted signals.

Frequency hopping spread spectrum systems are not required to employ all available hopping channels during each transmission. However, the system, consisting of both the transmitter and the receiver, must be designed to comply with all of the regulations in this section should the transmitter be presented with a continuous data (or information) stream. In addition, a system employing short transmission bursts must comply with the definition of a frequency hopping system and must distribute its transmissions over the minimum number of hopping channels specified in this section.

The incorporation of intelligence within a frequency hopping spread spectrum system that permits the system to recognize other users within the spectrum band so that it individually and independently chooses and adapts its hopsets to avoid hopping on occupied channels is permitted. The coordination of frequency hopping systems in any other manner for the express purpose of avoiding the simultaneous occupancy of individual hopping frequencies by multiple transmitters is not permitted.

Compliance for section 15.247(a)(1)

According to Bluetooth Core Specification, the pseudorandom sequence may be generated in a nine-stage shift register whose 5th and 9th stage
outputs are added in a modulo-two addition stage. And the result is fed back to the input of the first stage. The sequence begins with the first ONE of 9 consecutive ONEs; i.e. the shift register is initialized with nine ones.

- Number of shift register stages: 9
- Length of pseudo-random sequence: 2^9 -1 = 511 bits
- Longest sequence of zeros: 8 (non-inverted signal)

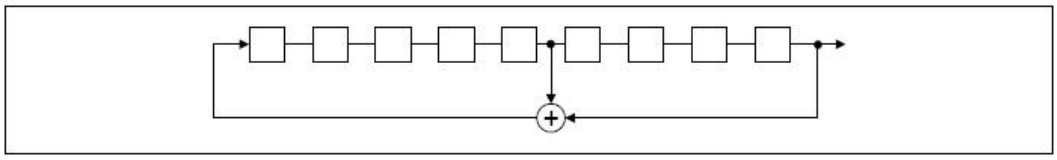

Linear Feedback Shift Register for Generation of the PRBS sequence

An example of Pseudorandom Frequency Hopping Sequence as follow:

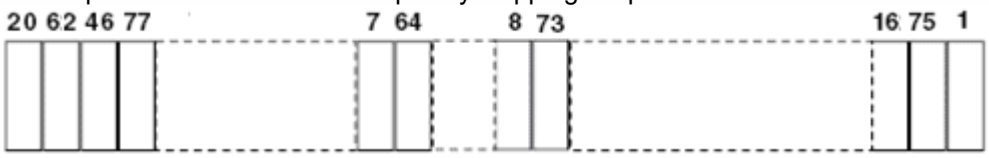

Each frequency used equally on the average by each transmitter.

According to Bluetooth Core Specification, Bluetooth receivers are designed to have input and IF bandwidths that match the hopping channel bandwidths of any Bluetooth transmitters and shift frequencies in synchronization with the transmitted signals.

Compliance for section 15.247(g)

According to Bluetooth Core Specification, the Bluetooth system transmits the packet with the

pseudorandom hopping frequency with a continuous data and the short burst transmission from the Bluetooth system is also transmitted under the frequency hopping system with the pseudorandom hopping frequency system.
Compliance for section 15.247(h)
According to Bluetooth Core specification, the Bluetooth system incorporates with an adaptive system to detect other user within the spectrum band so that it individually and independently to avoid hopping on the occupied channels. According to the Bluetooth Core specification, the Bluetooth system is designed not have the ability to coordinated with other FHSS System in an effort to avoid the simultaneous occupancy of individual hopping frequencies by multiple transmitter.

4.11 Radiated Spurious Emission & Restricted bands

Test Requirement:	47 CFR Part 15C Section 15.209 and 15.205
Test Method:	ANSI C63.10-2020
Test Site:	Measurement Distance: 3m (Semi-Anechoic Chamber)
Receiver Setup:	

Frequency	Detector	RBW	VBW	Remark
0.009MHz-0.090MHz	Peak	10kHz	30kHz	Peak
0.009MHz-0.090MHz	Average	10kHz	30kHz	Average
0.090MHz-0.110MHz	Quasi-peak	10kHz	30kHz	Quasi-peak
0.110MHz-0.490MHz	Peak	10kHz	30kHz	Peak
0.110MHz-0.490MHz	Average	10kHz	30kHz	Average
0.490MHz -30MHz	Quasi-peak	10kHz	30kHz	Quasi-peak
30MHz-1GHz	Peak	100 kHz	300kHz	Peak
Above 1GHz	Peak	1MHz	3MHz	Peak
	Peak	1MHz	10kHz	Average

Limit:

Frequency	Field strength (microvolt/meter)	Limit (dBuV/m)	Remark	Measurement distance (m)
0.009MHz-0.490MHz	2400/F(kHz)	-	-	300
0.490MHz-1.705MHz	24000/F(kHz)	-	-	30
1.705MHz-30MHz	30	-	-	30
30MHz-88MHz	100	40.0	Quasi-peak	3
88MHz-216MHz	150	43.5	Quasi-peak	3
216MHz-960MHz	200	46.0	Quasi-peak	3
960MHz-1GHz	500	54.0	Quasi-peak	3
Above 1GHz	500	54.0	Average	3

Note: 15.35(b), Unless otherwise specified, the limit on peak radio frequency emissions is 20dB above the maximum permitted average emission limit applicable to the equipment under test. This peak limit applies to the total peak emission level radiated by the device.

Test Setup:	

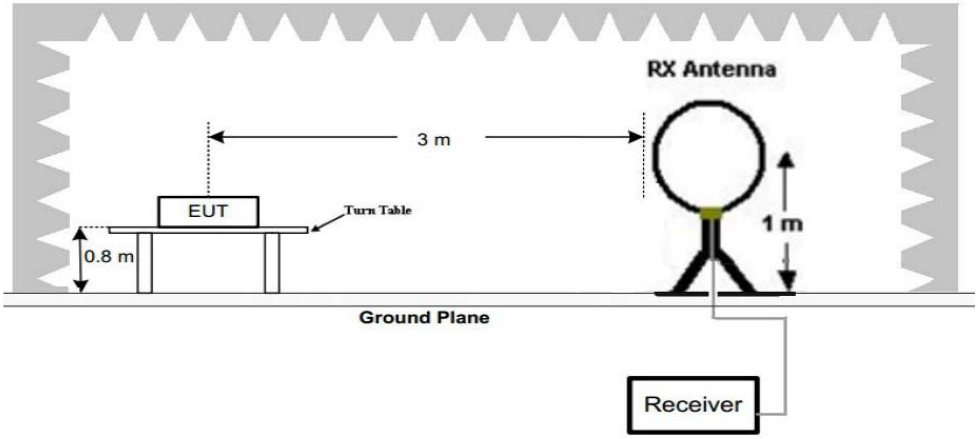

Figure 1. Below 30MHz

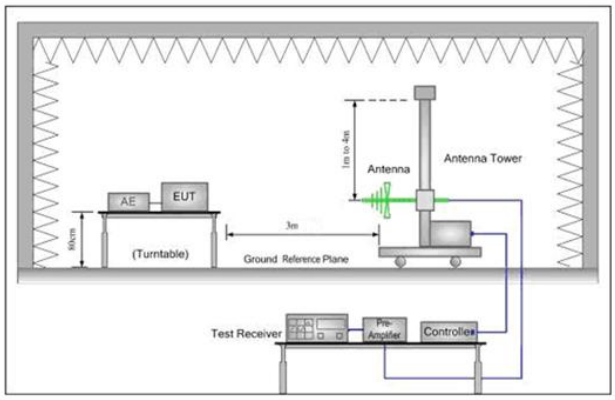

Figure 2. 30MHz to 1GHz

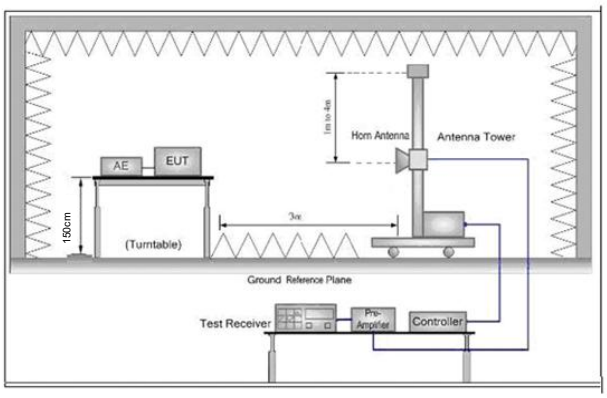

Figure 3. Above 1 GHz

Test Procedure:	a. 1) Below 1G: The EUT was placed on the top of a rotating table 0.8 meters above the ground at a 3 meter semi-anechoic camber. The table was rotated 360 degrees to determine the position of the highest radiation. 2) Above 1G: The EUT was placed on the top of a rotating table 1.5 meters above the ground at a 3 meter semi-anechoic camber. The table was rotated 360 degrees to determine the position of the highest radiation. Note: For the radiated emission test above 1GHz: Place the measurement antenna away from each area of the EUT determined to be a source of emissions at the specified measurement distance, while keeping the measurement antenna aimed at the source of emissions at each frequency of significant emissions, with polarization oriented for maximum response. The measurement antenna may have to be higher or lower than the EUT, depending on the radiation pattern of the emission and staying aimed at the emission source for receiving the maximum signal. The final measurement antenna elevation shall be that which maximizes the emissions. The measurement antenna elevation for maximum emissions shall be restricted to a range of heights of from 1 m to 4 m above the ground or reference ground plane. b. The EUT was set 3 meters away from the interference-receiving antenna, which was mounted on the top of a variable-height antenna tower. c. The antenna height is varied from one meter to four meters above the ground to determine the maximum value of the field strength. Both

	horizontal and vertical polarizations of the antenna are set to make the measurement. d. For each suspected emission, the EUT was arranged to its worst case and then the antenna was tuned to heights from 1 meter to 4 meters (for the test frequency of below 30MHz, the antenna was tuned to heights 1 meter) and the rotatable table was turned from 0 degrees to 360 degrees to find the maximum reading. e. The test-receiver system was set to Peak Detect Function and Specified Bandwidth with Maximum Hold Mode. f. If the emission level of the EUT in peak mode was 10dB lower than the limit specified, then testing could be stopped and the peak values of the EUT would be reported. Otherwise the emissions that did not have 10dB margin would be re-tested one by one using peak, quasi-peak or average method as specified and then reported in a data sheet. g. Test the EUT in the lowest channel (2402MHz),the middle channel (2441MHz),the Highest channel (2480MHz) h. The radiation measurements are performed in X, Y, Z axis positioning for Transmitting mode, and found the X axis positioning which it is the worst case. i. Repeat above procedures until all frequencies measured was complete.
Exploratory Test Mode:	Non-hopping transmitting mode with all kind of modulation and all kind of data type
Final Test Mode:	Through Pre-scan, find the DH5 of data type and GFSK modulation is the worst case. Pretest the EUT at Transmitting mode, For below 1GHz part, through pre-scan, the worst case is the lowest channel. Only the worst case is recorded in the report.
Test Results:	Pass

Radiated Spurious Emission below 1GHz:

During the test, the Radiates Emission from 30MHz to 1GHz was performed in all modes, only the worst case lowest channel of DH5 for GFSK was recorded in the report.

Test Graph

Horizontal:

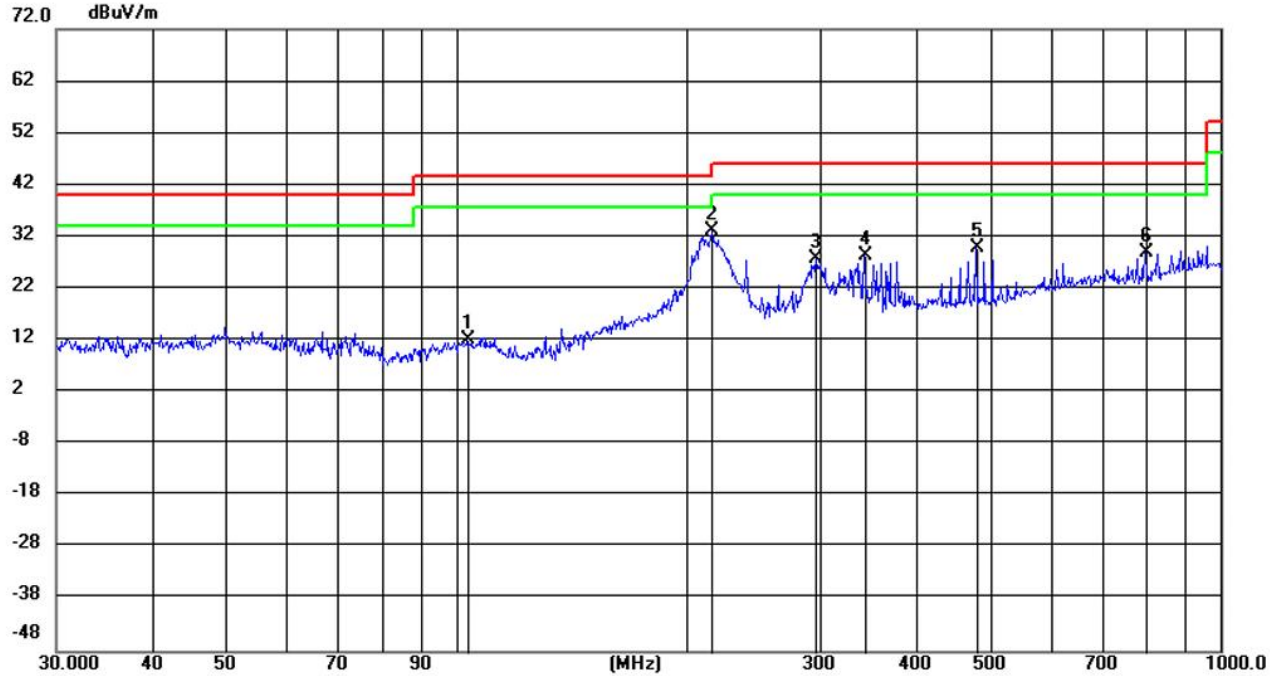

No.	Mk.	Freq.	Reading Level	Correct Factor	Measure-ment	Limit	Margin		Antenna Height	Table Degree	
		MHz	dBuV	dB/m	dBuV/m	dBuV/m	dB	Detector	cm	degree	Comment
1		103.4602	-1.42	13.67	12.25	43.50	-31.25	QP	100	59	
2	*	216.0239	19.94	13.09	33.03	46.00	-12.97	QP	100	24	
3		295.9241	11.48	16.16	27.64	46.00	-18.36	QP	100	16	
4		343.0595	10.49	17.75	28.24	46.00	-17.76	QP	100	250	
5		480.0223	9.45	20.27	29.72	46.00	-16.28	QP	100	319	
6		797.7199	4.30	24.69	28.99	46.00	-17.01	QP	100	276	

Remark:

1. Margin=Measurement(Level)-Limit.

2. Measurement(Level)=Reading Level+Correct Factor.

3. In the test results, an asterisk (*) indicates Maximum Data, a cross (X) indicates over Limit, an exclamation mark (!) indicates over -6dB margin Limit.

Vertical:

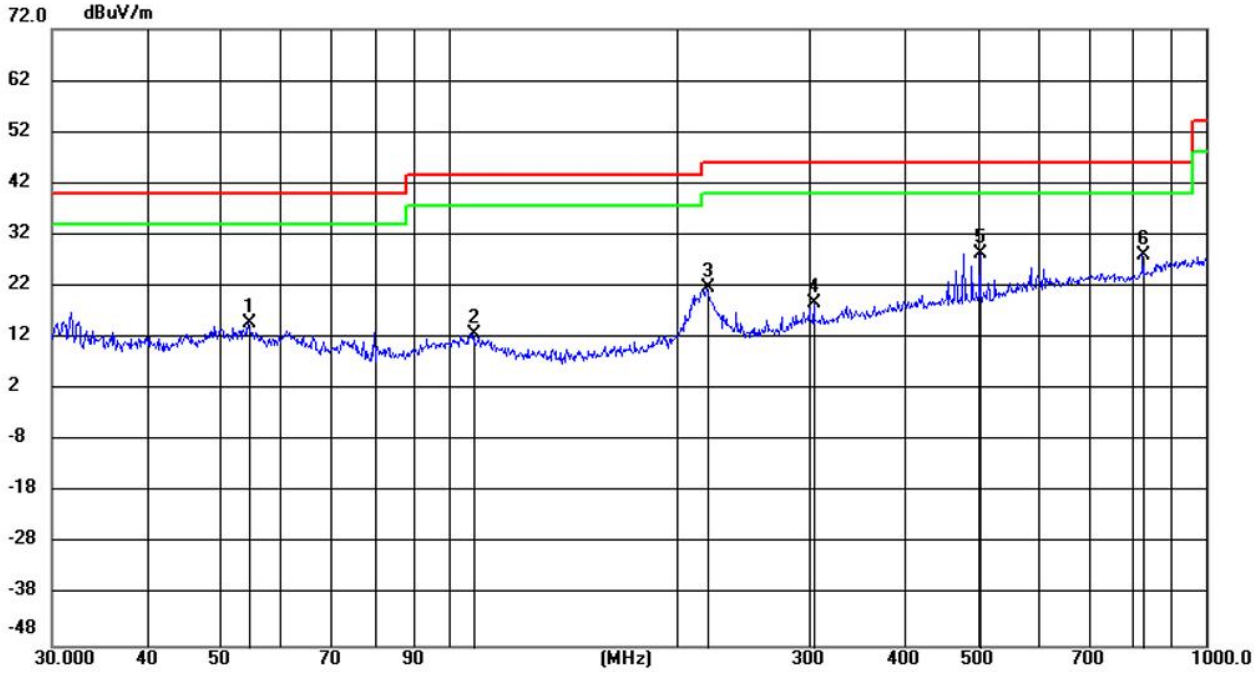

No.	Mk.	Freq.	Reading Level	Correct Factor	Measure-ment	Limit	Margin		Antenna Height	Table Degree	
		MHz	dBuV	dB/m	dBuV/m	dBuV/m	dB	Detector	cm	degree	Comment
1		54.6046	0.58	14.13	14.71	40.00	-25.29	QP	100	6	
2		108.1718	-1.16	13.99	12.83	43.50	-30.67	QP	100	150	
3		219.3444	8.53	13.19	21.72	46.00	-24.28	QP	100	107	
4		304.1830	2.22	16.46	18.68	46.00	-27.32	QP	100	351	
5	*	503.9988	7.56	20.67	28.23	46.00	-17.77	QP	100	159	
6		826.1887	2.84	25.36	28.20	46.00	-17.80	QP	100	234	

Remark:

1. Margin=Measurement(Level)-Limit.
2. Measurement(Level)=Reading Level+Correct Factor.
3. In the test results, an asterisk (*) indicates Maximum Data, a cross (X) indicates over Limit, an exclamation mark (!) indicates over -6dB margin Limit.

Radiated Spurious Emission above 1GHz:

During the test, the Radiated Spurious Emission from above 1GHz was performed in all modes, only the worst case GFSK mode was recorded in the report.

Test_Mode	GFSK Transmitting	Test_Frequency	2402Mhz
Ant	/	Test_Date	2026/2/3

Test Graph

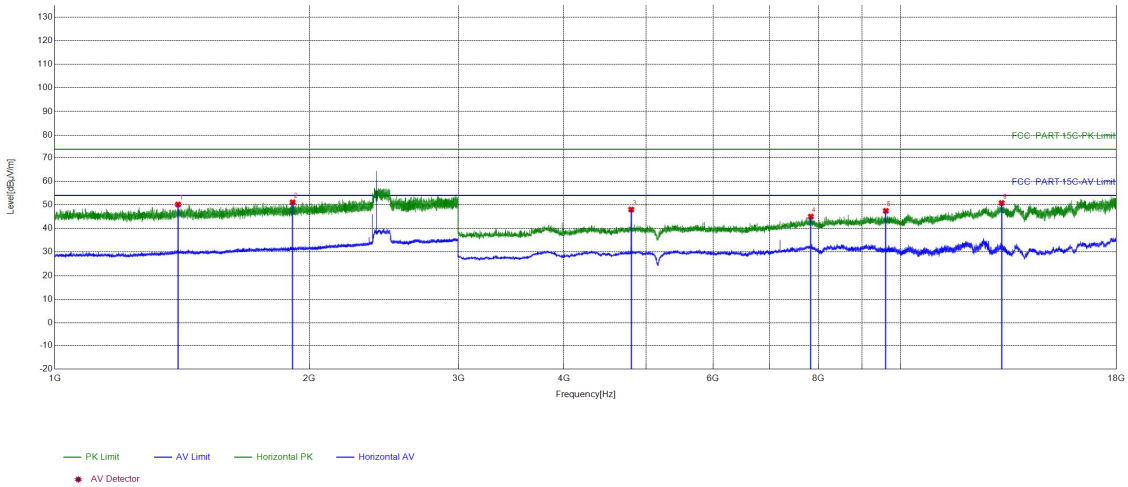

Suspected List									
NO	Freq. [MHz]	Factor [dB]	Reading [dBμV]	Level [dBμV/m]	Limit [dBμV/m]	Margin [dB]	Result	Polarity	Remark
1	1398.6932	12.78	37.39	50.17	74.00	23.83	PASS	Horizontal	PK
2	1910.8607	14.81	36.27	51.08	74.00	22.92	PASS	Horizontal	PK
3	4804.1203	-8.60	56.62	48.02	74.00	25.98	PASS	Horizontal	PK
4	7834.3223	-1.77	46.81	45.04	74.00	28.96	PASS	Horizontal	PK
5	9608.4406	1.37	46.09	47.46	74.00	26.54	PASS	Horizontal	PK
6	13168.6779	6.37	44.42	50.79	74.00	23.21	PASS	Horizontal	PK

Test_Mode	GFSK Transmitting	Test_Frequency	2402Mhz
Ant	/	Test_Date	2026/2/3

Test Graph

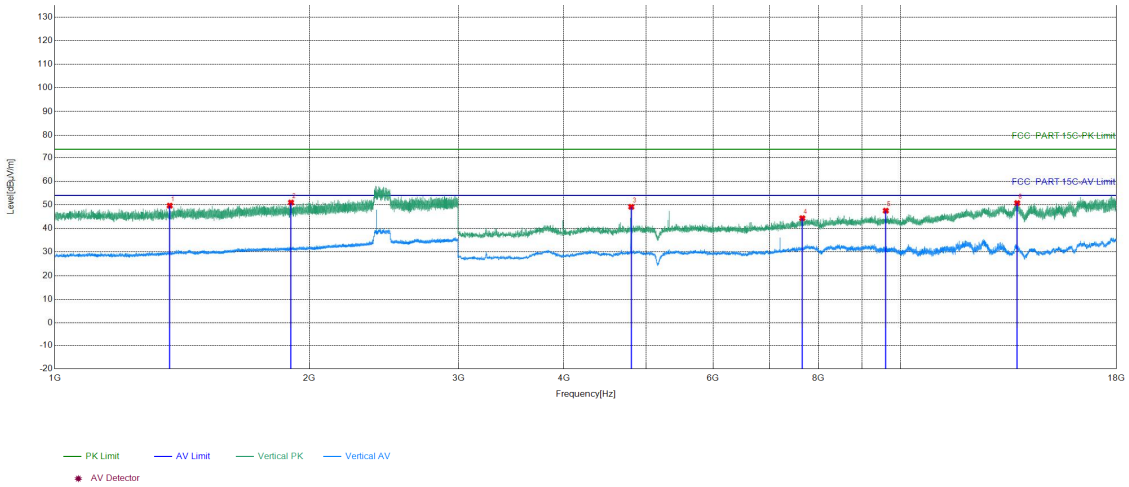

Suspected List									
NO	Freq. [MHz]	Factor [dB]	Reading [dBμV]	Level [dBμV/m]	Limit [dBμV/m]	Margin [dB]	Result	Polarity	Remark
1	1367.3578	12.69	36.97	49.66	74.00	24.34	PASS	Vertical	PK
2	1902.4602	14.65	36.34	50.99	74.00	23.01	PASS	Vertical	PK
3	4804.1203	-8.60	57.77	49.17	74.00	24.83	PASS	Vertical	PK
4	7654.3103	-2.22	46.56	44.34	74.00	29.66	PASS	Vertical	PK
5	9607.4405	1.38	46.14	47.52	74.00	26.48	PASS	Vertical	PK
6	13739.716	7.19	43.56	50.75	74.00	23.25	PASS	Vertical	PK

Test_Mode	GFSK Transmitting	Test_Frequency	2402Mhz
Ant	/	Test_Date	2026/2/3

Test Graph

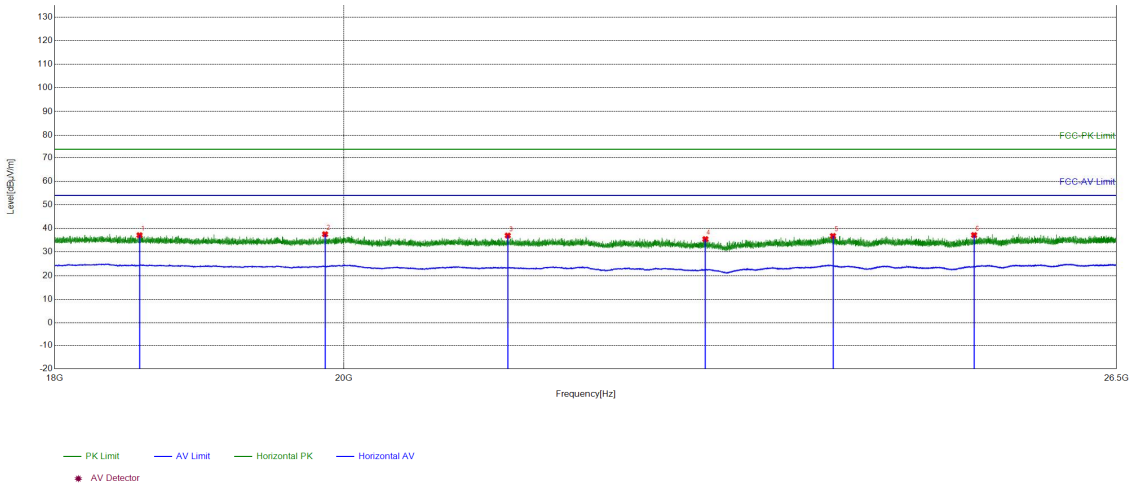

Suspected List									
NO	Freq. [MHz]	Factor [dB]	Reading [dBμV]	Level [dBμV/m]	Limit [dBμV/m]	Margin [dB]	Result	Polarity	Remark
1	18564.0826	-26.69	63.83	37.14	74.00	36.86	PASS	Horizontal	PK
2	19862.5945	-25.04	62.59	37.55	74.00	36.45	PASS	Horizontal	PK
3	21229.4492	-25.77	62.76	36.99	74.00	37.01	PASS	Horizontal	PK
4	22814.2526	-25.09	60.57	35.48	74.00	38.52	PASS	Horizontal	PK
5	23899.916	-22.14	58.95	36.81	74.00	37.19	PASS	Horizontal	PK
6	25160.6864	-21.26	58.46	37.20	74.00	36.80	PASS	Horizontal	PK

Test_Mode	GFSK Transmitting	Test_Frequency	2402Mhz
Ant	/	Test_Date	2026/2/3

Test Graph

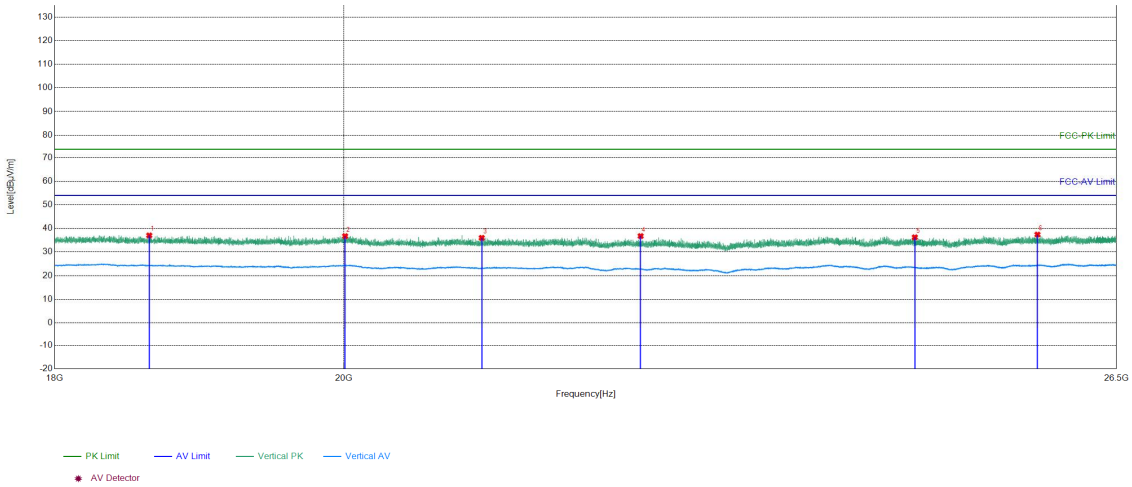

Suspected List									
NO	Freq. [MHz]	Factor [dB]	Reading [dBμV]	Level [dBμV/m]	Limit [dBμV/m]	Margin [dB]	Result	Polarity	Remark
1	18630.0452	-26.63	63.67	37.04	74.00	36.96	PASS	Vertical	PK
2	20008.1203	-24.66	61.40	36.74	74.00	37.26	PASS	Vertical	PK
3	21029.1812	-25.96	61.97	36.01	74.00	37.99	PASS	Vertical	PK
4	22282.4713	-25.28	62.05	36.77	74.00	37.23	PASS	Vertical	PK
5	24623.4649	-21.88	58.13	36.25	74.00	37.75	PASS	Vertical	PK
6	25748.5699	-20.79	58.19	37.40	74.00	36.60	PASS	Vertical	PK

Test_Mode	GFSK Transmitting	Test_Frequency	2441Mhz
Ant	/	Test_Date	2026/2/3

Test Graph

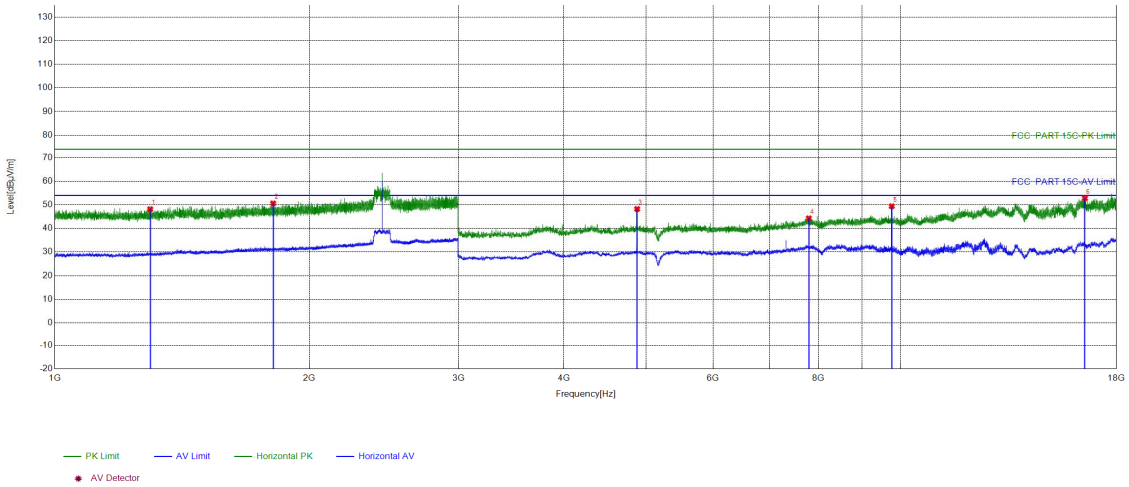

Suspected List									
NO	Freq. [MHz]	Factor [dB]	Reading [dBμV]	Level [dBμV/m]	Limit [dBμV/m]	Margin [dB]	Result	Polarity	Remark
1	1296.5531	12.06	36.10	48.16	74.00	25.84	PASS	Horizontal	PK
2	1811.9208	14.29	36.34	50.63	74.00	23.37	PASS	Horizontal	PK
3	4882.1255	-8.36	56.60	48.24	74.00	25.76	PASS	Horizontal	PK
4	7790.3194	-1.96	46.25	44.29	74.00	29.71	PASS	Horizontal	PK
5	9763.4509	1.24	48.19	49.43	74.00	24.57	PASS	Horizontal	PK
6	16519.9013	11.90	40.90	52.80	74.00	21.20	PASS	Horizontal	PK

Test_Mode	GFSK Transmitting	Test_Frequency	2441Mhz
Ant	/	Test_Date	2026/2/3

Test Graph

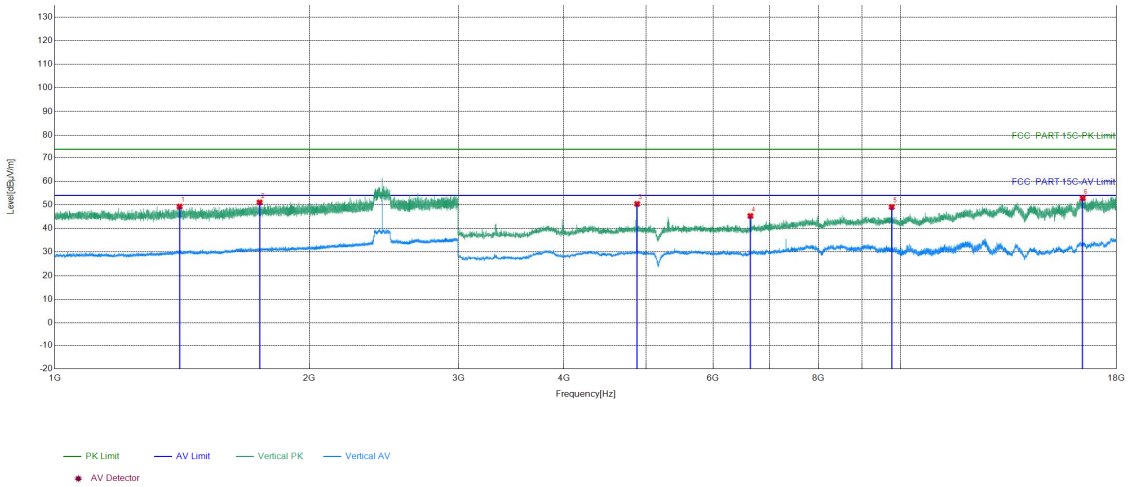

Suspected List									
NO	Freq. [MHz]	Factor [dB]	Reading [dBμV]	Level [dBμV/m]	Limit [dBμV/m]	Margin [dB]	Result	Polarity	Remark
1	1404.6936	12.84	36.46	49.30	74.00	24.70	PASS	Vertical	PK
2	1746.3164	14.09	36.97	51.06	74.00	22.94	PASS	Vertical	PK
3	4882.1255	-8.36	58.76	50.40	74.00	23.60	PASS	Vertical	PK
4	6645.243	-3.97	49.26	45.29	74.00	28.71	PASS	Vertical	PK
5	9763.4509	1.24	47.84	49.08	74.00	24.92	PASS	Vertical	PK
6	16421.8948	10.41	42.39	52.80	74.00	21.20	PASS	Vertical	PK

Test_Mode	GFSK Transmitting	Test_Frequency	2441Mhz
Ant	/	Test_Date	2026/2/3

Test Graph

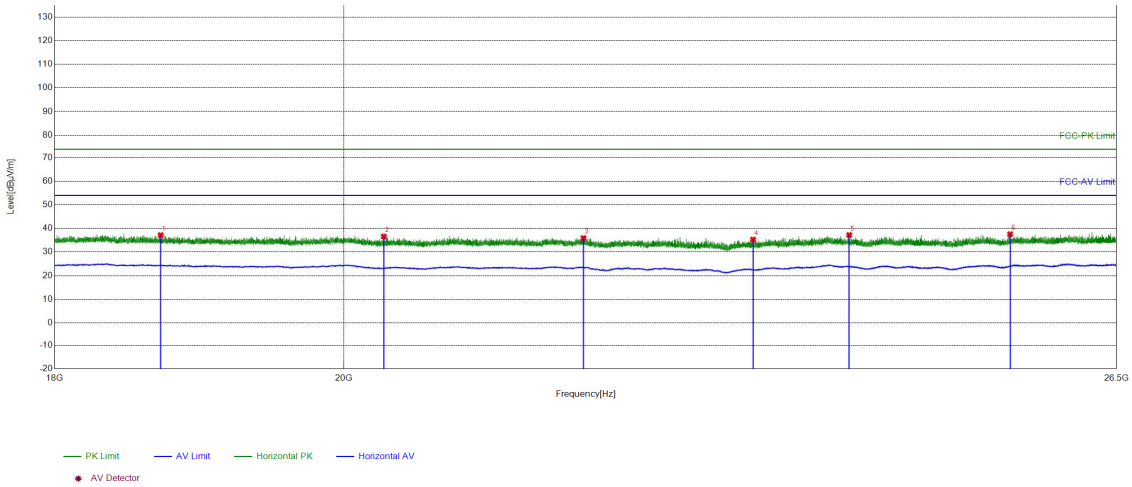

Suspected List									
NO	Freq. [MHz]	Factor [dB]	Reading [dBμV]	Level [dBμV/m]	Limit [dBμV/m]	Margin [dB]	Result	Polarity	Remark
1	18707.9083	-26.47	63.65	37.18	74.00	36.82	PASS	Horizontal	PK
2	20292.0317	-25.50	62.11	36.61	74.00	37.39	PASS	Horizontal	PK
3	21823.4529	-25.57	61.50	35.93	74.00	38.07	PASS	Horizontal	PK
4	23214.1086	-24.22	59.49	35.27	74.00	38.73	PASS	Horizontal	PK
5	24041.7017	-22.09	59.32	37.23	74.00	36.77	PASS	Horizontal	PK
6	25493.5597	-21.10	58.66	37.56	74.00	36.44	PASS	Horizontal	PK

Test_Mode	GFSK Transmitting	Test_Frequency	2441Mhz
Ant	/	Test_Date	2026/2/3

Test Graph

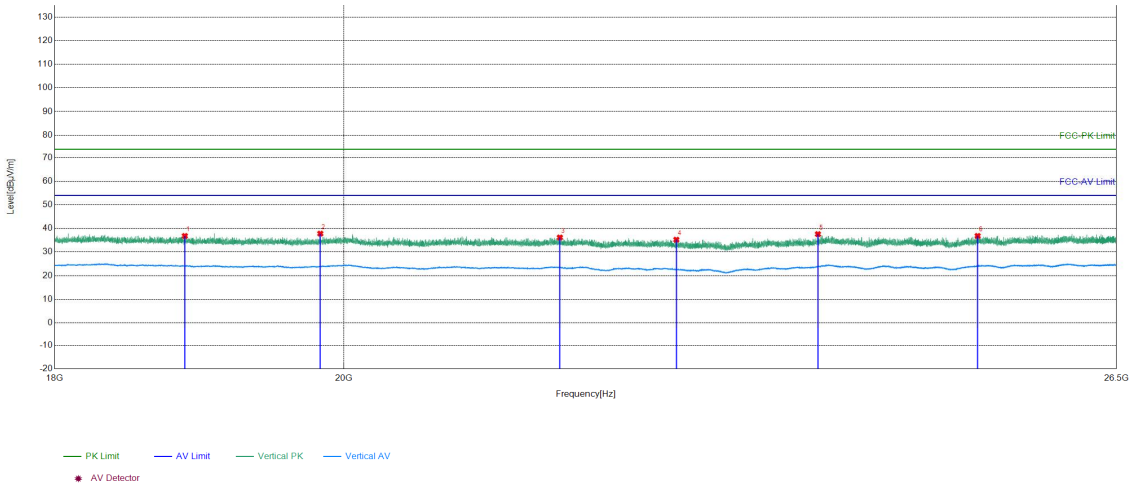

Suspected List									
NO	Freq. [MHz]	Factor [dB]	Reading [dBμV]	Level [dBμV/m]	Limit [dBμV/m]	Margin [dB]	Result	Polarity	Remark
1	18873.1549	-26.28	63.09	36.81	74.00	37.19	PASS	Vertical	PK
2	19828.2531	-25.14	62.95	37.81	74.00	36.19	PASS	Vertical	PK
3	21636.4455	-25.70	61.88	36.18	74.00	37.82	PASS	Vertical	PK
4	22574.203	-25.02	60.26	35.24	74.00	38.76	PASS	Vertical	PK
5	23769.3508	-22.44	60.04	37.60	74.00	36.40	PASS	Vertical	PK
6	25193.3277	-21.08	57.93	36.85	74.00	37.15	PASS	Vertical	PK

Test_Mode	GFSK Transmitting	Test_Frequency	2480Mhz
Ant	/	Test_Date	2026/2/3

Test Graph

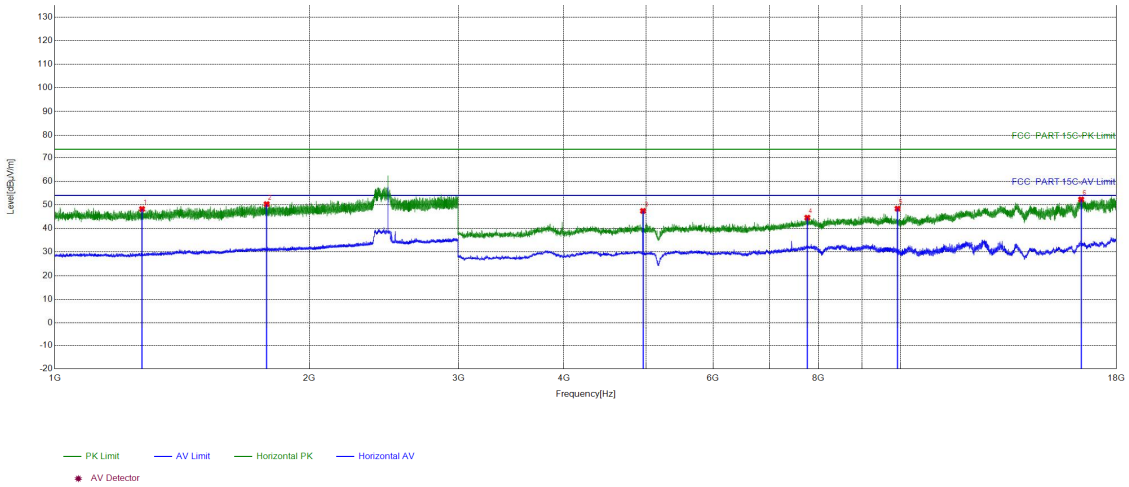

Suspected List									
NO	Freq. [MHz]	Factor [dB]	Reading [dBμV]	Level [dBμV/m]	Limit [dBμV/m]	Margin [dB]	Result	Polarity	Remark
1	1268.0179	11.91	36.33	48.24	74.00	25.76	PASS	Horizontal	PK
2	1780.452	14.28	36.03	50.31	74.00	23.69	PASS	Horizontal	PK
3	4960.1307	-8.05	55.48	47.43	74.00	26.57	PASS	Horizontal	PK
4	7760.3174	-1.57	46.14	44.57	74.00	29.43	PASS	Horizontal	PK
5	9919.4613	1.49	46.90	48.39	74.00	25.61	PASS	Horizontal	PK
6	16351.8901	11.53	40.77	52.30	74.00	21.70	PASS	Horizontal	PK

Test_Mode	GFSK Transmitting	Test_Frequency	2480Mhz
Ant	/	Test_Date	2026/2/3

Test Graph

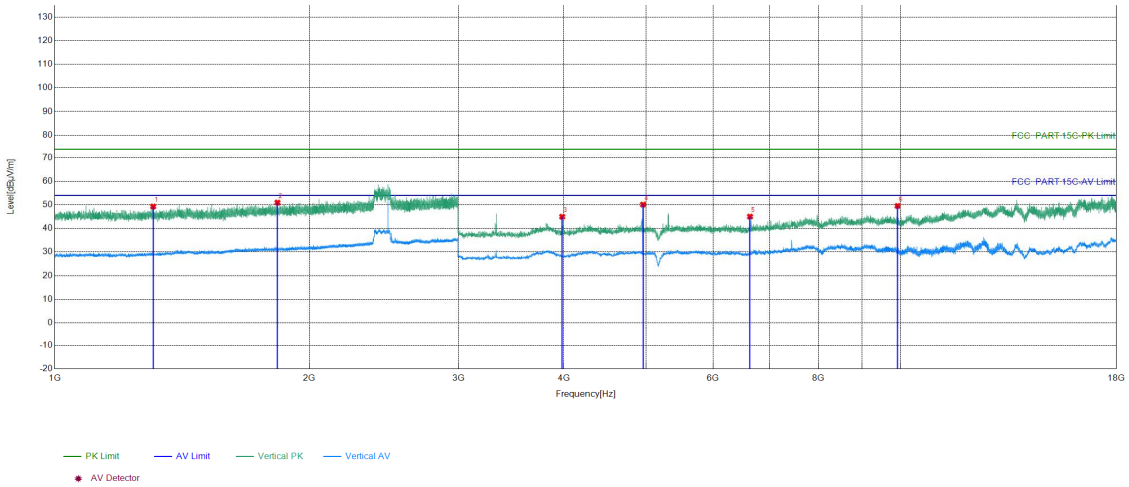

Suspected List									
NO	Freq. [MHz]	Factor [dB]	Reading [dBμV]	Level [dBμV/m]	Limit [dBμV/m]	Margin [dB]	Result	Polarity	Remark
1	1307.0871	12.15	37.17	49.32	74.00	24.68	PASS	Vertical	PK
2	1833.3889	14.34	36.63	50.97	74.00	23.03	PASS	Vertical	PK
3	3981.0654	-11.77	56.75	44.98	74.00	29.02	PASS	Vertical	PK
4	4960.1307	-8.05	58.18	50.13	74.00	23.87	PASS	Vertical	PK
5	6638.2426	-3.96	49.00	45.04	74.00	28.96	PASS	Vertical	PK
6	9919.4613	1.49	48.06	49.55	74.00	24.45	PASS	Vertical	PK

Test_Mode	GFSK Transmitting	Test_Frequency	2480Mhz
Ant	/	Test_Date	2026/2/3

Test Graph

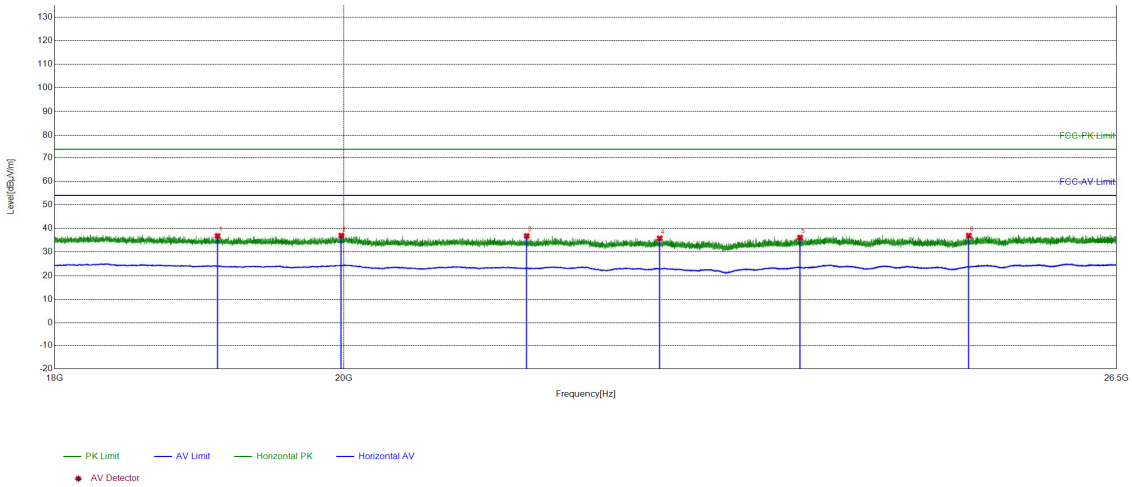

Suspected List									
NO	Freq. [MHz]	Factor [dB]	Reading [dBμV]	Level [dBμV/m]	Limit [dBμV/m]	Margin [dB]	Result	Polarity	Remark
1	19099.604	-26.17	62.99	36.82	74.00	37.18	PASS	Horizontal	PK
2	19980.2392	-24.68	61.63	36.95	74.00	37.05	PASS	Horizontal	PK
3	21376.6751	-25.86	62.68	36.82	74.00	37.18	PASS	Horizontal	PK
4	22437.8575	-25.08	60.90	35.82	74.00	38.18	PASS	Horizontal	PK
5	23615.3246	-23.00	59.15	36.15	74.00	37.85	PASS	Horizontal	PK
6	25112.7445	-21.52	58.49	36.97	74.00	37.03	PASS	Horizontal	PK

Test_Mode	GFSK Transmitting	Test_Frequency	2480Mhz
Ant	/	Test_Date	2026/2/3

Test Graph

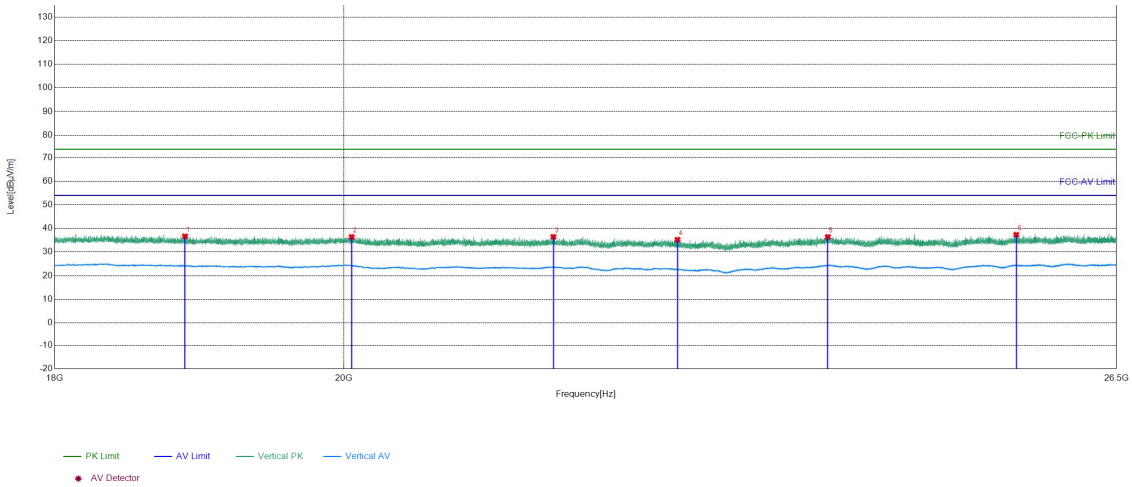

Suspected List									
NO	Freq. [MHz]	Factor [dB]	Reading [dBμV]	Level [dBμV/m]	Limit [dBμV/m]	Margin [dB]	Result	Polarity	Remark
1	18874.515	-26.28	62.96	36.68	74.00	37.32	PASS	Vertical	PK
2	20056.4023	-24.87	61.27	36.40	74.00	37.60	PASS	Vertical	PK
3	21585.4434	-25.75	62.20	36.45	74.00	37.55	PASS	Vertical	PK
4	22583.7233	-25.01	60.25	35.24	74.00	38.76	PASS	Vertical	PK
5	23855.3742	-22.22	58.62	36.40	74.00	37.60	PASS	Vertical	PK
6	25550.682	-20.89	58.24	37.35	74.00	36.65	PASS	Vertical	PK

Remark:

1) The field strength is calculated by adding the Antenna Factor, Cable Factor & Preamplifier. The basic equation with a sample calculation is as follows:

   Final Test Level =Receiver Reading + Antenna Factor + Cable Factor – Preamplifier Factor

2) Scan from 9kHz to 25GHz, the disturbance above 10GHz and below 30MHz was very low. As shown in this section, for frequencies above 1GHz, the field strength limits are based on average limits. However, the peak field strength of any emission shall not exceed the maximum permitted average limits specified above by more than 20 dB under any condition of modulation. As the PK values are all below 54dBμV/m. So, only the peak measurements were shown in the report.

Restricted bands:

Test_Mode	GFSK Transmitting	Test_Frequency	2402Mhz
Ant	/	Test_Date	2026/2/3

Test Graph

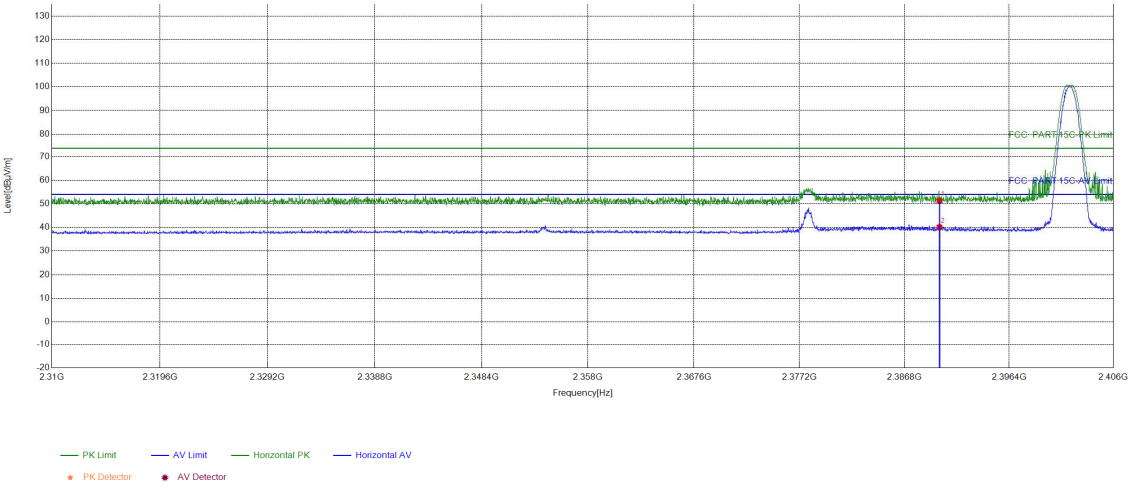

Suspected List									
NO	Freq. [MHz]	Factor [dB]	Reading [dBμV]	Level [dBμV/m]	Limit [dBμV/m]	Margin [dB]	Result	Polarity	Remark
1	2390	15.96	35.34	51.30	74.00	22.70	PASS	Horizontal	PK
2	2390	15.96	24.17	40.13	54.00	13.87	PASS	Horizontal	AV

Test_Mode	GFSK Transmitting	Test_Frequency	2402Mhz
Ant	/	Test_Date	2026/2/3

Test Graph

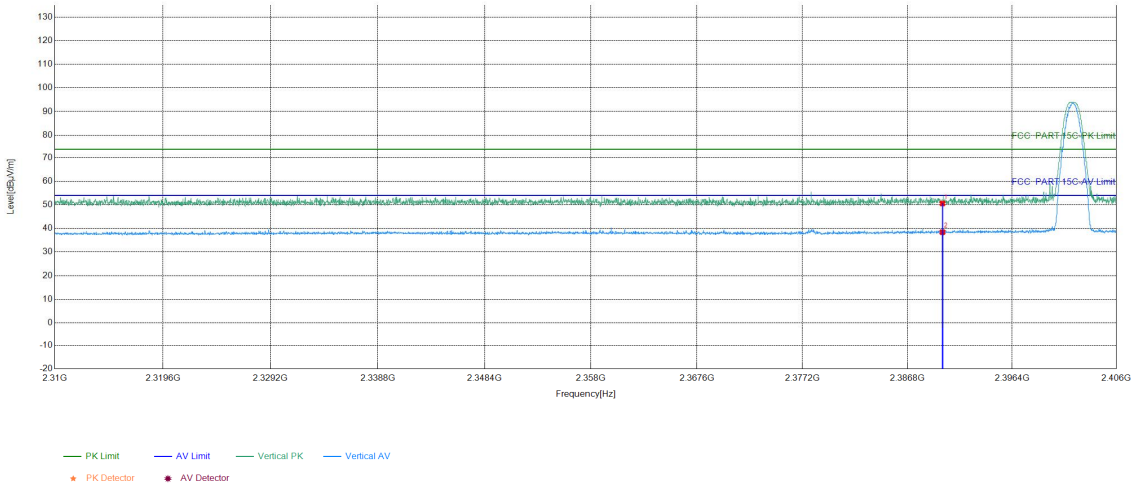

Suspected List									
NO	Freq. [MHz]	Factor [dB]	Reading [dBμV]	Level [dBμV/m]	Limit [dBμV/m]	Margin [dB]	Result	Polarity	Remark
1	2390	15.96	34.65	50.61	74.00	23.39	PASS	Vertical	PK
2	2390	15.96	22.45	38.41	54.00	15.59	PASS	Vertical	AV

Test_Mode	GFSK Transmitting	Test_Frequency	2480Mhz
Ant	/	Test_Date	2026/2/3

Test Graph

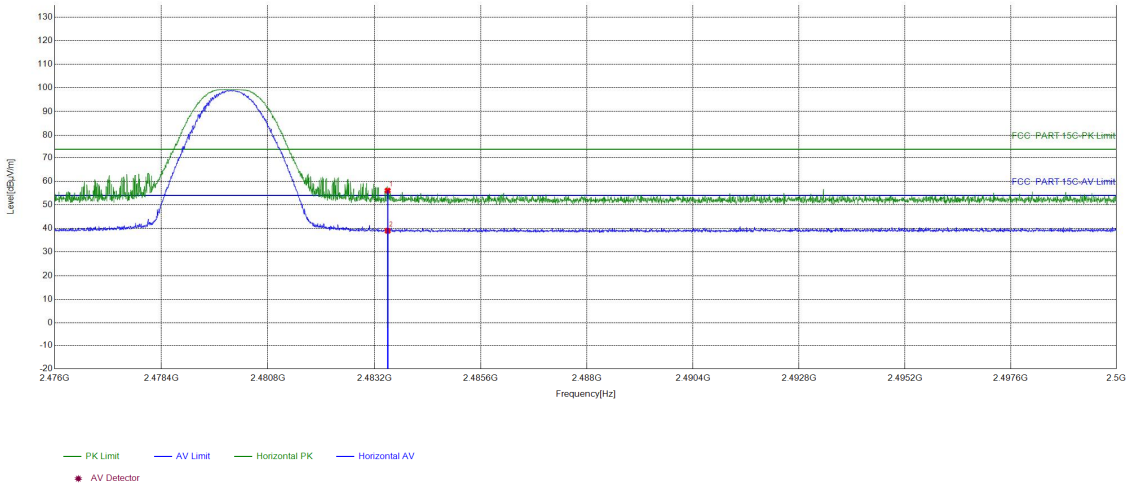

Suspected List									
NO	Freq. [MHz]	Factor [dB]	Reading [dBμV]	Level [dBμV/m]	Limit [dBμV/m]	Margin [dB]	Result	Polarity	Remark
1	2483.5	16.29	39.76	56.05	74.00	17.95	PASS	Horizontal	PK
2	2483.5	16.29	22.72	39.01	54.00	14.99	PASS	Horizontal	AV

Test_Mode	GFSK Transmitting	Test_Frequency	2480Mhz
Ant	/	Test_Date	2026/2/3

Test Graph

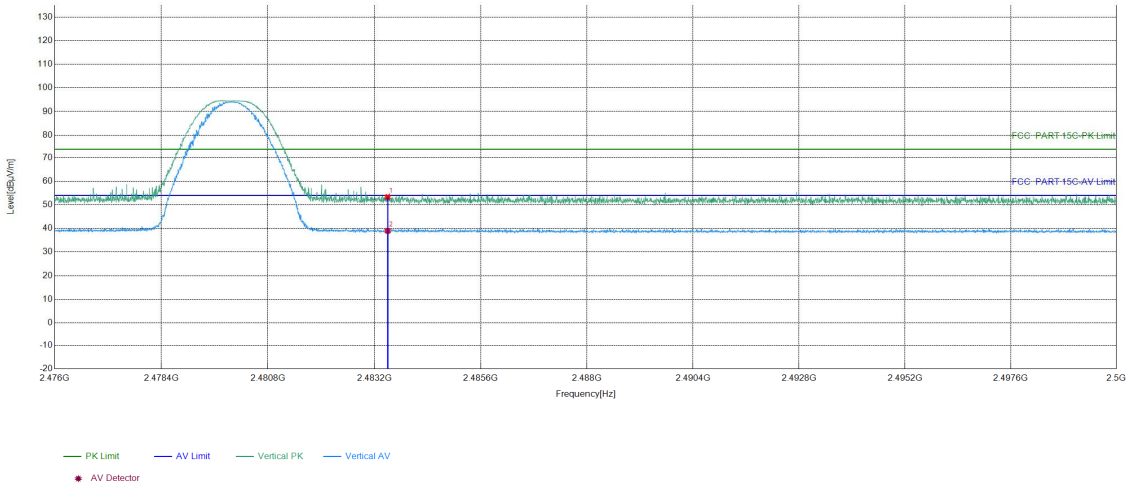

Suspected List									
NO	Freq. [MHz]	Factor [dB]	Reading [dBμV]	Level [dBμV/m]	Limit [dBμV/m]	Margin [dB]	Result	Polarity	Remark
1	2483.5	16.29	37.00	53.29	74.00	20.71	PASS	Vertical	PK
2	2483.5	16.29	22.69	38.98	54.00	15.02	PASS	Vertical	AV

Test_Mode	π/4DQPSK Transmitting	Test_Frequency	2402Mhz
Ant	/	Test_Date	2026/2/3

Test Graph

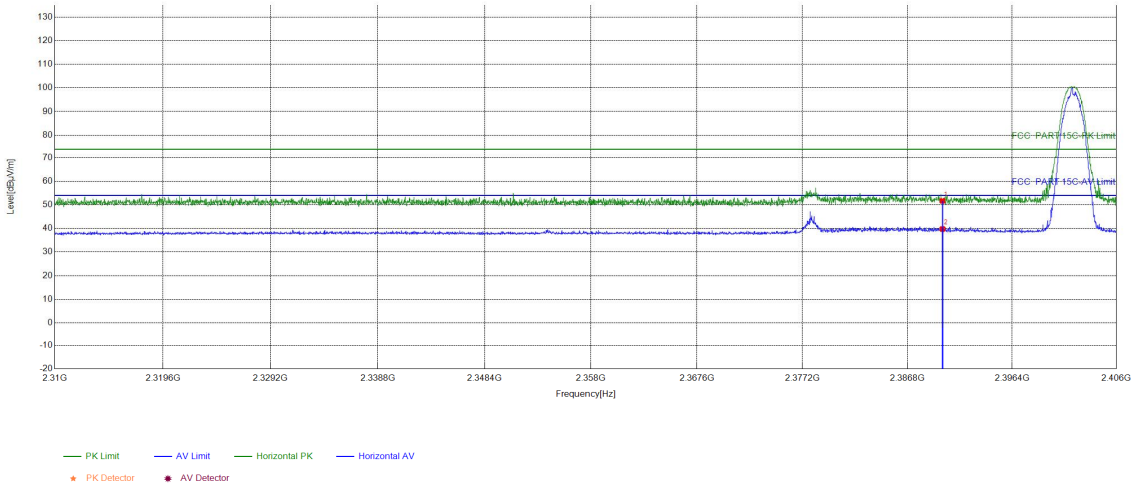

Suspected List									
NO	Freq. [MHz]	Factor [dB]	Reading [dBμV]	Level [dBμV/m]	Limit [dBμV/m]	Margin [dB]	Result	Polarity	Remark
1	2390	15.96	35.74	51.70	74.00	22.30	PASS	Horizontal	PK
2	2390	15.96	23.80	39.76	54.00	14.24	PASS	Horizontal	AV

Test_Mode	π/4DQPSK Transmitting	Test_Frequency	2402Mhz
Ant	/	Test_Date	2026/2/3

Test Graph

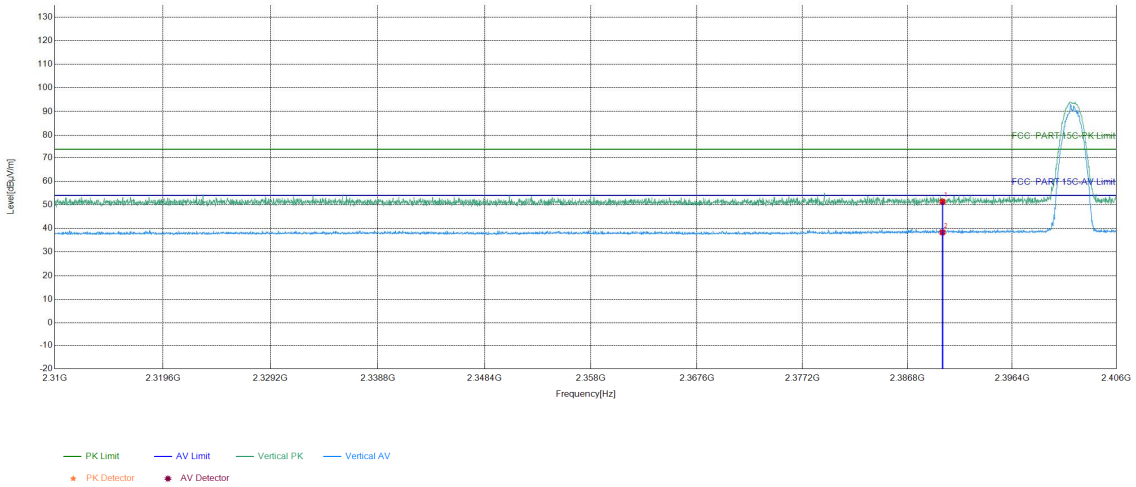

Suspected List									
NO	Freq. [MHz]	Factor [dB]	Reading [dBμV]	Level [dBμV/m]	Limit [dBμV/m]	Margin [dB]	Result	Polarity	Remark
1	2390	15.96	35.41	51.37	74.00	22.63	PASS	Vertical	PK
2	2390	15.96	22.38	38.34	54.00	15.66	PASS	Vertical	AV

Test_Mode	π/4DQPSK Transmitting	Test_Frequency	2480Mhz
Ant	/	Test_Date	2026/2/3

Test Graph

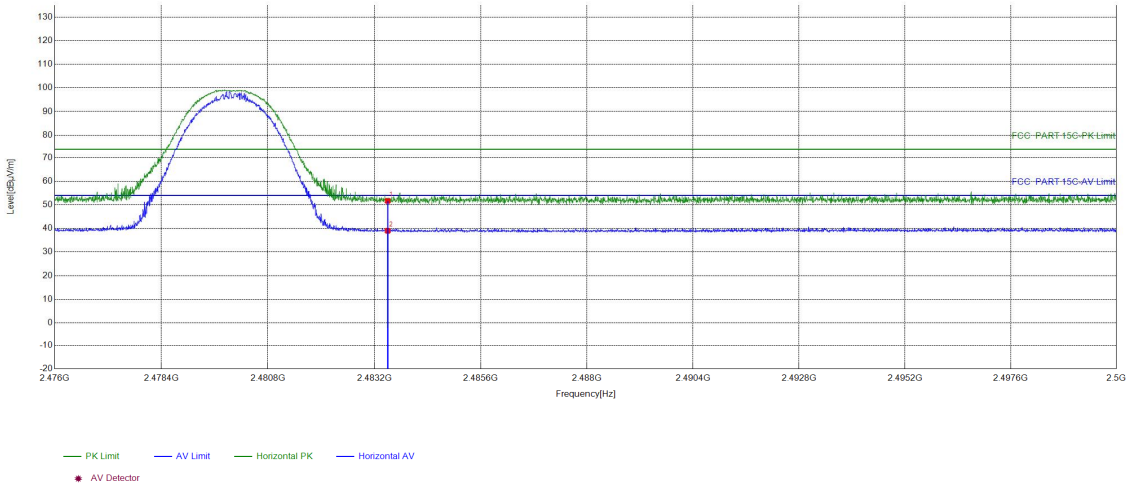

Suspected List									
NO	Freq. [MHz]	Factor [dB]	Reading [dBμV]	Level [dBμV/m]	Limit [dBμV/m]	Margin [dB]	Result	Polarity	Remark
1	2483.5	16.29	35.40	51.69	74.00	22.31	PASS	Horizontal	PK
2	2483.5	16.29	22.72	39.01	54.00	14.99	PASS	Horizontal	AV

Test_Mode	π/4DQPSK Transmitting	Test_Frequency	2480Mhz
Ant	/	Test_Date	2026/2/3

Test Graph

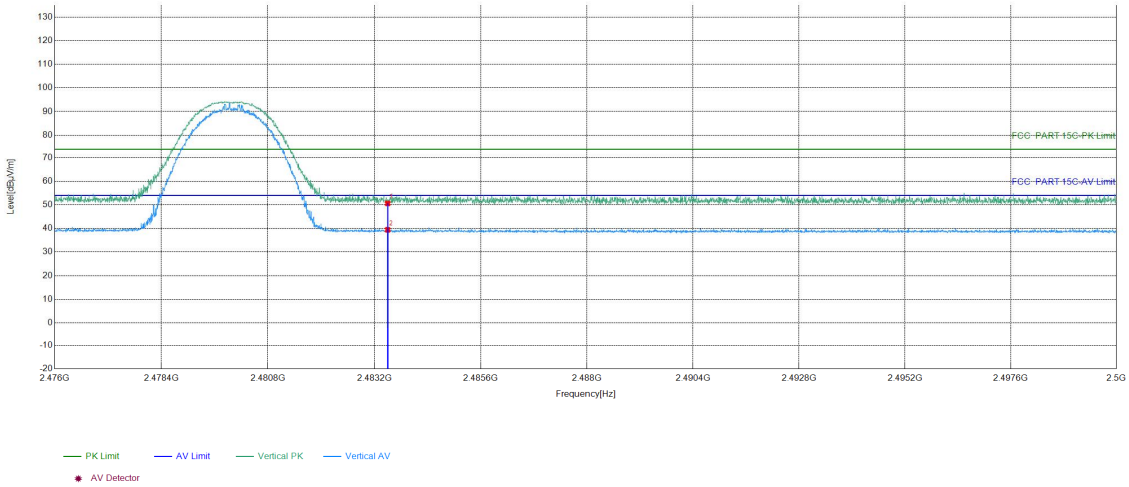

Suspected List									
NO	Freq. [MHz]	Factor [dB]	Reading [dBμV]	Level [dBμV/m]	Limit [dBμV/m]	Margin [dB]	Result	Polarity	Remark
1	2483.5	16.29	34.35	50.64	74.00	23.36	PASS	Vertical	PK
2	2483.5	16.29	23.15	39.44	54.00	14.56	PASS	Vertical	AV

Test_Mode	8DPSK Transmitting	Test_Frequency	2402Mhz
Ant	/	Test_Date	2026/2/3

Test Graph

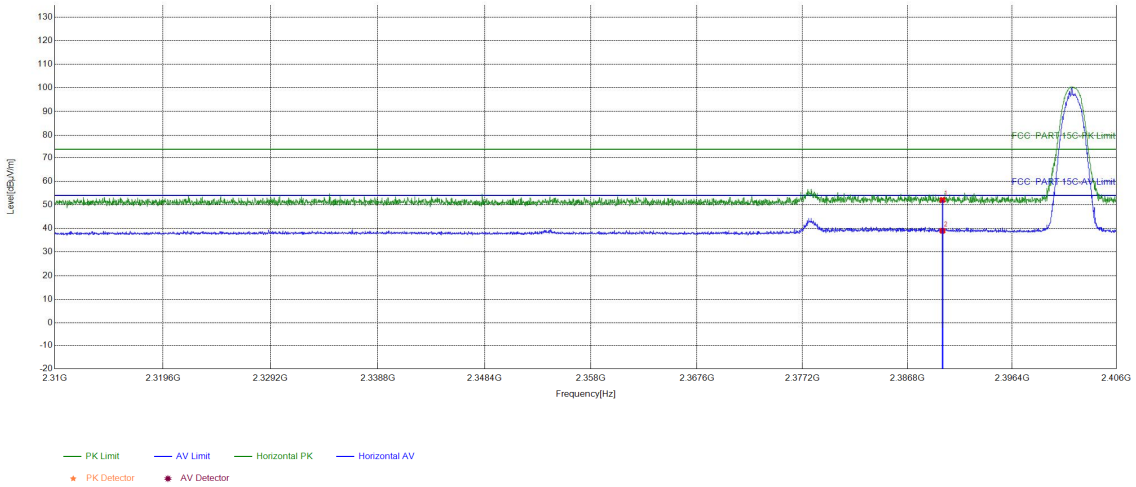

Suspected List									
NO	Freq. [MHz]	Factor [dB]	Reading [dBμV]	Level [dBμV/m]	Limit [dBμV/m]	Margin [dB]	Result	Polarity	Remark
1	2390	15.96	36.12	52.08	74.00	21.92	PASS	Horizontal	PK
2	2390	15.96	23.07	39.03	54.00	14.97	PASS	Horizontal	AV

Test_Mode	8DPSK Transmitting	Test_Frequency	2402Mhz
Ant	/	Test_Date	2026/2/3

Test Graph

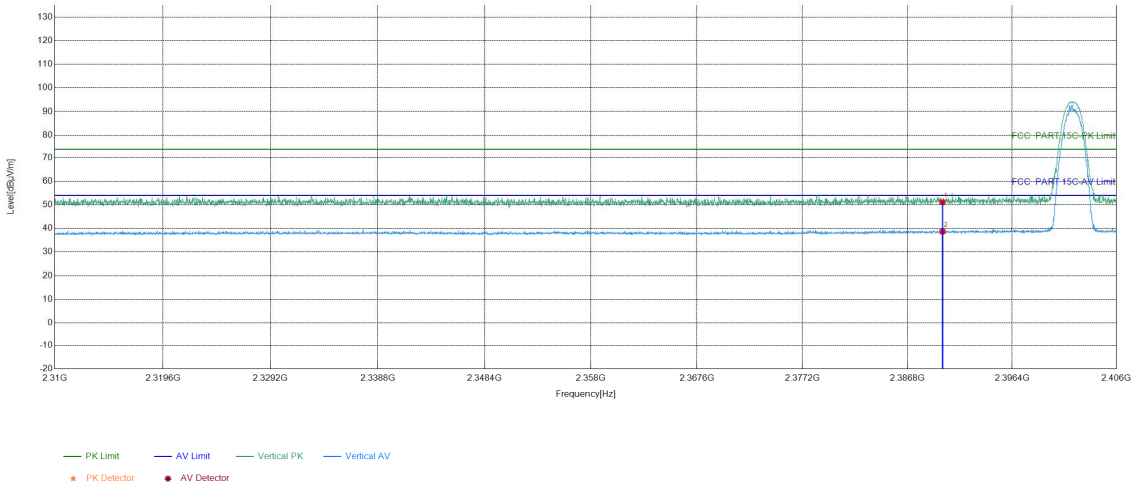

Suspected List									
NO	Freq. [MHz]	Factor [dB]	Reading [dBμV]	Level [dBμV/m]	Limit [dBμV/m]	Margin [dB]	Result	Polarity	Remark
1	2390	15.96	35.19	51.15	74.00	22.85	PASS	Vertical	PK
2	2390	15.96	22.73	38.69	54.00	15.31	PASS	Vertical	AV

Test_Mode	8DPSK Transmitting	Test_Frequency	2480Mhz
Ant	/	Test_Date	2026/2/3

Test Graph

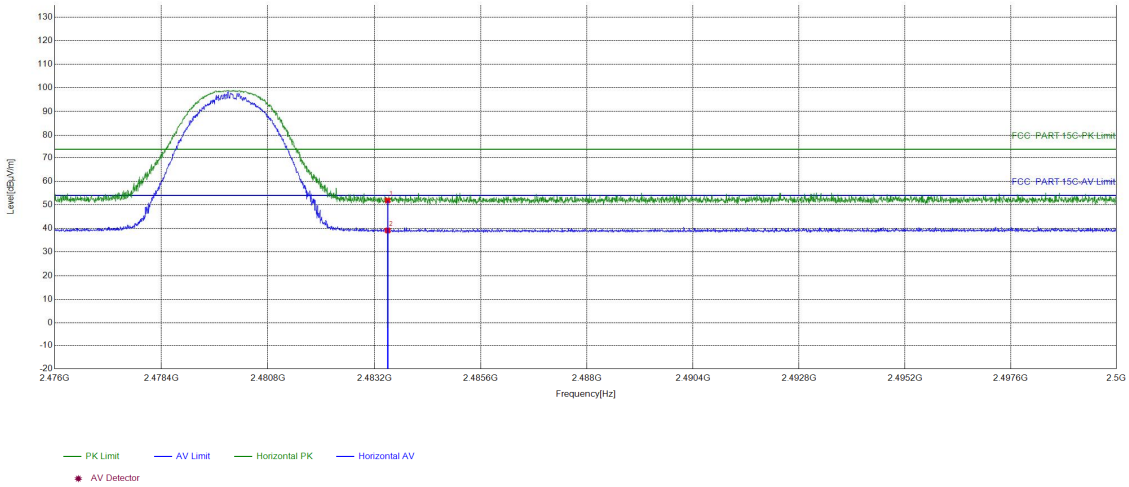

Suspected List									
NO	Freq. [MHz]	Factor [dB]	Reading [dBμV]	Level [dBμV/m]	Limit [dBμV/m]	Margin [dB]	Result	Polarity	Remark
1	2483.5	16.29	35.60	51.89	74.00	22.11	PASS	Horizontal	PK
2	2483.5	16.29	22.87	39.16	54.00	14.84	PASS	Horizontal	AV

Test_Mode	8DPSK Transmitting	Test_Frequency	2480Mhz
Ant	/	Test_Date	2026/2/3

Test Graph

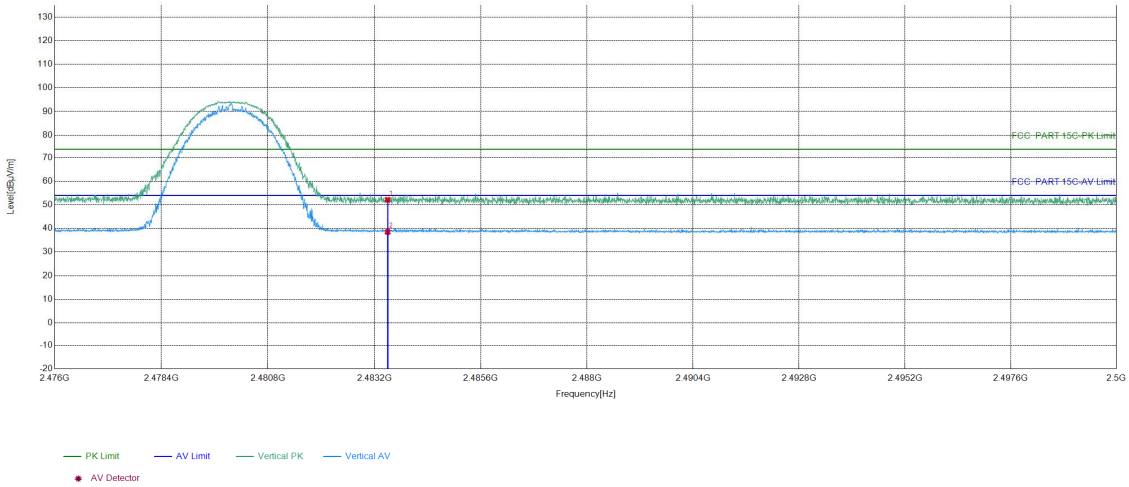

Suspected List									
NO	Freq. [MHz]	Factor [dB]	Reading [dBμV]	Level [dBμV/m]	Limit [dBμV/m]	Margin [dB]	Result	Polarity	Remark
1	2483.5	16.29	35.88	52.17	74.00	21.83	PASS	Vertical	PK
2	2483.5	16.29	22.25	38.54	54.00	15.46	PASS	Vertical	AV

Note:
The field strength is calculated by adding the Antenna Factor, Cable Factor & Preamplifier. The basic equation with a sample calculation is as follows:
Final Test Level =Receiver Reading - Correct Factor
Correct Factor = Preamplifier Factor– Antenna Factor–Cable Factor

5 Appendix A

Refer to Appendix: Bluetooth Classic of EED32S80229502.

6 PHOTOGRAPHS

Refer to Appendix Photographs of Report No. EED32S80229501.

Statement

1. This report is considered invalid without approved signature, special seal and the seal on the perforation;

2. The Company Name shown on Report and Address, the sample(s) and sample information was/were provided by the applicant who should be responsible for the authenticity which CTI hasn't verified;

3. The result(s) shown in this report refer(s) only to the sample(s) tested;

4. Unless otherwise stated,the decision rule for conformity reporting is based on Binary Statement for Simple Acceptance Rule stated in ILAC-G8:09/2019/CNAS-GL015:2022;

5. Without written approval of CTI, this report can't be reproduced except in full;

*** End of Report ***