TRASNA

LARA-R6 series

LTE Cat 1 modules data sheet

A product born from ublox

Table of contents

Abstract 4

Document information 4

1. Functional description 6
1.1. Overview 6
1.2. Block diagram 8
1.3. Product description 8
1.4. AT command support 10
1.5. Supported features 10

2. Interfaces 13
2.1. Power management 13
2.1.1. Module supply input (VCC) 13
2.1.2. Generic digital interfaces supply output (V_INT) 13
2.2. Antenna interfaces 13
2.2.1. Antenna RF interfaces 13
2.2.2. Antenna detection 13
2.3. System functions 14
2.3.1. Module power-on 14
2.3.2. Module power-off 14
2.3.3. Module reset 15
2.4. SIM interface 15
2.4.1. SIM card / chip interface 15
2.4.2. SIM card detection 15
2.5. Serial communication 16
2.5.1. UART interfaces 16
2.5.1.1. Main UART interface 16
2.5.1.2. Auxiliary UART interface 16
2.5.1.3. Multiplexer protocol 17
2.5.2. USB interface 17
2.5.3. I2C interface 17
2.6. Audio interface 18
2.7. Clock output 18
2.8. GPIO pins 18
2.9. Antenna dynamic tuner interface 19
2.10. Reserved pins 20

3. Pin definition 21
3.1. Pin assignment 21

4. Electrical specifications 25
4.1. Absolute maximum rating 25
4.1.1. Maximum ESD 25
4.2. Operating conditions 26

4.2.1. Operating temperature range 26
4.2.2. Thermal parameters 26
4.2.3. Supply/power pins 26
4.2.4. Current consumption 27
4.2.5. LTE RF characteristics 28
4.2.6. 3G RF characteristics 30
4.2.7. 2G RF characteristics 31
4.2.8. ANT_DET pin 31
4.2.9. PWR_ON pin 31
4.2.10. RESET_N pin 32
4.2.11. SIM pins 32
4.2.12. USB pins 32
4.2.13. I2C pins 33
4.2.14. Generic Digital Interfaces pins 33
4.2.14.1. AC characteristics of clock output pin (GPIO6) 33
4.2.14.2. AC characteristics of I2S pins 33
4.2.15. Smart temperature supervisor 34
4.3. Parameters for ATEX applications 34

5. Mechanical specifications 36

6. Qualification and approvals 37
6.1. Reliability tests 37
6.2. Approvals 37

7. Product handling & soldering 38
7.1. Packaging 38
7.1.1. Reels 38
7.1.2. Tapes 38
7.2. Moisture sensitivity levels 39
7.3. Reflow soldering 39
7.4. ESD precautions 39

8. Labeling and ordering information 40
8.1. Product labeling 40
8.2. Explanation of codes 40
8.3. Ordering information 41

Appendix 42

A Glossary 42

Related documentation 44

Revision history 44

Contact details 45

Abstract

The LARA-R6 cellular module features uncompromised global connectivity in a very small form factor. With global, multi-regional and regional variants, customers have great flexibility and can simplify their logistics. The feature-rich LARA-R6 module is secure by design and has a comprehensive certification scheme, versatile interfaces, and multi-band and multi-mode capabilities, all which make LARA-R6 ideal for use in any region and in wide range of applications.

Document information

Title	LARA-R6 series
Subtitle	LTE Cat 1 modules
Document type	data sheet
Document number	TRSC-21004391
Revision and date	R19, 28 October 2025
Disclosure restriction	Public

Product status	**Corresponding content status**	
Functional sample	Draft	For functional testing. Revised and supplementary data will be published later.
In development / Prototype	Objective specification	Target values. Revised and supplementary data will be published later.
Engineering sample	Advance information	Data based on early testing. Revised and supplementary data will be published later.
Initial production	Early production information	Data from product verification. Revised and supplementary data may be published later.
Mass production / End of life	Production information	Document contains the final product specification.

This document applies to the following products:

Product name	Type number	Firmware version	Product status
LARA-R6001	LARA-R6001-00B-00	02.14,A00.01	End of Life
	LARA-R6001-00B-01	02.14,A00.01	End of Life
	LARA-R6001-01B-00	04.22,A00.01	Mass production
LARA-R6001D	LARA-R6001D-00B-00	00.13,A00.01	End of Life
	LARA-R6001D-00B-01	00.13,A00.01	End of Life
	LARA-R6001D-01B-00	04.22,A00.01	Mass production
LARA-R6401	LARA-R6401-00B-00	02.14,A00.01	End of Life
	LARA-R6401-00B-01	02.14,A00.01	End of Life
	LARA-R6401-01B-00	04.22,A00.01	Mass production
LARA-R6401D	LARA-R6401D-00B-00	01.14,A00.01	End of Life
	LARA-R6401D-00B-01	01.14,A00.01	End of Life
	LARA-R6401D-01B-00	04.22,A00.01	Mass production
LARA-R6801	LARA-R6801-00B-00	02.14,A00.01	End of Life
	LARA-R6801-00B-01	02.14,A00.01	End of Life
	LARA-R6801-01B-00	04.22,A00.01	Mass production
LARA-R6801D	LARA-R6801D-01B-00	04.22,A00.01	Mass production

Confidentiality

This document is provided for informational purposes only and is subject to change without notice. Trasna and third parties may hold intellectual property rights in the products, names, logos, or designs referenced herein. No part of this document may be copied, reproduced, modified, or disclosed to third parties without prior written permission. The information is provided “as is” without warranties of any kind, express or implied, including but not limited to accuracy, reliability, or suitability. For full terms, please visit trasna.io/terms

1. Functional description

1.1. Overview

The LARA-R6 series comprises multi-band and multi-mode modules supporting LTE Cat 1 FDD and LTE Cat 1 TDD radio access technology (RAT), with 3G UMTS/HSPA and 2G GSM/GPRS/EGPRS fallback, providing the ideal solution for global and multi-regional coverage in the small LARA LGA form-factor (26.0 x 24.0 mm, 100-pin), which is easy to integrate in compact designs.

The LARA-R6 series comprises six variants:

- LARA-R6001 (data and voice) and LARA-R6001D (data-only) modules are the smallest LTE Cat 1 multi-mode solutions with comprehensive support of RAT and bands for global connectivity, including 18 LTE FDD/TDD bands plus 3G/2G fallback in single SKU.
- LARA-R6401 (data and voice) and LARA-R6401D (data-only) modules offer an ideal LTE Cat 1 solution for North America, supporting all relevant LTE bands for use on AT&T, FirstNet, Verizon, or T-Mobile mobile networks in single SKU for the North American market
- LARA-R6801 (data and voice) and LARA-R6801D (data-only) modules are solutions designed for multi-regional deployments, supporting all relevant LTE bands plus 3G/2G fallback for use in EMEA, APAC, Japan and Latin America regions.

With the six variants of LARA-R6 series modules customers have great flexibility, can maximize reusing their development efforts, and can simplify logistics. Customers can take advantage of embedded IoT protocols (LwM2M, MQTT) and security features (TLS/DTLS, secure update/secure boot) to implement various applications, such as device management, remote device actions, and secure FOTA updates.

Versatile interfaces, features, multi-band and multi-mode capabilities make the LARA-R6 series modules ideally suitable for a wide range of applications, such as asset tracking, telematics, remote monitoring, alarm panels, video surveillance, connected health, point of sales terminals, and mobile cameras. Generally, the modules are suited to applications that require medium speed data, seamless connectivity, superior coverage, low latency, streaming services (data or voice), and to industrial applications focused on product life-cycle longevity.

Table 1 summarizes the main features of LARA-R6 series modules.

☞ The LARA-R6001D, LARA-R6401D and LARA-R6801D data-only modules have the same electrical characteristics, feature set, and functionalities of the LARA-R6001, LARA-R6401 and LARA-R6801 data and voice modules respectively, except for the support of voice / audio.

☞ LARA-R6 series modules may be equivalently identified as Lara-R6 series modules for marketing purposes.

Table 1: LARA-R6 series main features summary

	LARA-R6001	LARA-R6001D	LARA-R6401	LARA-R6401D	LARA-R6801	LARA-R6801D
Region						
	Global	Global	North America	North America	Multi-Region	Multi-Region
Radio Access Technology						
LTE category	LTE Cat 1	LTE Cat 1	LTE Cat 1	LTE Cat 1	LTE Cat 1	LTE Cat 1
LTE FDD bands	1,2,3,4,5,7,8 12,13,18,19 20,26,28	1,2,3,4,5,7,8 12,13,18,19 20,26,28	2,4,5 12,13,14 66,71	2,4,5 12,13,14 66,71	1,2,3,4,5,7,8 18,19 20,26,28	1,2,3,4,5,7,8 18,19 20,26,28
LTE TDD bands	38,39,40,41	38,39,40,41				
3G bands	1,2,5,8	1,2,5,8			1,2,5,8	1,2,5,8
2G bands	Quad	Quad			Quad	Quad
Positioning						
Internal GNSS receiver						
External GNSS control	●	●	●	●	●	■
AssistNow software	●	●	●	●	●	■
CellLocate®	●	●	●	●	●	■
Interfaces						
UARTs	2	2	2	2	2	2
USB	1	1	1	1	1	1
I2C	1	1	1	1	1	1
SIM	1	1	1	1	1	1
GPIOs	9	9	9	9	9	9
Digital audio (I2S)	●		●		●	
Features						
Secure boot and updates	●	●	●	●	●	■
PSM	■	■	■	■	■	■
eDRX	●	●	●	●	●	■
TCP/IP, UDP/IP	●	●	●	●	●	■
HTTP, HTTPS	●	●	●	●	●	■
FTP, FTPS	●	●	●	●	●	■
TLS, DTLS	●	●	●	●	●	■
MQTT, MQTT-SN	●	●	●	●	●	■
Dual stack IPv4 / IPv6	●	●	●	●	●	■
LwM2M	●	●	●	●	●	■
FW update via serial	●	●	●	●	●	■
FW update Over the Air	●	●	●	●	●	■
Backup/Restore	●	●	●	●	●	■
Last gasp	●	●	●	●	●	■
Antenna dynamic tuning	■	■	●	●	■	■
Antenna detection	●	●	●	●	●	■
SIM detection	●	●	●	●	●	■
Jamming detection	●	●	●	●	●	■
Rx diversity	●	●	●	●	●	■
VoLTE/CSFB	●		●		●	
Grade						
Standard						
Professional	●	●	●	●	●	●
Automotive						
Note	● = Supported	■ = Supported by “01B” product version onwards				

1.2. Block diagram

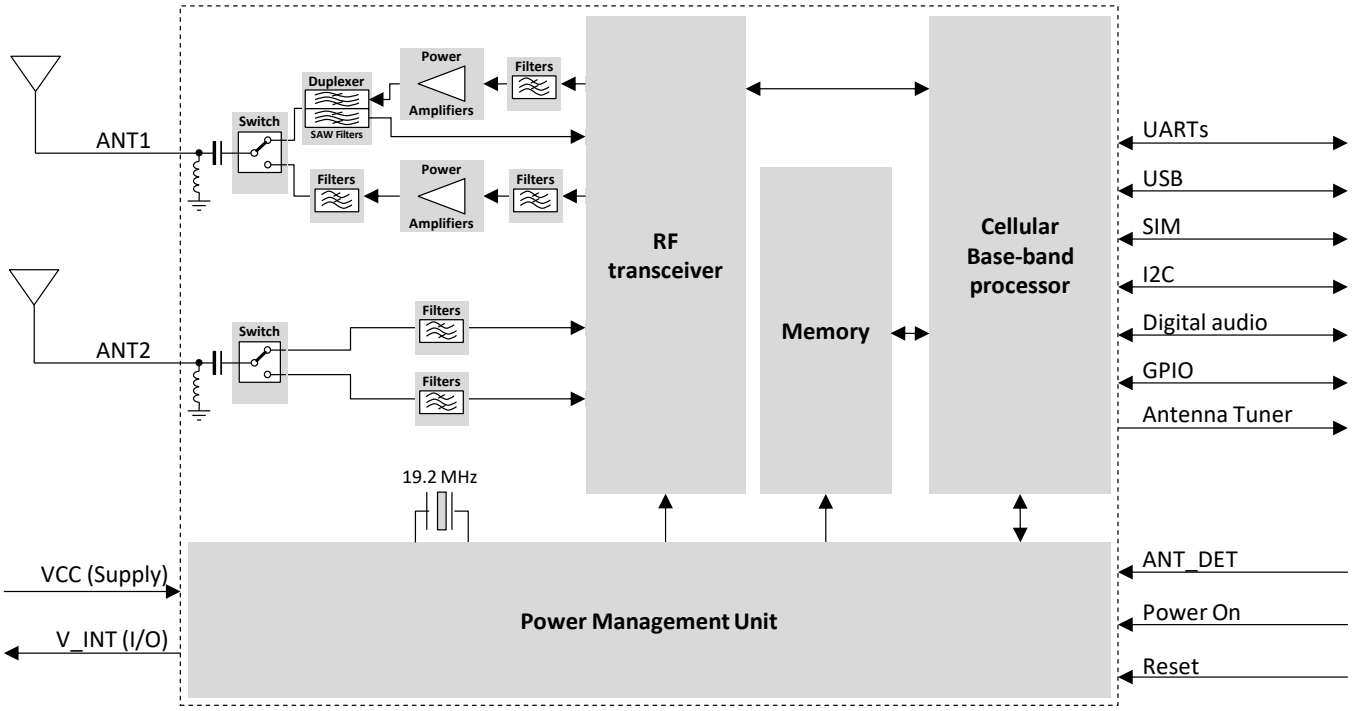

Figure 1: LARA-R6 series block diagram

☞ Digital audio interface is not supported by LARA-R6001D, LARA-R6401D and LARA-R6801D data-only modules.

☞ The antenna tuner interface is not supported by the LARA-R6001-00B, LARA-R6001D-00B and LARA-R6801-00B product versions. The corresponding pins are marked as reserved for future use (**RSVD**), they are intended to be left unconnected and they must not be driven by external devices.

1.3. Product description

LARA-R6 series modules include six variants providing flexibility to use the bands and the RAT available in specific region or with specific operators:

- LARA-R6001 / LARA-R6001D are the smallest LTE Cat 1 multi-mode modules for global coverage. Its single SKU for the world provides universal connectivity and simplifies logistics. This truly global module with comprehensive band support has 18 LTE bands plus 3G/2G fallback.
- LARA-R6401 / LARA-R6401D modules offer an ideal LTE Cat 1 solution for North America, supporting all relevant LTE bands. They are designed for use on AT&T, FirstNet, Verizon, or T-Mobile. Managing a single SKU for the North American market simplifies logistics and reduces related costs.
- LARA-R6801 / LARA-R6801D modules are a multi-regional variant specifically designed for use in EMEA, APAC, Japan and Latin America regions. They support all relevant LTE Cat 1 bands plus 3G/2G fallback.

Except for the LARA-R6001D, LARA-R6401D and LARA-R6801D data-only product versions, the LARA-R6 series modules provide Voice over LTE (VoLTE) and Circuit-switched fallback (CSFB) audio capability according to the supported RAT. The 911 and E911 services are not supported.

Table 2: LARA-R6 series supported LTE, 3G and 2G bands summary

Module	Region	LTE FDD bands[1]	LTE TDD bands[1]	WCDMA bands	GSM bands
LARA-R6001, LARA-R6001D	Global	12 (700 MHz) 28 (700 MHz) 13 (700 MHz) 20 (800 MHz) 18 (850 MHz) 19 (850 MHz) 26 (850 MHz) 5 (850 MHz) 8 (900 MHz) 4 (1700 MHz) 3 (1800 MHz) 2 (1900 MHz) 1 (2100 MHz) 7 (2600 MHz)	39 (1900 MHz) 40 (2300 MHz) 41 (2600 MHz) 38 (2600 MHz)	5 (850 MHz) 8 (900 MHz) 2 (1900 MHz) 1 (2100 MHz)	GSM 850 E-GSM 900 DCS 1800 PCS 1900
LARA-R6401, LARA-R6401D	North America	71 (600 MHz) 12 (700 MHz) 13 (700 MHz) 14 (700 MHz) 5 (850 MHz) 4 (1700 MHz) 66 (1700 MHz) 2 (1900 MHz)			
LARA-R6801, LARA-R6801D	Europe, Middle East, Africa, Asia-Pacific, Japan, Latin America	28 (700 MHz) 20 (800 MHz) 18 (850 MHz) 19 (850 MHz) 26 (850 MHz) 5 (850 MHz) 8 (900 MHz) 4 (1700 MHz) 3 (1800 MHz) 2 (1900 MHz) 1 (2100 MHz) 7 (2600 MHz)		5 (850 MHz) 8 (900 MHz) 2 (1900 MHz) 1 (2100 MHz)	GSM 850 E-GSM 900 DCS 1800 PCS 1900

Table 3: LARA-R6 series LTE, 3G and 2G characteristics summary

4G LTE	3G UMTS/HSDPA/HSUPA	2G GSM/GPRS/EDGE
3GPP Release 10 Long Term Evolution (LTE) Evolved UTRA (E-UTRA) Frequency/Time Division Duplex (FDD/TDD) DL Rx diversity	3GPP Release 8 High Speed Packet Access (HSPA) UMTS Terrestrial Radio Access (UTRA) Frequency Division Duplex (FDD) DL Rx Diversity	3GPP Release 9 Enhanced Data rate GSM Evolution (EDGE) GSM EGPRS Radio Access (GERA) Time Division Multiple Access (TDMA) DL Advanced Rx Performance Phase 1
LTE Power Class Class 3 (23 dBm)	UMTS/HSDPA/HSUPA Power Class Class 3 (24 dBm)	GSM/GPRS (GMSK) Power Class Class 4 (33 dBm) for 850/900 band Class 1 (30 dBm) for 1800/1900 band EDGE (8-PSK) Power Class Class E2 (27 dBm) for 850/900 band Class E2 (26 dBm) for 1800/1900 band
Data rate LTE category 1: up to 10.3 Mbit/s DL, up to 5.2 Mbit/s UL	Data rate HSDPA category 8: up to 7.2 Mbit/s DL HSUPA category 6: up to 5.76 Mbit/s UL	Data rate GPRS multi-slot class 33[2], CS1-CS4, up to 107 kbit/s DL, 85.6 kbit/s UL EDGE multi-slot class 33[2], MCS1-MCS9, up to 296 kbit/s DL, 236.8 kbit/s UL

[1] LARA-R6 modules support all E-UTRA channel bandwidths for each operating band according to 3GPP TS 36.521-1 [10]
[2] GPRS/EDGE multislot class 33 implies a maximum of 5 slots in DL (reception), 4 slots in UL (transmission) with 6 slots in total.

1.4. AT command support

The LARA-R6 series modules support AT commands according to 3GPP standards TS 27.007 [7], TS 27.005 [8] and the proprietary AT command extension.

☞ For a complete list of supported AT commands, see the AT commands manual [1].

RIL (Radio Interface Layer) software for Android is available free of charge; see the Android RIL source code application note [3] for the supported software deliveries and more information.

1.5. Supported features

Table 4 lists some of the main features supported by LARA-R6 series modules. For more details, see the AT commands manual [1] and the application development guide [5].

Table 4: Main features supported by LARA-R6 series modules

Feature	Description
Device security	Hardware-based security functions of the chipset are used to provide: • Secure boot: keep software authenticity and integrity • Secure update: supervise the secure delivery of the correct FW to the module • Secure production: secret keys are programmed into the module using encrypted protocols and within secured manufacturing environment
Firmware update Over The Air (uFOTA)	Module firmware update over the air interface using proprietary LwM2M client/server solution.
Firmware update Over AT commands (FOAT)	Module firmware update over AT command interfaces.
VoLTE and CSFB audio capability [3]	Voice over LTE (VoLTE) feature allows voice service over LTE bearer, via embedded IP Multimedia Subsystem (IMS). Circuit-switched fallback (CSFB) feature allows voice service over circuit switched infrastructure (3G or 2G radio access technologies, which are not supported by LARA-R6401 modules).
LTE / 3G Rx Diversity	Improved cellular link quality and reliability on all operating bands, by means of 2 receiving antenna.
Network indication	GPIO configured to indicate the network status: registered home network, registered roaming, voice or data call enabled, or no service. The feature can be enabled by the +UGPIOC AT command.
Antenna detection	The **ANT_DET** pin provides antenna presence detection capability, as optional features, evaluating the resistance from **ANT1** and **ANT2** pins to GND by means of an external antenna detection circuit implemented on the application board.
Antenna dynamic tuning [4]	Control of an external antenna matching IC via two GPIOs changing dynamically the high/low state in real time according to the cellular band used by the module.
Jamming detection	Detects “artificial” interference that obscures the operator’s carriers entitled to give access to the radio service and reports the start and stop of such conditions to the application processor that can react accordingly.
Embedded TCP and UDP stack	Embedded TCP/IP and UDP/IP stack including direct link mode for TCP and UDP sockets. Sockets can be set in Direct Link mode to establish a transparent end to end communication with an already connected TCP or UDP socket via serial interface.
Embedded FTP, FTPS	File Transfer Protocol as well as Secure File Transfer Protocol (SSL encryption of FTP control channel) functionalities are supported by means of AT commands.
Embedded HTTP, HTTPS	Hyper-Text Transfer Protocol as well as Secure Hyper-Text Transfer Protocol (SSL encryption) functionalities are supported via AT commands.
CoAP (RFC 7252)	Embedded Constrained Application Protocol (CoAP) datagram-based client/server application protocol designed to easily translate from HTTP for simplified integration with the web.

[3] Not supported by LARA-R6001D, LARA-R6401D and LARA-R6801D data-only modules
[4] Not supported by LARA-R6001-00B, LARA-R6001D-00B and LARA-R6801-00B modules

Feature	Description
MQTT (v3.1.1) and MQTT-SN (v1.2)	Embedded Message Queuing Telemetry Transport (MQTT) and MQTT for Sensor Networks (MQTT-SN) publish-subscribe messaging protocols designed for lightweight M2M communications over TCP (MQTT) or over UDP (MQTT-SN). These allow one-to-one, one-to-many and many-to-one communications over a TCP or UDP connection.
LwM2M	The LwM2M is a light and compact communication protocol designed for managing IoT machine-to-machine communication between a LwM2M server and a LwM2M client located in lightweight, low power, or resource-constrained LwM2M devices, with object data model.
TLS (v1.0, v1.1, v1.2, v1.3) and DTLS (v1.2)	Transport Layer Security (TLS) provides security for HTTP, FTP, MQTT, and TCP communications. Embedded Datagram Transport Layer Security (DTLS) provides security for LwM2M, and UDP communications.
DNS	Support for DNS functionality.
IPv4/IPv6 dual-stack	Capability to move between IPv4 and dual stack network infrastructures. IPv4 and IPv6 addresses can be used.
PPP	IPv4/IPv6 packets relaying through the cellular protocol stack performed on a Point-to-Point Protocol (PPP) connection established with the external application via a serial interface. Transitions between Online command mode (OLCM) and PPP mode are supported.
Multiple PDP contexts	Multiple PDP contexts can be activated, and multi secondary PDP contexts be associated to a primary PDP context.
ODIS	Open mobile alliance device management IMEI Sync (ODIS) is an AT&T functionality required at the cellular module level and used to identify the end device operating inside the network.
BIP	Bearer Independent Protocol (BIP) for Over-the-Air SIM provisioning. The data transfer to/from the SIM uses either an already active PDP context or a new PDP context established with the APN provided by the SIM card.
External GNSS receiver control via modem	Control and communication with external u-blox positioning chips and modules is available by I2C interface. This means that from any host processor, a single serial port can control the cellular module and the positioning chip or module. For more details, see the positioning application note [1].
Embedded AssistNow software	Embedded AssistNow Online and AssistNow Offline clients are available to provide better performance and faster Time-to-First-Fix for external u-blox GNSS receiver connected to the cellular module via I2C interface. An AT command can enable / disable the clients.
CellLocate®	Enables the estimation of device position based on the parameters of the mobile network cells visible to the specific device based on the CellLocate® database A set of AT commands allows CellLocate® service configuration and position request. ☞ We are extremely mindful of user privacy. When a position is sent to the CellLocate® server, we are unable to track the SIM used or the specific device.
Hybrid positioning	The current position is provided by an external u-blox GNSS receiver connected to the cellular module via I2C interface, or the estimated position from CellLocate®, depending on which method provides the best and fastest solution according to the user configuration. A set of AT commands allows Hybrid positioning service configuration and position request.
Smart Temperature Supervisor	Constant monitoring of the module board temperature: Warning notification when the temperature approaches an upper or lower predefined threshold Shutdown notified and forced when the temperature value is outside the specified range (shutdown suspended in case of an emergency call in progress) The optional Smart Temperature Supervisor feature is by default disabled, and it can be enabled and configured through the +USTS AT command. ☞ The sensor measures the board temperature, which can differ from ambient temperature.
Last gasp	In case of power supply outage the cellular module can be configured through the +ULGASP AT command to send an alarm notification to a remote entity.
Low power idle mode	The power saving configuration is disabled by default, but it can be enabled and configured using the +UPSV AT command. When the power saving is enabled, the module automatically enters the low power idle mode whenever possible, reducing current consumption.
Fast Dormancy	The Fast Dormancy feature, based on 3GPP specifications, allows reduction of current consumption and network utilization during periods of data inactivity.

Feature	Description
3GPP Power Saving Mode (PSM)[5]	The Power Saving Mode (PSM) feature, based on 3GPP specifications, allows further reduction of the module current consumption maximizing the amount of time a device can remain in the PSM ultra-low power deep-sleep mode during periods of data inactivity.
LTE eDRX	Extended idle mode Discontinuous Reception (eDRX) feature, based on 3GPP specifications, reduces the amount of signaling overhead decreasing the frequency of scheduled measurements and/or transmissions performed by the module in idle mode. This in turn leads to a reduction in the module power consumption while maintaining a perpetual connection with the base station.
LTE cDRX	Both the Long DRX Cycle and the Short DRX cycle are supported for LTE Connected Discontinuous Reception, allowing reduction of current consumption and LTE network utilization during periods of data inactivity.
Backup and restore	This feature allows the modules to autonomously restore the flash file system using the last backup stored on the module itself. For further details about the backup and restore feature, see the +UBKUPDATA AT command description in the AT commands manual [1], and the related section in the application development guide [5].

[5] Not supported by the LARA-R6001-00B, LARA-R6001D-00B, LARA-R6401-00B, LARA-R6401D-00B and LARA-R6801-00B product versions

2. Interfaces

2.1. Power management

2.1.1. Module supply input (VCC)

LARA-R6 series modules must be supplied through the three **VCC** pins by a DC power supply. Voltage must be stable, because during operation the current drawn from **VCC** can vary by some order of magnitude, especially due to the surging consumption profile of the GSM system (described in the system integration manual [2]). It is important that the system power supply circuit can support peak power.

LARA-R6 series modules provide separate supply inputs over the three **VCC** pins:

- **VCC** pins #52 and #53 represent the supply input for the internal RF power amplifiers, demanding most of the total current drawn by the module when RF transmission is enabled
- **VCC** pin #51 represents the supply input for the internal baseband Power Management Unit and the internal transceiver, demanding a minor part of the total current drawn by the module when RF transmission is enabled

2.1.2. Generic digital interfaces supply output (V_INT)

LARA-R6 series modules provide a 1.8 V supply rail output on the **V_INT** pin, which is internally generated when the module is switched on, and outside PSM deep-sleep mode[6]. The same voltage domain is used internally to supply the generic digital interfaces of the modules (as UARTs, I2C, I2S, GPIOs). The **V_INT** supply output can be used in place of external discrete regulator.

☞ It is recommended to provide accessible test point directly connected to the **V_INT** input pin.

2.2. Antenna interfaces

2.2.1. Antenna RF interfaces

The modules have two RF pins with a characteristic impedance of 50 Ω. The primary antenna pin (**ANT1**) supports both Tx and Rx, providing the main antenna interface, while the secondary antenna pin (**ANT2**) supports Rx only for the LTE / 3G Rx diversity configuration.

2.2.2. Antenna detection

The **ANT_DET** pin is an Analog to Digital Converter (ADC) input with a current source provided by LARA-R6 series modules to sense the external antenna(s) presence (as an optional feature). It evaluates the resistance from **ANT1** and **ANT2** pins to GND by means of an external antenna detection circuit implemented on the application board. For more details, see the system integration manual [2] and the AT commands manual [1].

[6] Not supported by "00B" products version

2.3. System functions

2.3.1. Module power-on

When LARA-R6 series modules are not powered, they can be switched on as following:

- Applying a voltage at the **VCC** module supply input within the operating range (see Table 14), and then forcing a low level at the **PWR_ON** input pin, which is normally set high by an internal pull-up, for a valid time period (see section 4.2.9, module switch on).

When LARA-R6 series modules are in power-off mode (switched off, with a voltage at the **VCC** module supply input within the normal operating range reported in Table 14), they can be switched on by:

- Forcing a low level at the **PWR_ON** input pin, which is normally set high by an internal pull-up, for a valid time period (see section 4.2.9, module switch-on).
- RTC alarm, i.e. pre-programmed scheduled time by AT+CALA command.

When LARA-R6 series modules are in the ultra-low power PSM deep-sleep mode[7], with a valid voltage present at the **VCC** module supply input within the operating range reported in Table 14, they can be woken up as follows:

- Forcing a low level at the **PWR_ON** input pin, which is normally set high by an internal pull-up, for a valid time period (see section 4.2.9, module wake-up from PSM deep-sleep).

The **PWR_ON** line is intended to be driven by open drain, open collector, or contact switch.

☞ It is recommended to provide accessible test point directly connected to the **PWR_ON** input pin.

2.3.2. Module power-off

The graceful power-off procedure of the modules, with storage of current parameter settings in the module's internal non-volatile memory and a clean network detach, can be triggered by:

- AT+CPWROFF command (see the AT commands manual [1]), or
- Forcing a low pulse at the **PWR_ON** input pin, which is normally set high by an internal pull-up, for a valid time period (see section 4.2.9, module graceful switch-off). The **PWR_ON** line is intended to be driven by open drain, open collector or contact switch.

A faster emergency power-off procedure of the modules, with storage of current parameter settings, but without a clean network detach, can be triggered by:

- AT+CFUN=10 command (see the AT commands manual [1]), or
- Forcing a rising edge at the GPIO input pin configured with the faster power-off function (see section 2.8, faster power-off)

The fastest memory-safe emergency power-off procedure of the LARA-R6 series modules[7], inhibiting further operations in the non-volatile flash memory, without executing the storage of the current parameter settings, and without executing a clean network detach, can be triggered by:

- AT+CFUN=11 command (see the AT commands manual [1]), or

[7] Not supported by "00B" products version

- Forcing a rising edge at the GPIO input pin configured with the memory-safe power-off function (see section 2.8, memory-safe power-off)

An abrupt shutdown occurs on LARA-R6 series modules, without storage of the current parameter settings and without a clean network detach, when:

- The **VCC** supply voltage is removed, dropping below the under-voltage shutdown threshold, or
- Forcing a low level at the **RESET_N** input pin, which is normally set high by an internal pull-up, for a valid time period (see 4.2.10, module abrupt emergency switch-off). The **RESET_N** line is intended to be driven by open drain, open collector or contact switch.

An over-temperature or an under-temperature graceful shutdown occurs on LARA-R6 series modules when the temperature measured within the cellular module reaches the dangerous area, if the optional Smart Temperature Supervisor feature is enabled and configured by the dedicated AT command. For more details, see 4.2.15, and see the AT commands manual [1], +USTS AT command.

2.3.3. Module reset

LARA-R6 series modules can be reset (rebooted), with storage of the current parameter settings in the module's internal non-volatile memory and a clean network detach, by:

- AT+CFUN=16 command (see the AT commands manual [1] for description and other options), or
- Forcing a low level at the **RESET_N** input pin, which is normally set high by an internal pull-up, for a valid time period (see 4.2.10, module reset / reboot). The **RESET_N** line is intended to be driven by open drain, open collector or contact switch.

2.4. SIM interface

2.4.1. SIM card / chip interface

LARA-R6 series modules include an interface to connect an external SIM card / chip over the **VSIM**, **SIM_IO**, **SIM_CLK**, **SIM_RST** pins: the high-speed SIM/ME interface is implemented as well as the automatic detection of the required SIM supporting voltage.

Both 1.8 V and 3.0 V SIM types are supported (1.8 V and 3.0 V ME). Activation and deactivation with automatic voltage switch from 1.8 V to 3.0 V is implemented, according to ISO-IEC 7816-3 specs.

2.4.2. SIM card detection

LARA-R6 series modules provide the SIM detection function over the **GPIO5** pin to sense the SIM card physical presence (as an optional feature) when the pin of the module is properly connected to the mechanical switch of the SIM car holder (see the system integration manual [2]).

2.5. Serial communication

2.5.1. UART interfaces

2.5.1.1. Main UART interface

LARA-R6 series modules include a main primary Universal Asynchronous Receiver/Transmitter serial interface (UART) for communication with an application host processor, supporting AT commands, data communication, multiplexer protocol functionality including virtual channel for GNSS tunneling, and FW update by means of FOAT:

- 8-wire serial port with RS-232 functionality conforming to ITU-T V.24 recommendation [13], with CMOS compatible levels (0 V for low data bit / ON state, 1.8 V for high data bit / OFF state)
    - Data lines (**RXD** output, **TXD** input),
    - hardware flow control lines (**CTS** output, **RTS** input),
    - modem status and control lines (**DTR** input, **DSR** output, **DCD** output, **RI** output)[8]
- Hardware flow control (default factory-programmed setting), or none flow control are supported
- Power saving indication available on the hardware flow control output (**CTS** line): the line is driven to the OFF state when the module is not prepared to accept data by the UART interface
- Power saving control over the **DTR** input can be enabled via +UPSV AT command
- 115’200 bit/s (default), 230’400 bit/s, 460’800 bit/s, 921’600 bit/s, and 3 Mbit/s baud rates are supported
- The default factory-programmed frame format is 8N1 (8 data bits, no parity, 1 stop bit)
- The following frame formats are supported: 8N2, 8N1 (default value), 8E1, 8O1, 7E1 and 7O1.

The UART serial interfaces can be conveniently configured through dedicated AT commands: see the AT commands manual [1] (+IPR, +ICF, +IFC, &K, \Q, &S, &D, &C, +UPSV, +USIO, +UUARTCONF AT commands).

2.5.1.2. Auxiliary UART interface

LARA-R6 series modules include a secondary auxiliary Universal Asynchronous Receiver/Transmitter serial interface (UART AUX) for communication with an application host processor, supporting AT commands, data communication, and FW update by means of FOAT:

- 4-wire serial port with RS-232 functionality conforming to ITU-T V.24 recommendation [13], with CMOS compatible signal levels (0 V for low data bit / ON state, 1.8 V for high data bit / OFF state)
    - Data lines (**DCD** as data output, **DTR** as data input)
    - HW flow control lines (**RI** as flow control output, **DSR** as flow control input)
- Hardware flow control (default setting), or none flow control are supported
- UART power saving indication available on the hardware flow control output (**RI** line): the line is driven to the OFF state when the module is not prepared to accept data by the UART interface
- 115’200 bit/s (default), 230’400 bit/s, 460’800 bit/s, 921’600 bit/s, and 3 Mbit/s baud rates are supported
- The default frame format is 8N1 (8 data bits, no parity, 1 stop bit)

The UART serial interfaces can be conveniently configured through dedicated AT commands: see the AT commands manual [1] (+IPR, +ICF, +IFC, &K, \Q, &S, &D, &C, +UPSV, +USIO, +UUARTCONF AT commands).

[8] Alternatively, **DTR**, **DSR**, **DCD** and **RI** pins can be mutually exclusively configured as a secondary auxiliary UART interface

2.5.1.3. Multiplexer protocol

LARA-R6 series modules include multiplexer functionality as per 3GPP TS 27.010 [9] on the main primary UART physical interface only. The multiplexer functionality is a data link protocol which uses HDLC-like framing and operates between the module (DCE) and the application processor (DTE), allowing several simultaneous sessions over the physical link (main primary UART): the user can concurrently use AT interface on one MUX channel and data communication on another MUX channel.

The following virtual channels are available:

- Multiplexer control
- AT commands / data connection
- GNSS data tunneling

2.5.2. USB interface

LARA-R6 series modules include a USB High-Speed 2.0 compliant interface with a maximum 480 Mbit/s data rate according to the Universal Serial Bus specification revision 2.0 [14]. The module itself acts as a USB device and can be connected to any compatible USB host.

The USB interface is available for communication with a host application processor (AT commands, data communication, GNSS tunneling, FW update by means of the FOAT feature), for FW update by means of the proprietary EasyFlash tool and for diagnostics.

The **USB_D+** / **USB_D-** lines carry the USB data and signaling. The USB interface is automatically enabled by an external valid USB VBUS voltage applied on the **VUSB_DET** input pin of the module.

☞ The USB interface of the LARA-R6 series modules is enabled only if an external voltage detectable as High logic level (see Table 27 for the electrical characteristics) is present at the **VUSB_DET** input during the switch-on boot sequence of the module. This configuration can be changed by the +UUSBDET AT command on all LARA-R6 series modules versions except LARA-R6001D-00B.

The USB interface provides functions with various capabilities and purposes, such as:

- Virtual serial port over USB for AT commands and data communication
- Virtual serial port over USB for GNSS tunneling
- Virtual serial port over USB for Diagnostic log
- Ethernet-over-USB (not supported by “00B” products version)

The user can concurrently use AT command interface on one virtual serial port, and packet switched / circuit switched data communication on another virtual serial port over USB.

LARA-R6 series modules are compatible with the standard Linux/Android USB kernel drivers.

☞ It is highly recommended to provide access to the **VUSB_DET**, **USB_D+**, **USB_D-** pins for FW update and for diagnostic purpose, by means of test points directly connected to the pins.

2.5.3. I2C interface

LARA-R6 series modules include an I2C-bus compatible interface (**SDA** and **SCL** pins) available to communicate with an external u-blox GNSS chips / modules, and with external compatible I2C devices as for example an audio codec: LARA-R6 series module acts as an I2C host which can communicate with I2C local devices in accordance with the I2C bus specifications [15].

For more details regarding I2C interface usage and the integration with a u-blox GNSS receiver, see the LARA-R6 series system integration manual [2], positioning implementation application note [1], and the I2C and GNSS AT commands description in the AT commands manual [1].

2.6. Audio interface

☞ LARA-R6001D, LARA-R6401D, LARA-R6801D data-only modules do not support of voice / audio.

LARA-R6 series modules support Voice over LTE (VoLTE) as well as Circuit-switched fallback (CSFB) from LTE to 3G or 2G radio bearer for providing audio services.

LARA-R6 series modules include a 4-wire I2S digital audio interface (**I2S_TXD**, **I2S_RXD**, **I2S_CLK**, **I2S_WA**) that can be configured by AT commands to transfer digital audio data to/from an external device as an audio codec.

For more details regarding I2S digital audio interface possible configurations, usage and guideline for the integration with an external digital audio device as an audio codec, see the LARA-R6 series system integration manual [2] and the audio sections in the AT commands manual [1].

2.7. Clock output

☞ LARA-R6001D, LARA-R6401D, LARA-R6801D data-only modules do not support **GPIO6** clock output.

LARA-R6 series modules provide digital clock output functionality on the **GPIO6** pin. This is mainly designed to feed the clock input of an external audio codec, as the clock output is generated only when the audio is active. For more details, see the AT commands manual [1], +UMCLK AT command.

2.8. GPIO pins

LARA-R6 series modules include 9 pins (**GPIO1**-**GPIO5**, **I2S_TXD**, **I2S_RXD**, **I2S_CLK**, **I2S_WA**) that can be configured as General Purpose Input/Output or to provide custom functions as summarized in the Table 5 (for further details, see the GPIO section in the AT commands manual [1]).

Table 5: GPIO custom functions configuration

Function	Description	Default GPIO	Configurable GPIOs
Network status indication	Network status: registered home network, registered roaming, data transmission, no service	--	GPIO1, GPIO2, GPIO3, GPIO4, I2S_RXD[9], I2S_TXD[9], I2S_CLK[9], I2S_WA[9]
GNSS supply enable	Enable/disable the supply of u-blox GNSS receiver connected to the cellular module	GPIO2	GPIO1, GPIO2, GPIO3, GPIO4
GNSS data ready	Sense when u-blox GNSS receiver connected to the module is ready for sending data by the I2C	GPIO3	GPIO3
SIM card detection	External SIM card physical presence detection	GPIO5	GPIO5
SIM card hot insertion/removal	Enable / disable SIM interface upon detection of external SIM card physical insertion / removal	--	GPIO5
RI	Main UART Ring Indicator output function	--	All
DTR	Main UART DTR input line function	--	GPIO3, GPIO4

[9] Not supported by “00B” products version

Function	Description	Default GPIO	Configurable GPIOs
Last gasp	Input to trigger last gasp notification by applying a rising or falling edge according to AT+ULGASP setting	--	GPIO3
Faster power-off	Input with internal pull-down to trigger a faster emergency shutdown (as AT+CFUN=10) by applying a rising edge	--	GPIO3
Memory-safe power-off[9]	Input with internal pull-down to trigger the fastest memory-safe emergency shutdown (as AT+CFUN=11) by applying a rising edge	--	GPIO3
I2S digital audio interface[10]	I2S digital audio interface	I2S_RXD, I2S_TXD, I2S_CLK, I2S_WA	I2S_RXD, I2S_TXD, I2S_CLK, I2S_WA
General purpose input	Input to sense high or low digital level	--	All
General purpose output	Output to set the high or the low digital level	GPIO4	All
Pin disabled	Tri-state with an internal active pull-down enabled	GPIO1	All

2.9. Antenna dynamic tuner interface

☞ The antenna dynamic tuner interface is not supported by the LARA-R6001-00B, the LARA-R6001D-00B and the LARA-R6801-00B product versions.

LARA-R6 series modules include two 1.8 V digital output pins (**RFCTRL1** and **RFCTRL2**) that are configured to control in real time an external antenna tuning IC, as optional available feature, changing their output value dynamically according to the specific actual cellular band in use by the module. Table 6, Table 7 and Table 8 illustrate the default factory-programmed configuration, which can be changed by dedicated AT command on “01B” product versions.

Table 6: LARA-R6001 and LARA-R6001D antenna dynamic tuning truth table (factory-programmed configuration)

RFCTRL1	RFCTRL2	LTE frequency band in use	2G/3G frequency band in use
0	0	B1, B2, B3, B4, B5, B7, B8, B19, B38, B39, B40, B41	GSM 850, E-GSM 900, DCS 1800, PCS 1900, all 3G bands
0	1	B12, B13, B28	N/A
1	0	B18, B20, B26	N/A
1	1	N/A	N/A

Table 7: LARA-R6401 and LARA-R6401D antenna dynamic tuning truth table (factory-programmed configuration)

RFCTRL1	RFCTRL2	LTE frequency band in use	2G/3G frequency band in use
0	0	B2, B4, B5, B66	N/A
0	1	N/A	N/A
1	0	B12, B13, B14	N/A
1	1	B71	N/A

Table 8: LARA-R6801 and LARA-R6801D antenna dynamic tuning truth table (factory-programmed configuration)

RFCTRL1	RFCTRL2	LTE frequency band in use	2G/3G frequency band in use
0	0	B1, B2, B3, B4, B5, B7, B8, B19	GSM 850, E-GSM 900, DCS 1800, PCS 1900, all 3G bands
0	1	B28	N/A
1	0	B18, B20, B26	N/A
1	1	N/A	N/A

[10] Not supported by LARA-R6001D, LARA-R6401D, LARA-R6801D data-only modules: I2S pins are by default set as Pin disabled

2.10. Reserved pins

LARA-R6 series modules include pins reserved for future use, marked as **RSVD**, which can all be left unconnected on the application board, except connecting a test point to the **RSVD #33** pin.

3. Pin definition

3.1. Pin assignment

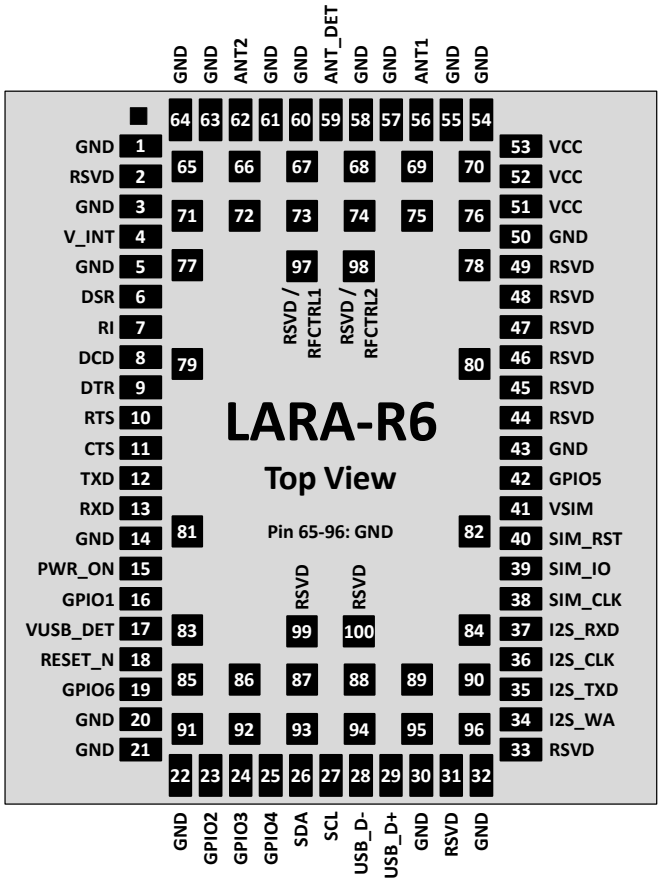

Figure 2: LARA-R6 series pin assignment (top view)

Table 9: LARA-R6 series pin-out

No	Name	Power domain	I/O	Description	Remarks
1	GND	-	N/A	Ground	All the GND pins are intended to be connected to ground
2	RSVD	-	N/A	RESERVED pin	Pin reserved for future use. Internally not connected.
3	GND	-	N/A	Ground	All the GND pins are intended to be connected to ground
4	V_INT	-	O	Generic Digital Interfaces supply output	V_INT = 1.8 V (typical) generated by the module when it is switched-on, outside low power deep sleep mode. See section 4.2.3 for detailed electrical specs. Provide test point for diagnostic purposes.
5	GND	-	N/A	Ground	All the GND pins are intended to be connected to ground
6	DSR	GDI	O / I	UART data set ready / AUX UART request to send	Circuit 107 in ITU-T V.24 (DSR output, push-pull, idle high, active low), alternatively configurable as second auxiliary UART RTS (HW flow control input, idle high, active low, with internal active pull-up enabled). See section 4.2.14 for detailed electrical specs.
7	RI	GDI	O / O	UART ring indicator / AUX UART clear to send	Circuit 125 in ITU-T V.24 (RI output, push-pull, idle high, active low), alternatively configurable as second auxiliary UART CTS (HW flow control output, push-pull, idle high, active low). See section 4.2.14 for detailed electrical specs.

No	Name	Power domain	I/O	Description	Remarks
8	DCD	GDI	O / O	UART data carrier detect / AUX UART data output	Circuit 109 in ITU-T V.24 (DCD output, push-pull, idle high, active low), alternatively settable as Second Auxiliary UART RXD (data output, push-pull, idle high, active low). See section 4.2.14 for detailed electrical specs.
9	DTR	GDI	I / I	UART data terminal ready / AUX UART data input	Circuit 108/2 in ITU-T V. 24 (DTR input, idle high, active low, with internal active pull-up enabled), alternatively settable as Second Auxiliary UART TXD (data input, idle high, active low, with internal active pull-up enabled). See section 4.2.14 for detailed electrical specs.
10	RTS	GDI	I	UART ready to send	Circuit 105 in ITU-T V.24 (RTS flow control input, idle high, active low, with internal active pull-up enabled). See section 4.2.14 for detailed electrical specs.
11	CTS	GDI	O	UART clear to send	Circuit 106 in ITU-T V.24 (CTS hardware flow control output, push-pull, idle high, active low). See section 4.2.14 for detailed electrical specs.
12	TXD	GDI	I	UART data input	Circuit 103 in ITU-T V.24 (TxD data input, idle high, active low, with internal active pull-up enabled). See section 4.2.14 for detailed electrical specs.
13	RXD	GDI	O	UART data output	Circuit 104 in ITU-T V.24 (RxD data output, push-pull, idle high, active low). See section 4.2.14 for detailed electrical specs.
14	GND	-	N/A	Ground	All the GND pins are intended to be connected to ground
15	PWR_ON	POS	I	Power-on input	Internal pull-up. Active low. See section 4.2.9 for detailed electrical specs. Provide test point for diagnostic purposes.
16	GPIO1	GDI	I/O	GPIO	GPIO configurable as described in section 2.8. Push-pull output type. See section 4.2.14 for detailed electrical specs.
17	VUSB_DET	VBUS	I	VBUS USB detect input	VBUS (5 V typical) USB supply generated by the host must be connected to this input pin during the switch-on boot sequence of the module to enable the USB interface. See section 4.2.12 for detailed electrical specs. Provide test point for diagnostic purposes.
18	RESET_N	ERS	I	External reset input	Internal pull-up. Active low. See section 4.2.10 for detailed electrical specs.
19	GPIO6	GDI	O	Clock output	Configurable clock output as described in section 2.7. Not supported by LARA-R6001D, LARA-R6401D, LARA-R6801D data-only modules. Push-pull output type. See section 4.2.14 / 4.2.14.1 for detailed electrical specs.
20	GND	-	N/A	Ground	All the GND pins are intended to be connected to ground
21	GND	-	N/A	Ground	All the GND pins are intended to be connected to ground
22	GND	-	N/A	Ground	All the GND pins are intended to be connected to ground
23	GPIO2	GDI	I/O	GPIO	GPIO configurable as described in section 2.8. Push-pull output type. See section 4.2.14 for detailed electrical specs.
24	GPIO3	GDI	I/O	GPIO	GPIO configurable as described in section 2.8. Push-pull output type. See section 4.2.14 for detailed electrical specs.
25	GPIO4	GDI	I/O	GPIO	GPIO configurable as described in section 2.8. Push-pull output type. See section 4.2.14 for detailed electrical specs.
26	SDA	I2C	I/O	I2C bus data line	Open drain output type. Active low. Internal 2.2 kΩ pull-up resistor to V_INT. See section 4.2.13 for detailed electrical specs.

No	Name	Power domain	I/O	Description	Remarks
27	SCL	I2C	O	I2C bus clock line	Open drain output type. Active low. Internal 2.2 kΩ pull-up resistor to V_INT. See section 4.2.13 for detailed electrical specs.
28	USB_D-	USB	I/O	USB Data Line D-	90 Ω nominal differential characteristic impedance. Pull-up, pull-down and series resistors as required by the USB 2.0 specifications [14] are part of the USB pin driver and need not be provided externally. See section 4.2.12 for detailed electrical specs. Provide test point for diagnostic purposes.
29	USB_D+	USB	I/O	USB Data Line D+	90 Ω nominal differential characteristic impedance. Pull-up, pull-down and series resistors as required by the USB 2.0 specifications [14] are part of the USB pin driver and need not be provided externally. See section 4.2.12 for detailed electrical specs. Provide test point for diagnostic purposes.
30	GND	-	N/A	Ground	All the GND pins are intended to be connected to ground
31	RSVD	-	N/A	RESERVED pin	Pin reserved for future use. Internally not connected.
32	GND	-	N/A	Ground	All the GND pins are intended to be connected to ground
33	RSVD	-	N/A	RESERVED pin	Pin reserved with special function. Provide test point for diagnostic purposes.
34	I2S_WA	GDI	O / I/O	I2S word alignment / GPIO	Settable as I2S word alignment, or as GPIO (see 2.6, 2.8). Push-pull output type. I2S not supported by LARA-R6001D, LARA-R6401D, LARA-R6801D data-only modules. See section 4.2.14 for detailed electrical specs.
35	I2S_TXD	GDI	O / I/O	I2S transmit data / GPIO	Configurable as I2S data output, or as GPIO (see 2.6, 2.8). Push-pull output type. I2S not supported by LARA-R6001D, LARA-R6401D, LARA-R6801D data-only modules. See section 4.2.14 for detailed electrical specs.
36	I2S_CLK	GDI	O / I/O	I2S clock / GPIO	Configurable as I2S clock, or as GPIO (see 2.6, 2.8). Push-pull output type. I2S not supported by LARA-R6001D, LARA-R6401D, LARA-R6801D data-only modules. See section 4.2.14 for detailed electrical specs.
37	I2S_RXD	GDI	I / I/O	I2S receive data / GPIO	Configurable as I2S data input, or as GPIO (see 2.6, 2.8). Push-pull output type. I2S not supported by LARA-R6001D, LARA-R6401D, LARA-R6801D data-only modules. See section 4.2.14 for detailed electrical specs.
38	SIM_CLK	SIM	O	SIM clock	See section 4.2.10 for detailed electrical specs.
39	SIM_IO	SIM	I/O	SIM data	Internal 4.7 kΩ pull-up resistor to VSIM. See section 4.2.10 for detailed electrical specs.
40	SIM_RST	SIM	O	SIM reset	See section 4.2.10 for detailed electrical specs.
41	VSIM	-	O	SIM supply output	VSIM = 1.80 V typical or 2.95 V typical generated by the module according to the external SIM card/chip type. See section 4.2.3 for detailed electrical specs.
42	GPIO5	GDI	I/O	GPIO	Configurable for SIM card detection, or as GPIO (see 2.8). Push-pull output type. See section 4.2.14 for detailed electrical specs.
43	GND	-	N/A	Ground	All the GND pins are intended to be connected to ground
44	RSVD	-	N/A	RESERVED pin	Pin reserved for future use.
45	RSVD	-	N/A	RESERVED pin	Pin reserved for future use.
46	RSVD	-	N/A	RESERVED pin	Pin reserved for future use.
47	RSVD	-	N/A	RESERVED pin	Pin reserved for future use.

No	Name	Power domain	I/O	Description	Remarks
48	RSVD	-	N/A	RESERVED pin	Pin reserved for future use.
49	RSVD	-	N/A	RESERVED pin	Pin reserved for future use.
50	GND	-	N/A	Ground	All the GND pins are intended to be connected to ground
51	VCC	-	I	Module supply input	Supply input for baseband Power Management Unit part. All VCC pins must be connected to external supply. See sections 4.2.3 and 4.2.4 for detailed specs.
52	VCC	-	I	Module supply input	Supply for RF Power Amplifiers part. All VCC pins must be connected to external supply. See sections 4.2.3 and 4.2.4 for detailed specs.
53	VCC	-	I	Module supply input	Supply for RF Power Amplifiers part. All VCC pins must be connected to external supply. See sections 4.2.3 and 4.2.4 for detailed specs.
54	GND	-	N/A	Ground	All the GND pins are intended to be connected to ground
55	GND	-	N/A	Ground	All the GND pins are intended to be connected to ground
56	ANT1	ANT	I/O	Primary antenna	50 Ω nominal characteristic impedance. Main Tx / Rx antenna interface. See section 4.2.5, 4.2.6, 0 for details.
57	GND	GND	N/A	Ground	All the GND pins are intended to be connected to ground
58	GND	GND	N/A	Ground	All the GND pins are intended to be connected to ground
59	ANT_DET	ADC	I	Antenna detection	ADC input for antenna presence detection function. See section 4.2.8 for detailed electrical specs.
60	GND	GND	N/A	Ground	All the GND pins are intended to be connected to ground
61	GND	GND	N/A	Ground	All the GND pins are intended to be connected to ground
62	ANT2	ANT	I	Secondary antenna	50 Ω nominal characteristic impedance. Rx only for Down-Link Rx diversity. See section 4.2.5, 4.2.6 for details.
63	GND	-	N/A	Ground	All the GND pins are intended to be connected to ground
64	GND	-	N/A	Ground	All the GND pins are intended to be connected to ground
65 - 96	GND	-	N/A	Ground	All the GND pins are intended to be connected to ground
97	RFCTRL1	GDI	O	RF control output	1.8 V push-pull output to dynamically control external RF antenna tuning IC, changing the high/low state in real time according to the cellular RF band in use by the module. Not supported by the LARA-R6001-00B, LARA-R6001D-00B and LARA-R6801-00B product versions. See section 4.2.14 for detailed electrical specs.
	RSVD		N/A	RESERVED pin	LARA-R6001-00B, LARA-R6001D-00B, LARA-R6801-00B product versions only. Pin reserved for future use.
98	RFCTRL2	GDI	O	RF control output	1.8 V push-pull output to dynamically control external RF antenna tuning IC, changing the high/low state in real time according to the cellular RF band in use by the module. Not supported by the LARA-R6001-00B, LARA-R6001D-00B and LARA-R6801-00B product versions. See section 4.2.14 for detailed electrical specs.
	RSVD	-	N/A	RESERVED pin	LARA-R6001-00B, LARA-R6001D-00B, LARA-R6801-00B product versions only. Pin reserved for future use.
99	RSVD	-	N/A	RESERVED pin	Pin reserved for future use.
100	RSVD	-	N/A	RESERVED pin	Pin reserved for future use.

☞ For more information about the pin-out, see the system integration manual [2].

☞ See appendix A for an explanation of the abbreviations and terms used.

4. Electrical specifications

⚠ Stressing the device above one or more of the ratings listed in the Absolute Maximum Rating section may cause permanent damage. These are stress ratings only. Operating the module at these or at any conditions other than those specified in the Operating Conditions sections (section 4.2) of the specification should be avoided. Exposure to Absolute Maximum Rating conditions for extended periods may affect device reliability.

☞ Electrical characteristics are defined according to the verification on a representative number of samples or according to the simulation.

☞ Where application information is given, it is advisory only and does not form part of the specification.

4.1. Absolute maximum rating

☞ Limit values given below are in accordance with the Absolute Maximum Rating System (IEC 134).

Table 10: Absolute maximum ratings

Symbol	Description	Condition	Min.	Max.	Unit
VCC	Module supply voltage	Input DC voltage at VCC pin	–0.5	6.0	V
VUSB_DET	USB detection pin	Input DC voltage at VUSB_DET pin	–0.3	5.5	V
USB	USB D+/D- pins	Input DC voltage at USB_D+ and USB_D- pins	–0.3	3.6	V
GDI	Generic digital interfaces	Input DC voltage at Generic digital interfaces pins	–0.3	2.1	V
I2C	I2C interface	Input DC voltage at I2C interface pins	–0.3	2.1	V
SIM	SIM interface	Input DC voltage at SIM interface pins	–0.3	3.6	V
ERS	External reset signal	Input DC voltage at RESET_N pin	–0.3	2.1	V
POS	Power-on input	Input DC voltage at PWR_ON pin	–0.3	2.1	V
Rho_ANT	Antenna ruggedness	Output RF load mismatch ruggedness at ANT pins		10:1	VSWR
Tstg	Storage Temperature		–40	+85	°C

⚠ The product is not protected against overvoltage or reversed voltages. If necessary, voltage spikes exceeding the power supply voltage specification, given in the table above, must be limited to values within the specified boundaries by using appropriate protection devices.

4.1.1. Maximum ESD

Table 11: Maximum ESD ratings

Parameter	Min.	Max.	Unit	Remarks
ESD sensitivity for all pins		1000	V	Human Body Model according to JS-001-2017
		500	V	Charged Device Model according to JS-002-2018

⚠ The cellular modules are Electrostatic Sensitive Devices and require special precautions when handling. See section 7.4 for ESD handling instructions.

4.2. Operating conditions

☞ Unless otherwise indicated, all operating condition specifications are at an ambient temperature of +25 °C.

⚠ Operation beyond the operating conditions is not recommended and extended exposure beyond them may affect device reliability.

4.2.1. Operating temperature range

Table 12: Environmental conditions

Parameter	Min.	Typical	Max.	Unit	Remarks
Normal operating temperature	–20	+25	+65	°C	Operating within 3GPP / ETSI specifications
Extended operating temperature	–40		+85	°C	Operating with possible slight deviation in RF performance outside normal operating range

4.2.2. Thermal parameters

Table 13: Thermal characterization parameters of the module

Symbol	Parameter	Typical	Unit	Remarks
Ψ_{M-A}	Module-to-Ambient thermal parameter	10	°C/W	Thermal characterization parameter $\Psi_{M-A} = (T_M - T_A) / P_H$ proportional to the delta between internal module temperature (T_M) and ambient temperature (T_A), due to heat power dissipation (P_H), with the module mounted on a 79 x 62 x 1.41 mm PCB, in still air conditions
Ψ_{M-C}	Module-to-Case thermal parameter	3	°C/W	Thermal characterization parameter $\Psi_{M-C} =(T_M - T_C) / P_H$ proportional to the delta between internal module temperature (T_M) and ambient temperature (T_C), due to heat power dissipation (P_H), with the module mounted on a 79 x 62 x 1.41 mm PCB, with a robust aluminium heat-sink and with forced air ventilation

4.2.3. Supply/power pins

Table 14: Input characteristics of the module Supply/Power pins

Symbol	Parameter	Min.	Typical	Max.	Unit
VCC	Normal operating input voltage for VCC pins 51, 52, 53 [11]	3.3	3.8	4.5	V
	Extended operating input voltage for VCC pin 51 [12]	3.1	3.8	4.5	V
	Extended operating input voltage for VCC pins 52, 53 [13]	2.8	3.8	4.5	V

Table 15: Output characteristics of the Supply/Power pins

Symbol	Parameter	Min.	Typical	Max.	Unit
VSIM	SIM supply output voltage, with external 1.8 V SIM		1.80		V
	SIM supply output voltage, with external 3.0 V SIM		2.95		V
V_INT	Generic Digital Interfaces supply output voltage		1.80		V
	Generic Digital Interfaces supply output current capability			70	mA

[11] Operating within 3GPP / ETSI specifications.

[12] The voltage has to be above the extended operating range minimum limit for the **VCC** pin 51 (supply input for the baseband Power Management Unit and the Transceiver) to switch-on the module and to avoid possible switch-off of the module.

[13] Operating with possible slight deviation in RF performance outside normal operating range. The Power Amplifier may not be fully functional when the voltage drops below the extended operating range minimum limit defined for the **VCC** pins 52 and 53 (supply input for the internal Power Amplifier).

4.2.4. Current consumption

Table 16: LARA-R6 series modules VCC current consumption

Mode	Condition	Tx power	Min	Typ[14]	Max[15]	Unit
Power-off mode	Averaged current value. Module switched off			9		µA
PSM mode [16]	Averaged current value Module in deep-sleep Power Saving Mode			11		µA
Cyclic Idle/Active-Mode (Low power mode enabled by +UPSV, Module registered with network)	Averaged current value, Idle mode floor current, USB not connected			0.9		mA
	Averaged current value, Idle mode floor current, USB suspended			1.2		mA
	Averaged current value, Cyclic eDRX = 655.36 s, USB not connected			1.1		mA
	Averaged current value, Cyclic eDRX = 655.36 s, USB suspended			1.4		mA
	Averaged current value, Cyclic eDRX = 20.48 s, USB not connected			1.6		mA
	Averaged current value, Cyclic eDRX = 20.48 s, USB suspended			1.9		mA
	Averaged current value, Cyclic DRX = 2.56 s, USB not connected			1.9		mA
	Averaged current value, Cyclic DRX = 2.56 s, USB suspended			2.2		mA
Active-Mode (Low power mode disabled by +UPSV, Module registered with network)	Averaged current value, Cyclic DRX = 2.56 s, USB not connected			10.6		mA
	Averaged current value, Cyclic DRX = 2.56 s, USB in use			27.0		mA
2G Connected Mode (Tx / Rx call enabled)	Peak value at 1-slot GMSK Tx burst, 900 MHz band	Maximum		1.5	1.9	A
	Averaged value along 1-slot GMSK call, 900 MHz band	Minimum		50		mA
		Maximum		200		mA
	Averaged value along 1-slot GMSK call, 1800 MHz band	Minimum		50		mA
		Maximum		150		mA
3G Connected Mode (Tx / Rx enabled)	Averaged value along 3G Tx/Rx	Minimum		200		mA
		0 dBm		220		mA
		12 dBm		300		mA
		18 dBm		440		mA
		Maximum		620		mA
LTE Connected Mode (Tx / Rx enabled)	Averaged value along LTE-FDD Tx/Rx	Minimum		250		mA
		0 dBm		270		mA
		12 dBm		320		mA
		18 dBm		450		mA
		Maximum		650		mA

[14] Typical values with a matched antenna
[15] Maximum values with a mismatched antenna
[16] Not supported by “00B” products version

4.2.5. LTE RF characteristics

The LTE bands supported by each LARA-R6 module are defined in Table 3, while Table 17 describes the transmitting and receiving frequencies for each LTE band according to 3GPP TS 36.521-1 [10].

Table 17: LTE operating RF frequency bands

Parameter		Min.	Max.	Unit	Remarks
Frequency range FDD band 71 (600 MHz)	Uplink	663	698	MHz	Module transmits
	Downlink	617	652	MHz	Module receives
Frequency range FDD Band 12 (700 MHz)	Uplink	699	716	MHz	Module transmits
	Downlink	729	746	MHz	Module receives
Frequency range FDD Band 13 (700 MHz)	Uplink	777	787	MHz	Module transmits
	Downlink	746	756	MHz	Module receives
Frequency range FDD Band 14 (700 MHz)	Uplink	788	798	MHz	Module transmits
	Downlink	758	768	MHz	Module receives
Frequency range FDD Band 28 (700 MHz)	Uplink	703	748	MHz	Module transmits
	Downlink	758	803	MHz	Module receives
Frequency range FDD Band 20 (800 MHz)	Uplink	832	862	MHz	Module transmits
	Downlink	791	821	MHz	Module receives
Frequency range FDD band 26 (850 MHz)	Uplink	814	849	MHz	Module transmits
	Downlink	859	894	MHz	Module receives
Frequency range FDD band 18 (850 MHz)	Uplink	815	830	MHz	Module transmits
	Downlink	860	875	MHz	Module receives
Frequency range FDD Band 19 (850 MHz)	Uplink	830	845	MHz	Module transmits
	Downlink	875	890	MHz	Module receives
Frequency range FDD Band 5 (850 MHz)	Uplink	824	849	MHz	Module transmits
	Downlink	869	894	MHz	Module receives
Frequency range FDD Band 8 (900 MHz)	Uplink	880	915	MHz	Module transmits
	Downlink	925	960	MHz	Module receives
Frequency range FDD Band 4 (1700 MHz)	Uplink	1710	1755	MHz	Module transmits
	Downlink	2110	2155	MHz	Module receives
Frequency range FDD band 66 (1700 MHz)	Uplink	1710	1780	MHz	Module transmits
	Downlink	2110	2200	MHz	Module receives
Frequency range FDD Band 3 (1800 MHz)	Uplink	1710	1785	MHz	Module transmits
	Downlink	1805	1880	MHz	Module receives
Frequency range FDD Band 2 (1900 MHz)	Uplink	1850	1910	MHz	Module transmits
	Downlink	1930	1990	MHz	Module receives
Frequency range TDD Band 39 (1900 MHz)	Uplink	1880	1920	MHz	Module transmits
	Downlink	1880	1920	MHz	Module receives
Frequency range FDD Band 1 (2100 MHz)	Uplink	1920	1980	MHz	Module transmits
	Downlink	2110	2170	MHz	Module receives
Frequency range TDD Band 40 (2300 MHz)	Uplink	2300	2400	MHz	Module transmits
	Downlink	2300	2400	MHz	Module receives
Frequency range TDD Band 38 (2600 MHz)	Uplink	2570	2620	MHz	Module transmits
	Downlink	2570	2620	MHz	Module receives
Frequency range TDD Band 41 (2600 MHz)	Uplink	2496	2690	MHz	Module transmits
	Downlink	2496	2690	MHz	Module receives
Frequency range FDD Band 7 (2600 MHz)	Uplink	2500	2570	MHz	Module transmits
	Downlink	2620	2690	MHz	Module receives

LARA-R6 series modules include a UE Power Class 3 LTE transmitter (see Table 3), with output power and characteristics according to 3GPP TS 36.521-1 [10].

LARA-R6 series modules LTE receiver characteristics are compliant to 3GPP TS 36.521-1 [10], with LTE conducted receiver sensitivity performance described in Table 18.

Table 18: LTE receiver sensitivity performance

Parameter	Min.	Typical	Max.	Unit	Remarks
Receiver input sensitivity Band 71 (600 MHz)		–105		dBm	Channel bandwidth = 5 MHz
		–100		dBm	Channel bandwidth = 20 MHz
Receiver input sensitivity Band 12 (700 MHz)		–110		dBm	Channel bandwidth = 1.4 MHz
		–104		dBm	Channel bandwidth = 5 MHz
		–101		dBm	Channel bandwidth = 10 MHz
Receiver input sensitivity Band 13 (700 MHz)		–105		dBm	Channel bandwidth = 5 MHz
		–102		dBm	Channel bandwidth = 10 MHz
Receiver input sensitivity Band 14 (700 MHz)		–105		dBm	Channel bandwidth = 5 MHz
		–102		dBm	Channel bandwidth = 10 MHz
Receiver input sensitivity Band 28 (700 MHz)		–107		dBm	Channel bandwidth = 3 MHz
		–105		dBm	Channel bandwidth = 5 MHz
		–99		dBm	Channel bandwidth = 20 MHz
Receiver input sensitivity Band 20 (800 MHz)		–105		dBm	Channel bandwidth = 5 MHz
		–99		dBm	Channel bandwidth = 20 MHz
Receiver input sensitivity Band 26 (850 MHz)		–110		dBm	Channel bandwidth = 1.4 MHz
		–105		dBm	Channel bandwidth = 5 MHz
		–100		dBm	Channel bandwidth = 15 MHz
Receiver input sensitivity Band 18 (850 MHz)		–105		dBm	Channel bandwidth = 5 MHz
		–101		dBm	Channel bandwidth = 15 MHz
Receiver input sensitivity Band 19 (850 MHz)		–105		dBm	Channel bandwidth = 5 MHz
		–100		dBm	Channel bandwidth = 15 MHz
Receiver input sensitivity Band 5 (850 MHz)		–110		dBm	Channel bandwidth = 1.4 MHz
		–105		dBm	Channel bandwidth = 5 MHz
		–102		dBm	Channel bandwidth = 10 MHz
Receiver input sensitivity Band 8 (900 MHz)		–110		dBm	Channel bandwidth = 1.4 MHz
		–105		dBm	Channel bandwidth = 5 MHz
		–102		dBm	Channel bandwidth = 10 MHz
Receiver input sensitivity Band 4 (1700 MHz)		–110		dBm	Channel bandwidth = 1.4 MHz
		–104		dBm	Channel bandwidth = 5 MHz
		–99		dBm	Channel bandwidth = 20 MHz
Receiver input sensitivity Band 66 (1700 MHz)		–109		dBm	Channel bandwidth = 1.4 MHz
		–104		dBm	Channel bandwidth = 5 MHz
		–99		dBm	Channel bandwidth = 20 MHz
Receiver input sensitivity Band 3 (1800 MHz)		–107		dBm	Channel bandwidth = 1.4 MHz
		–102		dBm	Channel bandwidth = 5 MHz
		–97		dBm	Channel bandwidth = 20 MHz
Receiver input sensitivity Band 2 (1900 MHz)		–110		dBm	Channel bandwidth = 1.4 MHz
		–104		dBm	Channel bandwidth = 5 MHz
		–99		dBm	Channel bandwidth = 20 MHz
Receiver input sensitivity Band 1 (2100 MHz)		–104		dBm	Channel bandwidth = 5 MHz
		–99		dBm	Channel bandwidth = 20 MHz
Receiver input sensitivity Band 7 (2600 MHz)		–103		dBm	Channel bandwidth = 5 MHz
		–98		dBm	Channel bandwidth = 20 MHz

Parameter	Min.	Typical	Max.	Unit	Remarks
Receiver input sensitivity Band 39 (1900 MHz)		–105		dBm	Channel bandwidth = 5 MHz
		–100		dBm	Channel bandwidth = 20 MHz
Receiver input sensitivity Band 40 (2300 MHz)		–104		dBm	Channel bandwidth = 5 MHz
		–99		dBm	Channel bandwidth = 20 MHz
Receiver input sensitivity Band 38 (2600 MHz)		–103		dBm	Channel bandwidth = 5 MHz
		–98		dBm	Channel bandwidth = 20 MHz
Receiver input sensitivity Band 41 (2600 MHz)		–103		dBm	Channel bandwidth = 5 MHz
		–98		dBm	Channel bandwidth = 20 MHz
Condition: 50 Ω, throughput > 95%, dual receiver, QPSK modulation, other settings as per clause 7.3 of 3GPP TS 36.521-1 [10]					

4.2.6. 3G RF characteristics

The 3G bands supported by LARA-R6 series modules are defined in Table 3, while Table 19 describes the transmitting and receiving frequencies for each 3G band according to 3GPP TS 34.121-1 [11].

Table 19: 3G operating RF frequency bands

Parameter		Min.	Max.	Unit	Remarks
Frequency range Band 5 (850 MHz)	Uplink	824	849	MHz	Module transmits
	Downlink	869	894	MHz	Module receives
Frequency range Band 8 (900 MHz)	Uplink	880	915	MHz	Module transmits
	Downlink	925	960	MHz	Module receives
Frequency range Band 2 (1900 MHz)	Uplink	1850	1910	MHz	Module transmits
	Downlink	1930	1990	MHz	Module receives
Frequency range Band 1 (2100 MHz)	Uplink	1920	1980	MHz	Module transmits
	Downlink	2110	2170	MHz	Module receives

LARA-R6 series modules include a UE Power Class 3 3G transmitter (see Table 3), with output power and characteristics according to 3GPP TS 34.121-1 [11].

LARA-R6 series modules 3G receiver characteristics are compliant to 3GPP TS 34.121-1 [11], with 3G conducted receiver sensitivity performance described in Table 20.

Table 20: 3G receiver sensitivity performance

Parameter	Min.	Typical	Max.	Unit	Remarks
Receiver input sensitivity Band 5 (850 MHz)		–115		dBm	Downlink RF level for RMC @ BER < 0.1%
Receiver input sensitivity Band 8 (900 MHz)		–115		dBm	Downlink RF level for RMC @ BER < 0.1%
Receiver input sensitivity Band 2 (2100 MHz)		–114		dBm	Downlink RF level for RMC @ BER < 0.1%
Receiver input sensitivity Band 1 (2100 MHz)		–114		dBm	Downlink RF level for RMC @ BER < 0.1%
Condition: 50 Ω, dual receiver, other settings as per clause 6.2 of 3GPP TS 34.121-1 [11]					

4.2.7. 2G RF characteristics

The 2G bands supported by LARA-R6 series modules are defined in Table 3, while Table 21 describes Transmitting and Receiving frequencies for each 2G band according to 3GPP TS 51.010-1 [12].

Table 21: 2G operating RF frequency bands

Parameter		Min	Max	Unit	Remarks
Frequency range GSM 850	Uplink	824	849	MHz	Module transmits
	Downlink	869	894	MHz	Module receives
Frequency range E-GSM 900	Uplink	880	915	MHz	Module transmits
	Downlink	925	960	MHz	Module receives
Frequency range DCS 1800	Uplink	1710	1785	MHz	Module transmits
	Downlink	1805	1880	MHz	Module receives
Frequency range PCS 1900	Uplink	1850	1910	MHz	Module transmits
	Downlink	1930	1990	MHz	Module receives

LARA-R6 series modules include a GMSK Power Class 4 transmitter for 850 / 900 MHz bands, GMSK Power Class 1 transmitter for 1800 / 1900 MHz bands, 8-PSK Power Class E2 transmitter for all 2G bands (see Table 3), with output power and characteristics according to 3GPP TS 51.010-1 [12]. LARA-R6 series modules 2G receiver characteristics are compliant to 3GPP TS 51.010-1 [12], with conducted receiver sensitivity performance described in Table 22.

Table 22: 2G receiver sensitivity performance

Parameter	Min.	Typical	Max.	Unit	Remarks
Receiver input sensitivity GSM 850 / E-GSM 900		–110		dBm	Downlink RF level @ BER Class II < 2.4%
Receiver input sensitivity DCS 1800 / PCS 1900		–109		dBm	Downlink RF level @ BER Class II < 2.4%
Condition: 50 Ω, other settings as per clause 14.2.1 of 3GPP TS 51.010-1 [12]					

4.2.8. ANT_DET pin

Table 23: ANT_DET pin characteristics

Parameter	Min.	Typ.	Max.	Unit	Remarks
Output DC current pulse value		35		µA	Generated by means of the +UANTR AT command
Output DC current pulse time length		1160		µs	Generated by means of the +UANTR AT command

4.2.9. PWR_ON pin

Table 24: PWR_ON pin characteristics

Parameter	Min.	Typical	Max.	Unit	Remarks
Internal supply for PWR_ON Input Signal		1.8		V	PWR_ON input is pulled up to an internal voltage rail minus a diode drop: the voltage present at PWR_ON pin is normally 0.8 V typical.
Low-level input	-0.30		0.35	V	
Pull-up resistance	150	200	250	kΩ	Internal active pull-up
Input leakage current	-0.20		0.20	µA	
PWR_ON low time	0.15		3.20	s	Low time to trigger module switch on from power off mode, or wake-up from ultra-low power PSM deep-sleep mode
	1.50			s	Low time to trigger module graceful switch off

4.2.10. RESET_N pin

Table 25: RESET_N pin characteristics

Parameter	Min.	Typical	Max.	Unit	Remarks
Internal supply for RESET_N Input Signal		1.8		V	
Low-level input	-0.30		0.63	V	
Pull-up resistance		37		kΩ	Internal active pull-up
Input leakage current	-0.20		0.20	µA	
RESET_N low time	0.05		6	s	Low time to trigger module reset (reboot)
	10			s	Low time to trigger module abrupt emergency switch off

4.2.11. SIM pins

The SIM pins are a dedicated interface to the external SIM card/chip. The electrical characteristics fulfil the regulatory specification requirements. The values in Table 26 are for information only.

Table 26: SIM pins characteristics

Parameter	Min.	Typ.	Max.	Unit	Remarks
Low-level input	-0.30		0.2*VSIM	V	
High-level input	0.7*VSIM		VSIM+0.3	V	
Low-level output		0	0.4	V	Max value at I_{OL} = +2.0 mA
High-level output	0.8*VSIM	VSIM		V	Max value at I_{OL} = +2.0 mA
Internal pull-up resistor on SIM_IO		4.7		kΩ	Internal pull-up to VSIM supply
Input leakage current	-2		2	µA	V_{IN} =0 V or V_{IN} =VSIM
Clock frequency on SIM_CLK		4.8		MHz	

4.2.12. USB pins

USB data lines (**USB_D+ / USB_D–**) are compliant with the USB 2.0 high-speed specification. See the Universal Serial Bus specification revision 2.0 [14] for detailed characteristics. The values in Table 27 are for information only.

Table 27: USB pins characteristics

Parameter	Min.	Typical	Max.	Unit	Remarks
VUSB_DET pin, High-level input	1.50	5.00	5.25	V	AT+UUSBDET=0 (factory-programmed setting)
	4.40	5.00	5.25	V	AT+UUSBDET=1
High-speed squelch detection threshold	100		150	mV	Input differential signal amplitude
High speed disconnect detection threshold	525		625	mV	Input differential signal amplitude
High-speed data signaling input	–50		500	mV	Common mode voltage range
High-speed idle output level	–10		10	mV	
High-speed data signaling output high level	360		440	mV	
High-speed data signaling output low level	–10		10	mV	
Chirp J level (output differential voltage)	700		1100	mV	
Chirp K level (output differential voltage)	–900		–500	mV	

4.2.13. I2C pins

I2C lines (**SCL** and **SDA**) are compliant with the I2C-bus standard mode specification. See I2C-bus specification [15] for detailed electrical characteristics. The values in Table 28 are for information only.

Table 28: I2C pins characteristics

Parameter	Min	Typical	Max	Unit	Remarks
Internal supply for GDI domain		1.80		V	Digital I/O Interfaces supply (V_INT)
Low-level input	-0.30	0.00	0.63	V	
High-level input	1.17	1.80	2.10	V	
Low-level output		0.00	0.45	V	Max value at I_{OL} = +2.0 mA
Internal pull-up resistance		2.2		kΩ	
Input/output leakage current	-1		1	µA	V_{IN} =0 V or V_{IN} =1.8V
Clock frequency on SCL		100		kHz	

4.2.14. Generic Digital Interfaces pins

Table 29: GDI pins characteristics

Parameter	Min	Typical	Max	Unit	Remarks
Internal supply for GDI domain		1.80		V	Digital I/O Interfaces supply (V_INT)
Low-level input	-0.30	0.00	0.63	V	
High-level input	1.17	1.80	2.10	V	
Low-level output		0.00	0.45	V	Max value at IOL = +2.0 mA
High-level output	1.35	1.80		V	Min value at IOH = –2.0 mA
Input leakage current	-1		1	µA	V_{IN} =0 V or V_{IN} =1.8V
Internal pull-up /-down resistance	55		390	kΩ	

4.2.14.1. AC characteristics of clock output pin (GPIO6)

Table 30: AC characteristics of GPIO6 clock output pin

Parameter	Description	Min	Typical	Max	Unit	Remarks
1/T1	GPIO6 clock output frequency		12.288		MHz	AT+UMCLK=2

4.2.14.2. AC characteristics of I2S pins

Figure 3 and Table 31 show the AC characteristics in Normal I2S mode (long synchronization signal).

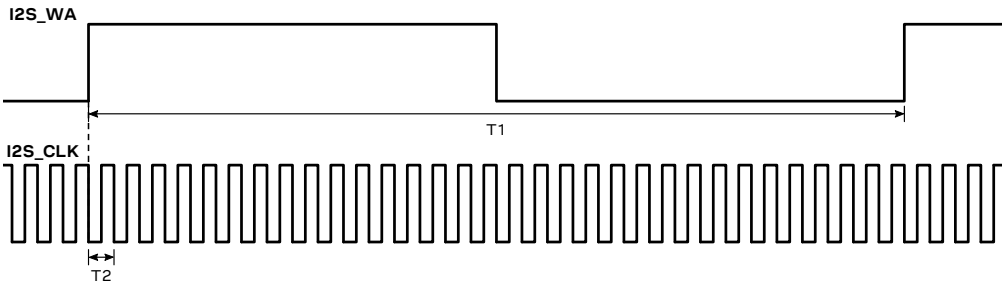

Figure 3: AC characteristics of digital audio interface in Normal I2S mode (long synchronization signal), host role

Table 31: AC characteristics of digital audio interface in Normal I2S mode (long synchronization signal), host role

Parameter	Description	Min	Typical	Max	Unit	Remarks
1/T1	I2S_WA synchronization signal frequency		16		kHz	<I2S_sample_rate> = 3
			48		kHz	<I2S_sample_rate> = 8
1/T2	I2S_CLK bit clock frequency		32		1/T1	<I2S_mode> = 14

Figure 4 and Table 32 show the AC characteristics in PCM I2S mode (short synchronization signal).

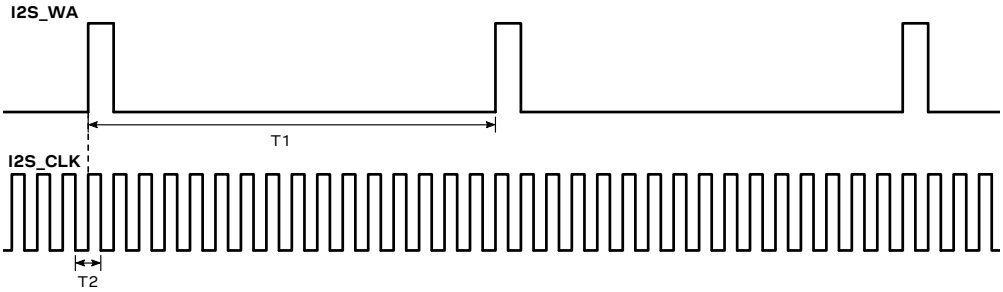

Figure 4: AC characteristics of digital audio interface in PCM mode (short synchronization signal), host role

Table 32: AC characteristics of digital audio interface in PCM mode (short synchronization signal), host role

Parameter	Description	Min	Typical	Max	Unit	Remarks
1/T1	I2S_WA synchronization signal frequency		16		kHz	<I2S_sample_rate> = 3
			48		kHz	<I2S_sample_rate> = 8
1/T2	I2S_CLK bit clock frequency		16		1/T1	<I2S_mode> = 30

4.2.15. Smart temperature supervisor

Table 33: Thresholds definition for the "Smart temperature supervisor" feature on the LARA-R6 series modules

Symbol	Parameter	Temperature
t_{-2}	Low temperature shutdown	–40 °C
t_{-1}	Low temperature warning	–30 °C
t_{+1}	High temperature warning	+77 °C
t_{+2}	High temperature shutdown	+97 °C

☞ The sensor measures the temperature inside the shield, that can differ from ambient temperature

4.3. Parameters for ATEX applications

This section provides useful parameters and information to integrate LARA-R6 series modules in applications intended for use in areas with potentially explosive atmospheres (ATEX), describing:

- Total internal capacitance and inductance of LARA-R6 series modules (see Table 34)
- Maximum RF output power at the antenna pin of LARA-R6 series modules (see Table 35)

☞ Any specific applicable requirement for the implementation of the host apparatus integrating the modules, intended for use in potentially explosive atmospheres, must be fulfilled according to the exact applicable standards: check the detailed requisites on the pertinent normative for the application device, as for example IEC 60079-0 [16], IEC 60079-11 [17], IEC 60079-26 [18] standards.

☞ The certification of the application device that integrates a LARA-R6 series module and the compliance of the application device with all the applicable certification schemes, directives and standards required for use in potentially explosive atmospheres are the sole responsibility of the application device manufacturer.

Table 34 describes the maximum total internal capacitance and the maximum total internal inductance, considering internal parts tolerance, provided by LARA-R6 series modules.

Table 34: LARA-R6 series maximum total internal capacitance and maximum total internal inductance

Module	Parameter	Description	Value	Unit
LARA-R6001, LARA-R6001D	Ci	Maximum total internal capacitance	496	µF
	Li	Maximum total internal inductance	9.8	µH
LARA-R6401, LARA-R6401D	Ci	Maximum total internal capacitance	493	µF
	Li	Maximum total internal inductance	9.7	µH
LARA-R6801, LARA-R6801D	Ci	Maximum total internal capacitance	496	µF
	Li	Maximum total internal inductance	9.7	µH

Table 35 describes the maximum RF output power transmitted by LARA-R6 series modules from the primary antenna (**ANT1**) pin as Power Class 4 Mobile Stations for GSM 850 / E-GSM 900 bands and/or as Power Class 3 User Equipment for the LTE / UMTS bands.

Table 35: LARA-R6 series antenna pin (ANT1) maximum RF output power

Module	Parameter	Description	Value	Unit
LARA-R6001, LARA-R6001D	ANT1 Pout	Maximum RF output power from ANT1 pin	33	dBm
LARA-R6401, LARA-R6401D	ANT1 Pout	Maximum RF output power from ANT1 pin	24	dBm
LARA-R6801, LARA-R6801D	ANT1 Pout	Maximum RF output power from ANT1 pin	33	dBm

5. Mechanical specifications

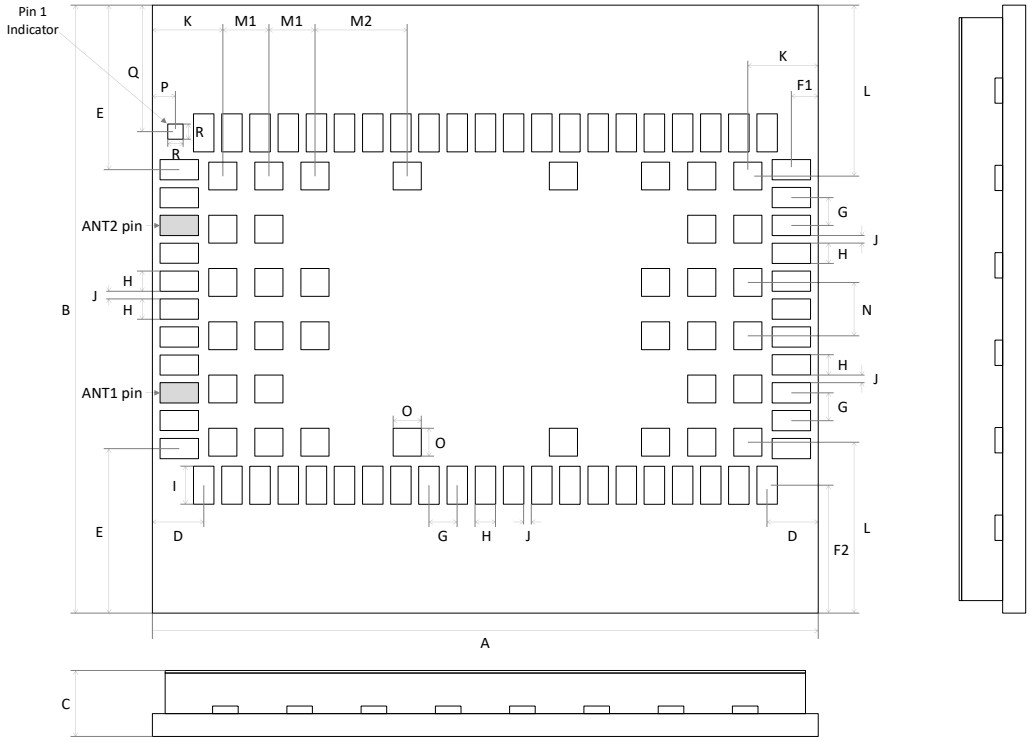

Figure 5: LARA-R6 series dimensions (bottom and side views)

Table 36: LARA-R6 series dimensions

Parameter	Description	Typical		Tolerance	
A	Module height [mm]	26.0	(1023.6 mil)	+0.20/–0.20	(+7.9/–7.9 mil)
B	Module width [mm]	24.0	(944.9 mil)	+0.20/–0.20	(+7.9/–7.9 mil)
C	Module thickness [mm]	2.6	(102.4 mil)	+0.27/–0.17	(+10.6/–6.7 mil)
D	Horizontal edge to lateral pin pitch [mm]	2.0	(78.7 mil)	+0.20/-0.20	(+7.9/-7.9 mil)
E	Vertical edge to lateral pin pitch [mm]	6.5	(255.9 mil)	+0.20/-0.20	(+7.9/-7.9 mil)
F1	Edge to lateral pin pitch [mm]	1.05	(41.3 mil)	+0.20/-0.20	(+7.9/-7.9 mil)
F2	Edge to lateral pin pitch [mm]	5.05	(198.8 mil)	+0.20/-0.20	(+7.9/-7.9 mil)
G	Lateral pin to pin pitch [mm]	1.1	(43.3 mil)	+0.05/-0.05	(+2.0/-2.0 mil)
H	Lateral pin height [mm]	0.8	(31.5 mil)	+0.05/-0.05	(+2.0/-2.0 mil)
I	Lateral pin width [mm]	1.5	(59.1 mil)	+0.05/-0.05	(+2.0/-2.0 mil)
J	Lateral pin to pin distance [mm]	0.3	(11.8 mil)	+0.05/-0.05	(+2.0/-2.0 mil)
K	Horizontal edge to central pin pitch [mm]	2.75	(108.3 mil)	+0.20/-0.20	(+7.9/-7.9 mil)
L	Vertical edge to central pin pitch [mm]	6.75	(265.7 mil)	+0.20/-0.20	(+7.9/-7.9 mil)
M1	Central pin to pin horizontal pitch [mm]	1.8	(70.9 mil)	+0.05/-0.05	(+2.0/-2.0 mil)
M2	Central pin to pin horizontal pitch [mm]	3.6	(141.7 mil)	+0.05/-0.05	(+2.0/-2.0 mil)
N	Central pin to pin vertical pitch [mm]	2.1	(82.7 mil)	+0.05/-0.05	(+2.0/-2.0 mil)
O	Central pin height and width [mm]	1.1	(43.3 mil)	+0.05/-0.05	(+2.0/-2.0 mil)
P	Horizontal edge to pin 1 indicator pitch [mm]	0.9	(35.4 mil)	+0.20/-0.20	(+7.9/-7.9 mil)
Q	Vertical edge to pin 1 indicator pitch [mm]	5.0	(196.8 mil)	+0.20/-0.20	(+7.9/-7.9 mil)
R	Pin 1 indicator height and width [mm]	0.6	(23.6 mil)	+0.05/-0.05	(+2.0/-2.0 mil)
Weight	Module weight [g]	4			

☞ Module width tolerance +/–0.20 mm may be exceeded close to the corners of the PCB due to the cutting process. In the worst case, the width could be +0.40 mm more than the typical value.

☞ For information regarding footprint and paste mask recommended for the application board integrating the cellular module, see the system integration manual [2].

6. Qualification and approvals

6.1. Reliability tests

Reliability tests for LARA-R6 series modules are executed according to our qualification policy, based on AEC-Q104 standard.

6.2. Approvals

LARA-R6 series modules comply with the Directive 2011/65/EU of the European Parliament and the Council on the Restriction of Use of certain Hazardous Substances in Electrical and Electronic Equipment (EU RoHS 2) and its amendment Directive (EU) 2015/863 (EU RoHS 3).

The LARA-R6 series modules are RoHS 3 compliant. No natural rubbers, hygroscopic materials, or materials containing asbestos are employed.

Table 37: LARA-R6 series main certification approvals summary

Certification scheme	LARA-R6001	LARA-R6001D	LARA-R6401	LARA-R6401D	LARA-R6801	LARA-R6801D
GCF conformance	●	●	●	●	●	■
PTCRB conformance	●	●	●	●		
CE (Europe)	●	●			●	■
FCC (United States) FCC ID	● XPYUBX21BE01 2BRZXUBX21BE01	● XPYUBX21BE01 2BRZXUBX21BE01	● XPYUBX21BE02 2BRZXUBX21BE02	● XPYUBX21BE02 2BRZXUBX21BE02		
ISED (Canada) ISED certification number	● 8595A-UBX21BE01 34528-UBX21BE01	● 8595A-UBX21BE01 34528-UBX21BE01	● 8595A-UBX21BE02 34528-UBX21BE02	● 8595A-UBX21BE02 34528-UBX21BE02		
NCC (Taiwan)	●	●			●	■
ACMA RCM (Australia)	●	●			●	■
GITEKI (Japan)	●	●			●	■
ANATEL (Brazil)	●	●				
KC (South Korea)		●				
AT&T	■	●	●	●		
FirstNet			●	●		
Verizon	■	■	●	●		
T-Mobile US		■	■	■		
Deutsche Telekom		■				
Telefonica		■				
Telstra		■				
NTT Docomo						■
SoftBank Mobile						■
KDDI						■
● = Approval available with “00B” and “01B” product versions ■ = Additional approval available with “01B” product versions						

☞ The above listed certifications might not be available for all the different product type numbers. Please contact us for the complete list of certification approvals available for the selected product ordering number.

7. Product handling & soldering

7.1. Packaging

LARA-R6 series modules are delivered as hermetically sealed reeled tapes, to enable efficient production, production lot set-up and tear-down.

For more information about packaging, see the product packaging reference guide [4].

7.1.1. Reels

LARA-R6 series modules are deliverable in quantities of 150 pieces on a reel. The modules are delivered using the reel type B2 described in the product packaging reference guide [4].

Quantities of less than 150 pieces are also available. Contact us for more information.

7.1.2. Tapes

Figure 6 shows the position and the orientation of LARA-R6 series modules as they are delivered on the tape, while Figure 7 and Table 38 below specify the tape dimensions.

Figure 6: Orientation for LARA modules on tape

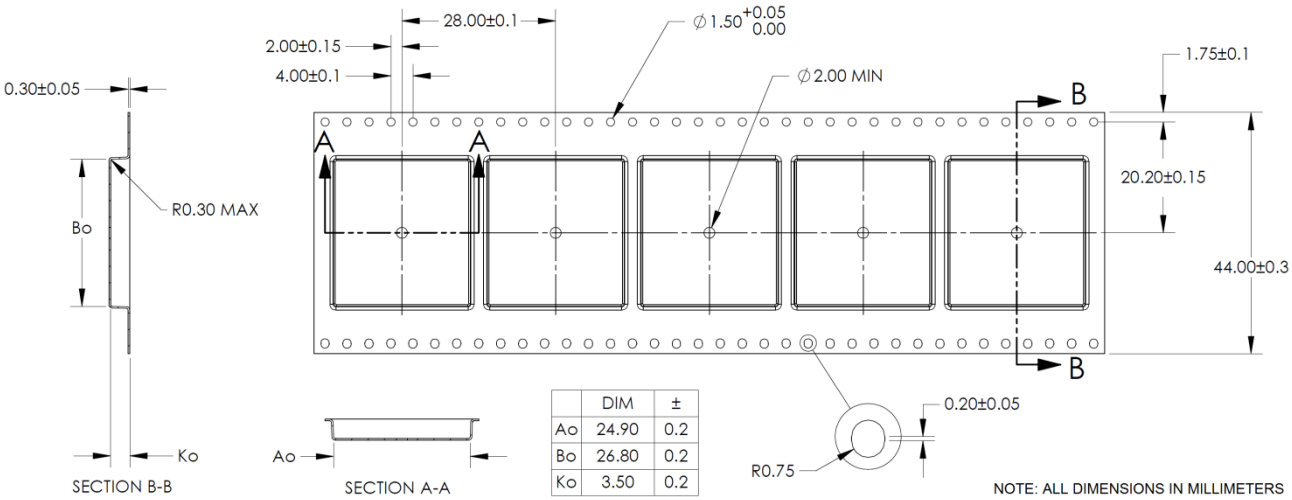

	DIM	±
Ao	24.90	0.2
Bo	26.80	0.2
Ko	3.50	0.2

Figure 7: LARA-R6 series modules tape dimensions

Table 38: LARA-R6 series modules tape dimensions

Parameter	Typical value	Tolerance	Unit
A_0	24.9	0.2	mm
B_0	26.8	0.2	mm
K_0	3.5	0.2	mm

☞ 10 sprocket hole pitch cumulative tolerance ± 0.2 mm.

☞ Pocket position relative to sprocket hole measured as true position of pocket, not pocket hole.

☞ A_0 and B_0 are measured on a plane at a distance "R" above the bottom of the pocket.

7.2. Moisture sensitivity levels

⚠ LARA-R6 series modules are Moisture Sensitive Devices (MSD) in accordance with the IPC/JEDEC specification.

The Moisture Sensitivity Level (MSL) relates to the packaging and handling precautions required. LARA-R6 series modules are rated at MSL level 4. For more information regarding moisture sensitivity levels, labeling, storage and drying see the package information user guide [4].

☞ For the MSL standard, see IPC/JEDEC J-STD-020 (can be downloaded from www.jedec.org).

7.3. Reflow soldering

Reflow profiles are to be selected according to our recommendations (see the system integration manual [2]).

⚠ Failure to observe these recommendations can result in severe damage to the device!

7.4. ESD precautions

⚠ LARA-R6 series modules contain highly sensitive electronic circuitry and are Electrostatic Sensitive Devices (ESD). Handling LARA-R6 series modules without proper ESD protection may destroy or damage them permanently.

LARA-R6 series modules are Electrostatic Sensitive Devices (ESD) and require special ESD precautions typically applied to ESD sensitive components.

Table 11 details the maximum ESD ratings of the LARA-R6 series modules.

Proper ESD handling and packaging procedures must be applied throughout the processing, handling and operation of any application that incorporates the LARA-R6 series module.

ESD precautions should be implemented on the application board where the module is mounted, as described in the system integration manual [2].

⚠ Failure to observe these recommendations can result in severe damage to the device!

8. Labeling and ordering information

8.1. Product labeling

The label of LARA-R6 series modules include important product information as described in Figure 8, as the label includes: the pin 1 indicator, the product name, the IMEI number, the production date, the applicable regulatory certifications' info, and the production country.

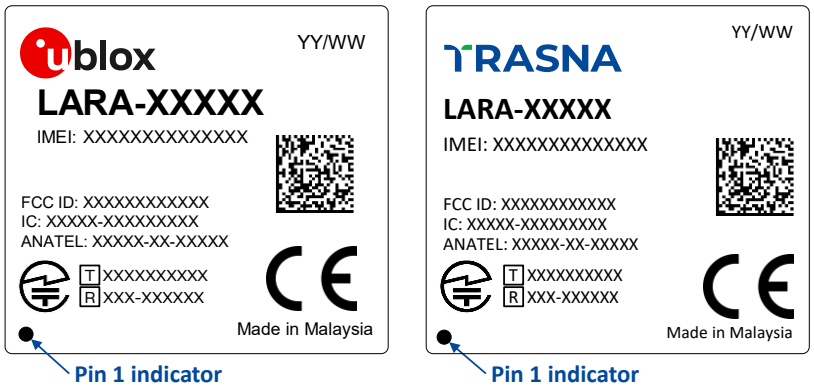

Figure 8: Illustrative examples of LARA-R6 series modules' label

8.2. Explanation of codes

Three different product code formats are used. The Product Name is used in documentation such as this data sheet and identifies all the versions of the product. The Ordering Code includes options and quality, while the Type Number includes the hardware and firmware versions. Table 39 details these 3 different formats, and Table 40 explains the parts of the product code.

Table 39: Product code formats

Format	Structure
Product name	PPPP-TGVV(L)(F)
Ordering code	PPPP-TGVV(L)(F)-MMQ
Type number	PPPP-TGVV(L)(F)-MMQ-XX

Table 40: Part identification code

Code	Meaning	Example
PPPP	Form factor	LARA
TG	Platform (technology and generation) • Dominant technology: G = GSM, U = UMTS, C = CDMA, N = NB-IoT (LTE Cat NB1/NB2), R = LTE low data rate (Cat M1, Cat 1, Cat 1bis), L = LTE high data rate (Cat 3 and above) • Generation: 1…99	R6
VV	Variant function set based on the same platform: 00…99	40
(L)	LTE category (optionally indicated): 6,4,3,1,M …	1
(F)	Special features (optionally indicated): D = data only, …	D
MM	Major product version: 00…99	00
Q	Product grade: B = professional, A = automotive	B
XX	Minor product version: 00…99	00

8.3. Ordering information

Table 41: Product ordering codes

Ordering number	Product
LARA-R6001-00B	Global LTE FDD / TDD Cat 1 module with 3G and 2G fallback. Data and Voice product version. 26.0 x 24.0 x 2.6 mm, 150 pcs/reel
LARA-R6001-01B	Global LTE FDD / TDD Cat 1 module with 3G and 2G fallback. Data and Voice product version. Maintenance release. 26.0 x 24.0 x 2.6 mm, 150 pcs/reel
LARA-R6001D-00B	Global LTE FDD / TDD Cat 1 module with 3G and 2G fallback. Data-only product version. 26.0 x 24.0 x 2.6 mm, 150 pcs/reel
LARA-R6001D-01B	Global LTE FDD / TDD Cat 1 module with 3G and 2G fallback. Data-only product version. Maintenance release. 26.0 x 24.0 x 2.6 mm, 150 pcs/reel
LARA-R6401-00B	LTE FDD Cat 1 module for North America. Data and Voice product version. 26.0 x 24.0 x 2.6 mm, 150 pcs/reel
LARA-R6401-01B	LTE FDD Cat 1 module for North America. Data and Voice product version. Maintenance release. 26.0 x 24.0 x 2.6 mm, 150 pcs/reel
LARA-R6401D-00B	LTE FDD Cat 1 module for North America. Data-only product version. 26.0 x 24.0 x 2.6 mm, 150 pcs/reel
LARA-R6401D-01B	LTE FDD Cat 1 module for North America. Data-only product version. Maintenance release. 26.0 x 24.0 x 2.6 mm, 150 pcs/reel
LARA-R6801-00B	LTE FDD Cat 1 module with 3G and 2G fallback for multi-regional use. Data and Voice product version. 26.0 x 24.0 x 2.6 mm, 150 pcs/reel
LARA-R6801-01B	LTE FDD Cat 1 module with 3G and 2G fallback for multi-regional use. Data and Voice product version. Maintenance release. 26.0 x 24.0 x 2.6 mm, 150 pcs/reel
LARA-R6801D-01B	LTE FDD Cat 1 module with 3G and 2G fallback for multi-regional use. Data-only product version. 26.0 x 24.0 x 2.6 mm, 150 pcs/reel

Appendix

A Glossary

Abbreviation	Definition
2G	2nd Generation Cellular Technology (GSM, GPRS, EGPRS)
3G	3rd Generation Cellular Technology (UMTS, HSDPA, HSUPA)
3GPP	3rd Generation Partnership Project
8-PSK	8 Phase-Shift Keying modulation
ACMA	Australian Communications and Media Authority
ADC	Analog to Digital Converter
ANATEL	Agência Nacional de Telecomunicações - National Telecommunications Agency (Brazil)
APAC	Asia-Pacific
AT	AT Command Interpreter Software Subsystem, or attention
Cat	Category
CE	European Conformity
CSFB	Circuit-Switched Fall-Back
DL	Down-link (Reception)
DNS	Domain Name System
DTLS	Datagram Transport Layer Security
E2E	End-to-End
EAL5+	Evaluation Assurance Level 5+
eDRX	Extended Discontinuous Reception
EMEA	Europe, the Middle East and Africa
ERS	External Reset Input Signal
ESD	Electrostatic Discharge
FCC	Federal Communications Commission (United States)
FDD	Frequency Division Duplexing
FOAT	Firmware update Over AT commands
FOTA	Firmware update Over The Air
FTP	File Transfer Protocol
FW	Firmware
GCF	Global Certification Forum
GDI	Generic Digital Interfaces (power domain)
GITEKI	Gijutsu kijun tekigō shōmei - technical standard conformity certification (Japan)
GMSK	Gaussian Minimum-Shift Keying modulation
GND	Ground
GNSS	Global Navigation Satellite System
GPIO	General Purpose Input Output
HSDPA	High Speed Downlink Packet Access
HSUPA	High Speed Uplink Packet Access
HTTP	HyperText Transfer Protocol
I2C	Inter-Integrated Circuit Interface
I2S	Inter-IC Sound Interface
IEC	International Electrotechnical Commission
IMEI	International Mobile Equipment Identity
IMS	IP Multimedia Subsystem
IP	Internet Protocol

Abbreviation	Definition
ISED	Innovation, Science and Economic Development (Canada)
KC	Korea Certification
KMS	Key Management Service
LGA	Land Grid Array
LPWA	Low Power Wide Area
LTE	Long Term Evolution
LWM2M	Open Mobile Alliance Lightweight Machine-to-Machine protocol
MNO	Mobile Network Operator
MQTT	Message Queuing Telemetry Transport
MUX	Multiplexer
N/A	Not Applicable
NCC	National Communications Commission (Taiwan)
PA	Power Amplifier
PCB	Printed Circuit Board
PD	Pull-Down
PDP	Packet Data Protocol
POS	Power-On Input Signal
PMU	Power Management Unit
PSM	Power Saving Mode
PTCRB	PCS Type Certification Review Board
PU	Pull-Up
QPSK	Quadrature Phase-Shift Keying modulation
RAT	Radio Access Technology
RCM	Regulatory Compliance Mark
REST API	Representational State Transfer Application Programming Interface
RFC	Request for Comments
RMC	Reference Measurement Channel
RTC	Real Time Clock
Rx	Receiver
SIM	Subscriber Identification Module
TCP	Transmission Control Protocol
TDD	Time Division Duplexing
TEE	Trusted Execution Environment
TLS	Transport Layer Security
Tx	Transmitter
UART	Universal Asynchronous Receiver/Transmitter serial interface
UDP	User Datagram Protocol
uFOTA	Proprietary module firmware update Over The Air
UL	Up-link (Transmission)
UMTS	Universal Mobile Telecommunications System
USB	Universal Serial Bus
VoLTE	Voice over LTE

Related documentation

[1] LARA-R6 / LARA-L6 AT commands manual TRSC-21046719
[2] LARA-R6 series system integration manual TRSC-21010011
[3] Android RIL source code application note TRSC-13002041
[4] Package information user guide TRSC-14001652
[5] LARA-R6 series application development guide TRSC-22001850
[6] Positioning implementation application note TRSC-686885345-1826
[7] 3GPP TS 27.007 - AT command set for User Equipment (UE)
[8] 3GPP TS 27.005 - Use of Data Terminal Equipment - Data Circuit terminating Equipment (DTE - DCE) interface for Short Message Service (SMS) and Cell Broadcast Service (CBS)
[9] 3GPP TS 27.010 - Terminal Equipment to User Equipment (TE-UE) multiplexer protocol
[10] 3GPP TS 36.521-1 - Evolved Universal Terrestrial Radio Access; User Equipment conformance specification; radio transmission and reception; part 1: conformance testing
[11] 3GPP TS 34.121-1 - User Equipment conformance specification; radio transmission and reception (FDD); part 1: conformance specification
[12] 3GPP TS 51.010-1 - Mobile Station conformance specification; part 1: conformance specification
[13] ITU-T recommendation V24, 02-2000. List of definitions for interchange circuits between Data Terminal Equipment (DTE) and Data Connection Equipment (DCE)
[14] Universal Serial Bus specification, revision 2.0, https://www.usb.org/
[15] I2C-bus specification and user manual - UM10204 - NXP semiconductors, https://www.nxp.com/docs/en/user-guide/UM10204.pdf
[16] IEC 60079-0 - Explosive atmospheres, part 0: equipment general requirements
[17] IEC 60079-11 - Explosive atmospheres, part 11: equipment protection by intrinsic safety 'i'
[18] IEC 60079-26 - Explosive atmospheres, part 26: equipment with EPL Ga

Revision history

Revision	Date	Name	Comments
R01	29-Apr-2021	sses	Initial release
R02	21-Dec-2021	sses / psca	Added LARA-R6001D and LARA-R6401D data-only product variants. Updated LARA-R6001 and LARA-R6401 product status. Added current consumption and sensitivity values. Revised supported features. Updated VUSB_DET characteristics. Minor other editorial changes, corrections, and clarifications.
R03	18-Jan-2022	lpah	Updated disclosure restriction to C1-Public
R04	18-Feb-2022	sses	Updated LARA-R6001D and LARA-R6401D product status. Added reboot feature for RESET_N input. Clarifications in USB description. Added smart temperature supervisor details. Added features for GPIOs. Added parameters for ATEX applications. Minor other figures and clarifications added.
R05	21-Feb-2022	sses	Corrected position of a pad in mechanical description. Corrected ESD ratings.
R06	20-Apr-2022	sses	Updated LARA-R6001D product status. Added antenna dynamic tuner description. Added thermal parameters. Added clock output characteristics. Added AC characteristics of I2S pins. Added reels and tapes description. Revised certification info. Minor data and descriptions revised or added.
R07	11-May-2022	sses	Updated LARA-R6001, LARA-R6401 and LARA-R6801 product status. Minor data and descriptions added.

Revision	Date	Name	Comments
R08	08-Jul-2022	sses	Updated LARA-R6401D product status. Minor editorial changes and clarifications added.
R09	18-Aug-2022	sses	Updated LARA-R6001, LARA-R6401 and LARA-R6801 product status. Minor clarifications added.
R10	09-Feb-2023	sses	Extended document applicability to type numbers LARA-R6001-00B-01, LARA-R6001-01B-00, LARA-R6001D-00B-01, LARA-R6001D-01B-00, LARA-R6401-00B-01, LARA-R6401-01B-00, LARA-R6401D-00B-01, LARA-R6401D-01B-00, LARA-R6801-00B-01, LARA-R6801-01B-00 and LARA-R6801D-01B-00. Revised module dimension tolerance remark. Minor other editorial changes and clarifications added.
R11	06-Jul-2023	sses	Updated product status of type numbers LARA-R6001-00B-01, LARA-R6001D-00B-01, LARA-R6001D-01B-00, LARA-R6401-00B-01, LARA-R6401D-00B-01, LARA-R6801-00B-01, LARA-R6801-01B-00 and LARA-R6801D-01B-00. Added description of some features available with “01B” product versions: fastest emergency shutdown (AT+CFUN=11), configurable antenna tuner, Ethernet over USB, PSM consumption, module status indication over GPIOs, network status indication over additional GPIOs, I2S sample rate 48 kHz. Minor other clarifications.
R12	05-Oct-2023	sses	Updated product status of LARA-R6001-01B, LARA-R6001D-01B, LARA-R6401D-01B, LARA-R6801-01B and LARA-R6801D-01B. Minor clarifications.
R13	16-Feb-2024	sses	Updated product status of LARA-R6001-01B, LARA-R6001D-01B, LARA-R6401-01B, LARA-R6401D-01B, LARA-R6801-01B and LARA-R6801D-01B. Clarified ultra-low power PSM deep-sleep mode scenarios. Minor clarifications.
R14	19-Jun-2024	yatu	Updated product status of LARA-R6001-01B, LARA-R6001D-01B, LARA-R6401-01B, LARA-R6401D-01B, LARA-R6801-01B and LARA-R6801D-01B.
R15	12-Jun-2025	yatu / sses	Updated document template. Minor editorial changes and corrections
R16	01-Jul-2025	sses	Updated product status of LARA-R6001-00B-01, LARA-R6001D-00B-01, LARA-R6401-00B-01, LARA-R6401D-00B-01, LARA-R6801-00B-01 and LARA-R6801D-01B-00 to End of Life. Revised contact details. Minor editorial changes and clarifications.
R17	14-Jul-2025	sses	Added ANATEL for LARA-R6001-00B. Updated product status of LARA-R6001-00B-01, LARA-R6001D-00B-01, LARA-R6401-00B-01, LARA-R6401D-00B-01, LARA-R6801-00B-01 and LARA-R6801D-01B-00 to End of Life. Transposed Table 1. Revised contact details. Minor editorial changes and clarifications.
R18	18-Sep-2025	yatu	Updated product status of LARA-R6801D-01B-00 to Mass production.
R19	28-Oct-2025	sses	Added new FCC IDs and ISED Certification Numbers. Updated label illustrative examples. Minor editorial and template changes.

Contact details

For any questions on this document, please contact Trasna on:

Email: ts.cellular@trasna.io

Address:

Trasna Cellular S.p.A.
Via Stazione di Prosecco, 15
34010 Sgonico, Italy