FCC RADIO TEST REPORT
FCC ID: 2BS46-HCB25-PE

Product : HUUCH Box

Trade Mark : N/A

Model Name : HCB001

Family Model : N/A

Report No. : N25111200711E

Prepared for

Shenzhen Huchi Technology Co., Ltd.

Room 506, Zongtai Lukai Zhihuiyuan, Liuxian 2nd Road, Bao'an District, Shenzhen,Guangdong, China

Prepared by

Shenzhen NTEK Testing Technology Co., Ltd.

No. 24 Xinfa East Road, Xiangshan Community, Xinqiao Street, Baoan District, Shenzhen, Guangdong, People's Republic of China

Tel. 0755-23200050 Website: http://www.ntek.org.cn

TEST RESULT CERTIFICATION

Applicant's name ..... : Shenzhen Huchi Technology Co., Ltd.

Address ..... : Room 506, Zongtai Lukai Zhihuiyuan, Liuxian 2nd Road, Bao'an District, Shenzhen,Guangdong, China

Manufacturer's Name..... : Shenzhen Huchi Technology Co., Ltd.

Address ..... : Room 506, Zongtai Lukai Zhihuiyuan, Liuxian 2nd Road, Bao'an District, Shenzhen,Guangdong, China

Product description

Product name..... : HUUCH Box

Model and/or type reference : HCB001

Family Model..... : N/A

Sample number S2511120078-1#

Standards ..... : FCC Part15.407

Test procedure ..... ANSI C63.10-2020 and KDB 789033 D02 General UNII Test Procedures New Rules v02r01

This device described above has been tested by NTEK, and the test results show that the equipment under test (EUT) is in compliance with the FCC requirements/ the Industry Canada requirements.. And it is applicable only to the tested sample identified in the report.

This report shall not be reproduced except in full, without the written approval of NTEK, this document may be altered or revised by NTEK, personnel only, and shall be noted in the revision of the document.

Date of Test .....

Date (s) of performance of tests..... Nov. 12, 2025 ~ Dec. 15, 2025

Date of Issue..... Dec. 15, 2025

Test Result..... **Pass**

Prepared By :	Reviewed By :	Approved By :
Abel Chen	Aaron Cheng	Alex Li
Abel Chen	Aaron Cheng	Alex Li
(Project Engineer)	(Supervisor)	(Manager)

Table of Contents

	Page
1 . SUMMARY OF TEST RESULTS	5
1.1 FACILITIES AND ACCREDITATIONS	6
1.2 MEASUREMENT UNCERTAINTY	6
2 . GENERAL INFORMATION	7
2.1 GENERAL DESCRIPTION OF EUT	7
2.2 DESCRIPTION OF TEST MODES	9
2.3 BLOCK DIGRAM SHOWING THE CONFIGURATION OF SYSTEM TESTED	10
2.4 DESCRIPTION OF SUPPORT UNITS(CONDUCTED MODE)	11
2.5 EQUIPMENTS LIST FOR ALL TEST ITEMS	12
3 . TEST REQUIREMENTS	14
3.1 CONDUCTED EMISSION MEASUREMENT	14
3.2 RADIATED EMISSION MEASUREMENT	17
3.3 POWER SPECTRAL DENSITY TEST	26
3.4 26DB & 99% EMISSION BANDWIDTH	29
3.5 MINIMUM 6 DB BANDWIDTH	31
3.6 MAXIMUM CONDUCTED OUTPUT POWER	33
3.7 OUT OF BAND EMISSIONS	37
3.8 SPURIOUS RF CONDUCTED EMISSIONS	39
3.9 FREQUENCY STABILITY MEASUREMENT	40
4. ANTENNA REQUIREMENT	44
4.1 STANDARD REQUIREMENT	44
4.2 EUT ANTENNA	44

Revision History

Report No.	Version	Description	Issued Date
N25111200711E	Rev.01	Initial issue of report	Dec.15, 2025

1. SUMMARY OF TEST RESULTS

Test procedures according to the technical standards:

FCC Part15 (15.407) , Subpart E			
Standard Section	Test Item	Judgment	Remark
15.207	AC Power Line Conducted Emissions	PASS	
15.209(a), 15.407 (b)(1) 15.407 (b)(4)	Spurious Radiated Emissions	PASS	
15.407 (a)(1) 15.407 (a)(3)	99% Emission Bandwidth	PASS	
15.407(e)	Minimum 6 dB bandwidth	PASS	
15.407 (a)(1) 15.407 (a)(3)	Maximum Conducted Output Power	PASS	
15.407(b)(1) 15.407(b)(4)	Band Edge	PASS	
15.407 (a)(1) 15.407 (a)(3)	Power Spectral Density	PASS	
15.407(b)	Spurious Emissions at Antenna Terminals	PASS	
15.203	Antenna Requirement	PASS	
15.407(c)	Automatically discontinue transmission	PASS	

NOTE:

(1)" N/A" denotes test is not applicable in this Test Report

1.1 FACILITIES AND ACCREDITATIONS

FACILITIES

All measurement facilities used to collect the measurement data are located at No. 24 Xinfa East Road, Xiangshan Community, Xinqiao Street, Baoan District, Shenzhen, Guangdong, People's Republic of China.

The sites are constructed in conformance with the requirements of ANSI C63.7, ANSI C63.10 and CISPR Publication 22.

LABORATORY ACCREDITATIONS AND LISTINGS

Site Description

CNAS-Lab.	:	The Certificate Registration Number is L5516.
IC-Registration		The Certificate Registration Number is 9270A. CAB identifier:CN0074
FCC- Accredited		Test Firm Registration Number: 463705. Designation Number: CN1184
A2LA-Lab.		The Certificate Registration Number is 4298.01 This laboratory is accredited in accordance with the recognized International Standard ISO/IEC 17025:2005 General requirements for the competence of testing and calibration laboratories. This accreditation demonstrates technical competence for a defined scope and the operation of a laboratory quality management system (refer to joint ISO-ILAC-IAF Communiqué dated 8 January 2009).
Name of Firm	:	Shenzhen NTEK Testing Technology Co., Ltd.
Site Location	:	No. 24 Xinfa East Road, Xiangshan Community, Xinqiao Street, Baoan District, Shenzhen, Guangdong, People's Republic of China.

1.2 MEASUREMENT UNCERTAINTY

The reported uncertainty of measurement y±U, where expended uncertainty U is based on a standard uncertainty multiplied by a coverage factor of k=2, providing a level of confidence of approximately 95 %.

No.	Item	Uncertainty
1	Conducted Emission Test	±2.80dB
2	RF power, conducted	±0.16dB
3	Spurious emissions, conducted	±0.21dB
4	All emissions, radiated(30MHz~1GHz)	±2.64dB
5	All emissions, radiated(1GHz~6GHz)	±2.40dB
6	All emissions, radiated(> 6GHz)	±2.52dB
7	Temperature	±0.5°C
8	Humidity	±2%
9	All emissions, radiated(9KHz~30MHz)	±6dB

2. GENERAL INFORMATION

2.1 GENERAL DESCRIPTION OF EUT

Equipment	HUUCH Box	
Trade Mark	N/A	
Model Name	HCB001	
Family Model	N/A	
Model Difference	N/A	
FCC ID	2BS46-HCB25-PE	
Product Description	IEEE 802.11 WLAN Mode Supported	☒802.11a/n/ac (20MHz channel bandwidth) ☒802.11n/ac (40MHz channel bandwidth) ☒802.11ac (80MHz channel bandwidth)
	Data Rate	802.11a: 6,9,12,18,24,36,48,54Mbps; 802.11n(HT20/HT40):MCS0-MCS15; 802.11ac(VHT20):MCS0-MCS8; 802.11ac(VHT40/VHT80):MCS0-MCS9;
	Modulation	OFDM with BPSK/QPSK/16QAM/64QAM/256QAM for 802.11a/n/ac;
	Operating Frequency Range	☒5745-5825 MHz for 802.11a/n(HT20)/ac(VHT20); 5755-5795 MHz for 802.11n(HT40)/ac(VHT40); 5775MHz for 802.11ac(VHT80)
	Number of Channels	☒5 channels for 802.11a/n20/ac20 in the 5745-5825MHz band ; 2 channels for 802.11 n40/ac40 in the 5755-5795MHz band ; 1 channels for 802.11 ac80 in the 5775MHz band ;
	Antenna Type	FPC Antenna
	Antenna Gain	3.16dBi
	Based on the application, features, or specification exhibited in User's Manual, More details of EUT technical specification, please refer to the User's Manual.	
Adapter	Model: GQ24-120200-BU Input: 100-240V~50/60Hz 1.0A MAX Output: 12.0V/2A	
Battery	N/A	
Power supply	DC 12V from adapter	
Connecting I/O Port(s)	Please refer to the User's Manual	
HW Version	V1.00	
FW Version	V10.00.14_202509261207_U	
SW Version	N/A	

Note:

1. For a more detailed features description, please refer to the manufacturer's specifications or the User's Manual.
2. Frequency and Channel list for 802.11a/n/ac(20 MHz) band IV (5745-5825MHz):

802.11a/n/ac(20 MHz) Carrier Frequency Channel							
Channel	Frequency (MHz)	Channel	Frequency (MHz)	Channel	Frequency (MHz)	Channel	Frequency (MHz)
149	5745	153	5765	157	5785	161	5805
165	5825	-	-	-	-	-	-

Frequency and Channel list for 802.11n/ac(40MHz) band IV (5755-5795MHz):

802.11n/ac(40MHz) Carrier Frequency Channel					
Channel	Frequency (MHz)	Channel	Frequency (MHz)	Channel	Frequency (MHz)
151	5755	159	5795	-	-

Frequency and Channel list for 802.11ac(80MHz) band IV (5775MHz):

802.11ac(80MHz) Carrier Frequency Channel					
Channel	Frequency (MHz)	Channel	Frequency (MHz)	Channel	Frequency (MHz)
155	5775			-	-

2.2 DESCRIPTION OF TEST MODES

To investigate the maximum EMI emission characteristics generates from EUT, the test system was pre-scanning tested base on the consideration of following EUT operation mode or test configuration mode which possible have effect on EMI emission level. Each of these EUT operation mode(s) or test configuration mode(s) mentioned above was evaluated respectively.

Pretest Mode	Description
Mode 1	Normal Link Mode
Mode 2	802.11a / n 20 / ac 20 CH149/ CH157/ CH 165
Mode 3	802.11n 40 / ac 40 CH 151 / CH 159
Mode 4	802.11ac 80 CH 155

For Radiated Emission	
Final Test Mode	Description
Mode 1	Normal Link Mode
Mode 2	802.11a / n 20 / ac 20 CH149/ CH157/ CH 165
Mode 3	802.11n 40 / ac 40 CH 151 / CH 159
Mode 4	802.11ac 80 CH 155

Note:

(1) The measurements are performed at the highest, middle, lowest available channels.

(2) The measurements are performed at all Bit Rate of Transmitter, the worst data was reported

2.3 BLOCK DIGRAM SHOWING THE CONFIGURATION OF SYSTEM TESTED

For AC Conducted Emission Mode

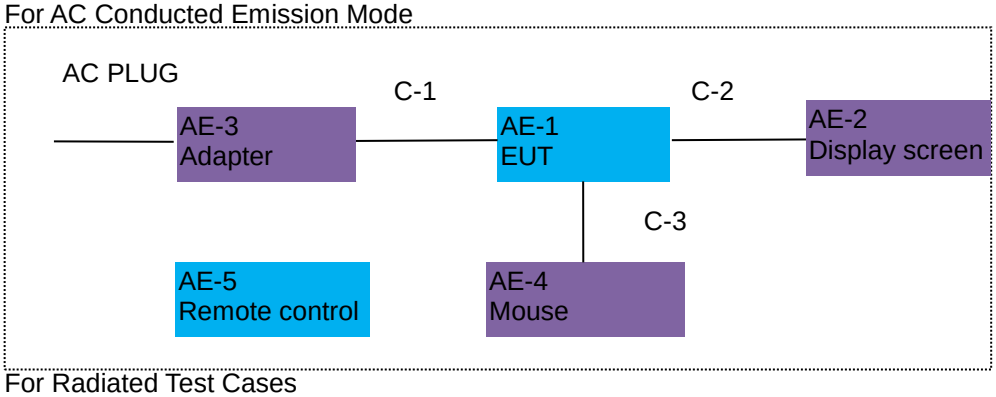

For Radiated Test Cases

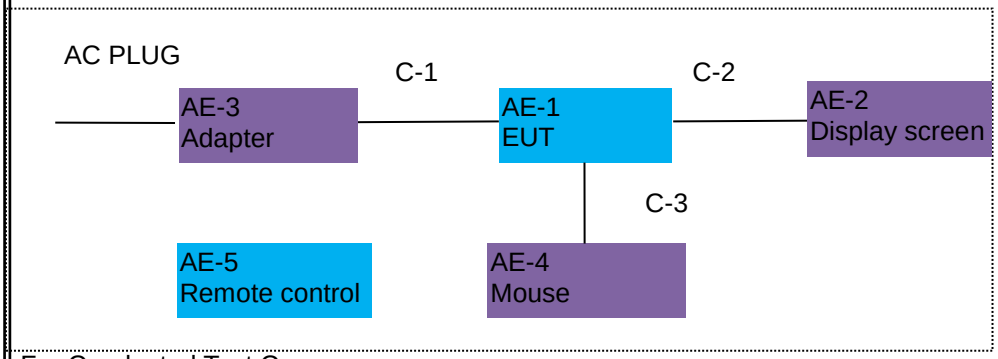

For Conducted Test Cases

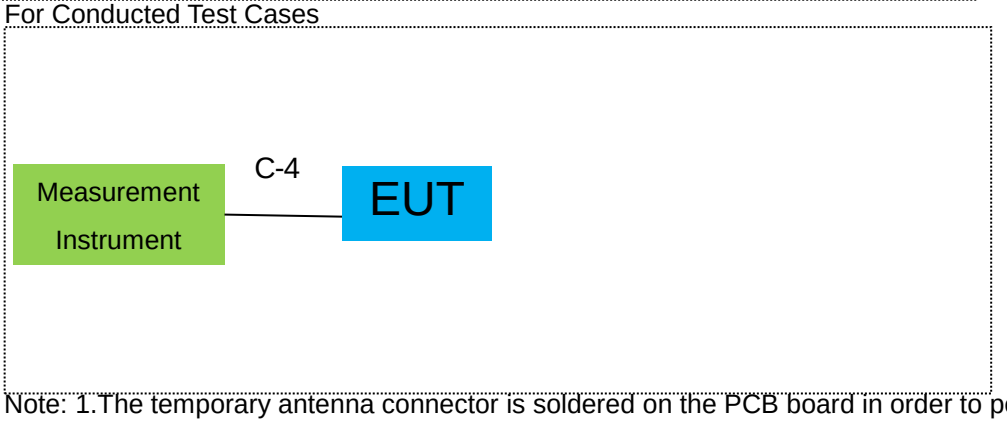

Note: 1.The temporary antenna connector is soldered on the PCB board in order to perform conducted tests and this temporary antenna connector is listed in the equipment list.
2. EUT built-in battery-powered, the battery is fully-charged.

2.4 DESCRIPTION OF SUPPORT UNITS(CONDUCTED MODE)

The EUT has been tested as an independent unit together with other necessary accessories or support units. The following support units or accessories were used to form a representative test configuration during the tests.

Item	Equipment	Model/Type No.	Series No.	Note
AE-1	HUUCH Box	HCB001	N/A	EUT
AE-2	Display screen	N/A	N/A	Peripherals
AE-3	Adapter	N/A	N/A	Peripherals
AE-4	Mouse	N/A	N/A	Peripherals
AE-5	Remote control	HCH001	N/A	Peripherals

Item	Cable Type	Shielded Type	Ferrite Core	Length
C-1	DC power Cable	NO	NO	1.0m
C-2	HDMI Cable	NO	NO	1.5m
C-3	Mouse Cable	NO	NO	1.0m
C-4	RF Cable	YES	NO	0.1m

Note:

(1) The support equipment was authorized by Declaration of Confirmation.

(2) For detachable type I/O cable should be specified the length in cm in 『Length』 column.

2.5 EQUIPMENTS LIST FOR ALL TEST ITEMS

Radiation& Conducted Test equipment

Item	Kind of Equipment	Manufacturer	Type No.	Serial No.	Last calibration	Calibrated until	Calibration period
1	Spectrum Analyzer	Agilent	E4440A	MY41000130	2025.04.24	2026.04.23	1 year
2	Spectrum Analyzer	Agilent	N9020A	MY49100060	2025.04.17	2026.04.16	1 year
3	Spectrum Analyzer	R&S	FSV40	101417	2025.04.17	2026.04.16	1 year
4	Test Receiver	R&S	ESPI7	101318	2025.04.17	2026.04.16	1 year
5	Bilog Antenna	TESEQ	CBL6111D	31216	2025.04.17	2026.04.16	1 year
6	50Ω Coaxial Switch	Anritsu	MP59B	6200983705	2024.04.26	2027.04.25	3 year
7	Horn Antenna	EM	EM-AH-10180	2011071402	2024.05.12	2027.05.11	3 year
8	Broadband Horn Antenna	SCHWARZBECK	BBHA 9170	803	2024.05.12	2027.05.11	3 year
9	Amplifier	EMC	EMC051835SE	980246	2025.04.17	2026.04.16	1 year
10	Active Loop Antenna	SCHWARZBECK	FMZB 1519 B	055	2024.05.17	2027.05.16	3 year
11	Power Meter	DARE	RPR3006W	15I00041SNO84	2025.04.17	2026.04.16	1 year
12	Test Cable (9KHz-30MHz)	N/A	R-01	N/A	2023.05.06	2026.05.05	3 year
13	Test Cable (30MHz-1GHz)	N/A	R-02	N/A	2023.05.06	2026.05.05	3 year
14	High Test Cable(1G-40GHz)	N/A	R-03	N/A	2023.05.06	2026.05.05	3 year
15	Filter	TRILTHIC	2400MHz	29	2024.04.26	2027.04.25	3 year
16	temporary antenna connector (Note)	NTS	R001	N/A	N/A	N/A	N/A

Note:
We will use the temporary antenna connector (soldered on the PCB board) When conducted test
And this temporary antenna connector is listed within the instrument list

AC Conduction Test equipment

Item	Kind of Equipment	Manufacturer	Type No.	Serial No.	Last calibration	Calibrated until	Calibration period
1	Test Receiver	R&S	ESCI	101160	2025.04.17	2026.04.16	1 year
2	LISN	R&S	ENV216	101313	2025.04.16	2026.04.15	1 year
3	LISN	SCHWARZBECK	NNLK 8129	8129245	2025.04.16	2026.04.15	1 year
4	50Ω Coaxial Switch	ANRITSU CORP	MP59B	6200983704	2024.04.26	2027.04.25	3 year
5	Test Cable (9KHz-30MHz)	N/A	C01	N/A	2023.05.06	2026.05.05	3 year
6	Test Cable (9KHz-30MHz)	N/A	C02	N/A	2023.05.06	2026.05.05	3 year
7	Test Cable (9KHz-30MHz)	N/A	C03	N/A	2023.05.06	2026.05.05	3 year

Note: Each piece of equipment is scheduled for calibration once a year except the Test Cable& Aux Equipment which is scheduled for calibration every 3 years.

Measurement Software

Item	Manufacturer	Software Name	Software Version	Description
1	MWRFtest	MTS 8310 2.4GHz/5GHz	2.0	RF Conducted Test
2	Farad	EZ-EMC_RE	AIT-03A	RadiatedTest
3	Farad	EZ-EMC_CE	AIT-03A	AC Conducted Test

3. TEST REQUIREMENTS

3.1CONDUCTED EMISSION MEASUREMENT

3.1.1 APPLICABLE STANDARD

According to FCC Part 15.207(a)

3.1.2 CONFORMANCE LIMIT

Frequency(MHz)	Conducted Emission Limit	
	Quasi-peak	Average
0.15-0.5	66-56*	56-46*
0.5-5.0	56	46
5.0-30.0	60	50

Note: 1. *Decreases with the logarithm of the frequency
2. The lower limit shall apply at the transition frequencies
3. The limit decreases in line with the logarithm of the frequency in the range of 0.15 to 0.50MHz.

3.1.3 TEST CONFIGURATION

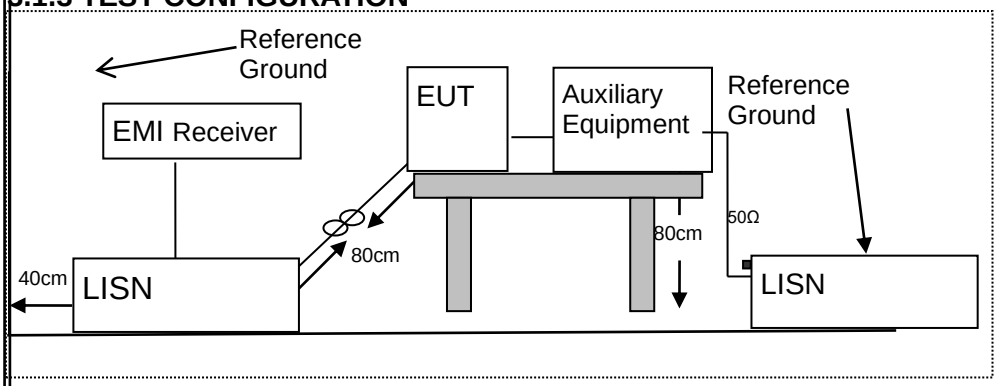

3.1.4 TEST PROCEDURE

According to the requirements in Section 13.1.4.1 of ANSI C63.10-2020 Conducted emissions the EUT measured in the frequency range between 0.15 MHz and 30 MHz using CISPR Quasi-Peak and average detector mode.

1. The EUT was placed 0.4 meter from the conducting wall of the shielding room.
2. The EUT was placed on a table which is 0.8m above ground plane.
3. Connect EUT to the power mains through a line impedance stabilization network (LISN). All other support equipments powered from additional LISN(s). The LISN provide 50 Ohm/ 50uH of coupling impedance for the measuring instrument.
4. Interconnecting cables that hang closer than 40 cm to the ground plane shall be folded back and forth in the center forming a bundle 30 to 40cm long.
5. I/O cables that are not connected to a peripheral shall be bundled in the center. The end of the cable may be terminated, if required, using the correct terminating impedance. The overall length shall not exceed 1 m.
6. LISN at least 80 cm from nearest part of EUT chassis.
7. The frequency range from 150KHz to 30MHz was searched.
8. Set the test-receiver system to Peak Detect Function and specified bandwidth(IF bandwidth=9KHz) with Maximum Hold Mode
9. For the actual test configuration, please refer to the related Item –EUT Test Photos.

3.1.5 TEST RESULTS

EUT :	HUUCH Box	Model Name :	HCB001
Temperature :	24.3℃	Relative Humidity :	45.3%
Pressure :	1010hPa	Phase :	L
Test Voltage :	DC 12V from Adapter AC 120V/60Hz	Test Mode :	Mode 1

Frequency (MHz)	Reading Level (dBμV)	Correct Factor (dB)	Measure-ment (dBμV)	Limits (dBμV)	Margin (dB)	Remark
0.3620	9.06	19.49	28.55	58.68	-30.13	QP
0.3620	-2.87	19.49	16.62	48.68	-32.06	AVG
0.5740	22.92	19.50	42.42	56.00	-13.58	QP
0.5740	4.95	19.50	24.45	46.00	-21.55	AVG
1.2500	6.65	19.52	26.17	56.00	-29.83	QP
1.2500	-3.95	19.52	15.57	46.00	-30.43	AVG
2.4300	7.42	19.54	26.96	56.00	-29.04	QP
2.4300	-4.83	19.54	14.71	46.00	-31.29	AVG
8.2460	8.11	19.63	27.74	60.00	-32.26	QP
8.2460	-3.23	19.63	16.40	50.00	-33.60	AVG
13.6737	16.45	19.85	36.30	60.00	-23.70	QP
13.6737	5.42	19.85	25.27	50.00	-24.73	AVG

Remark:
1. All readings are Quasi-Peak and Average values.
2. Factor = Insertion Loss + Cable Loss.

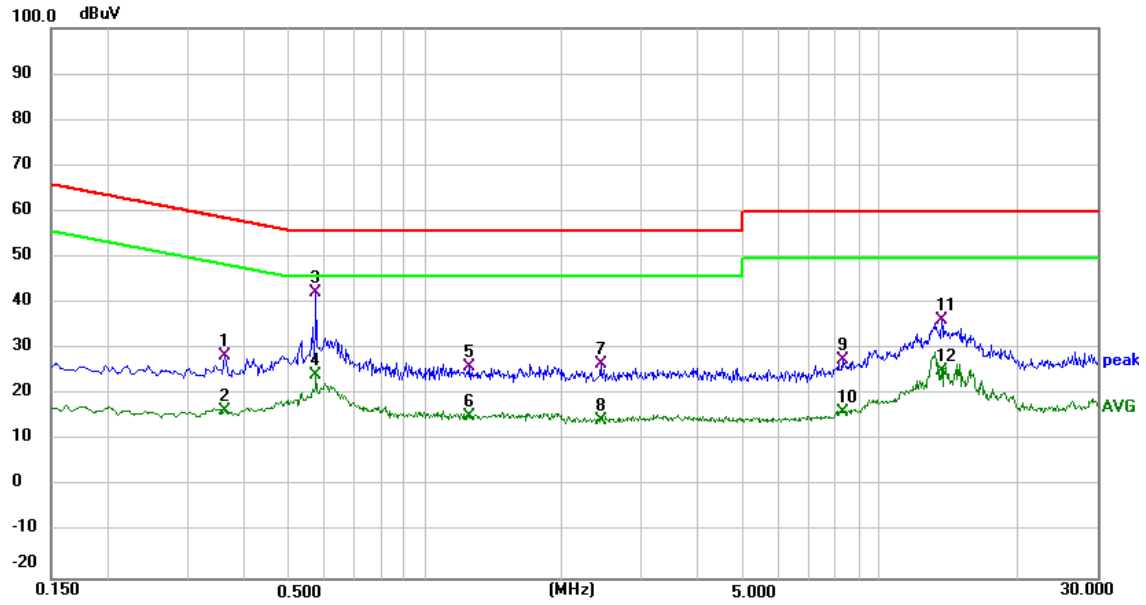

EUT：	HUUCH Box	Model Name ：	HCB001
Temperature：	24.3℃	Relative Humidity：	45.3%
Pressure：	1010hPa	Phase：	N
Test Voltage ：	DC 12V from Adapter AC 120V/60Hz	Test Mode：	Mode 1

Frequency (MHz)	Reading Level (dBμV)	Correct Factor (dB)	Measure-ment (dBμV)	Limits (dBμV)	Margin (dB)	Remark
0.3500	9.22	19.48	28.70	58.96	-30.26	QP
0.3500	-2.23	19.48	17.25	48.96	-31.71	AVG
0.5860	19.61	19.53	39.14	56.00	-16.86	QP
0.5860	5.40	19.53	24.93	46.00	-21.07	AVG
1.5300	7.30	19.50	26.80	56.00	-29.20	QP
1.5300	-4.15	19.50	15.35	46.00	-30.65	AVG
4.3859	6.85	19.58	26.43	56.00	-29.57	QP
4.3859	-4.74	19.58	14.84	46.00	-31.16	AVG
10.7100	10.77	19.68	30.45	60.00	-29.55	QP
10.7100	-0.39	19.68	19.29	50.00	-30.71	AVG
13.0540	14.71	19.84	34.55	60.00	-25.45	QP
13.0540	7.19	19.84	27.03	50.00	-22.97	AVG

Remark:
1. All readings are Quasi-Peak and Average values.
2. Factor = Insertion Loss + Cable Loss.

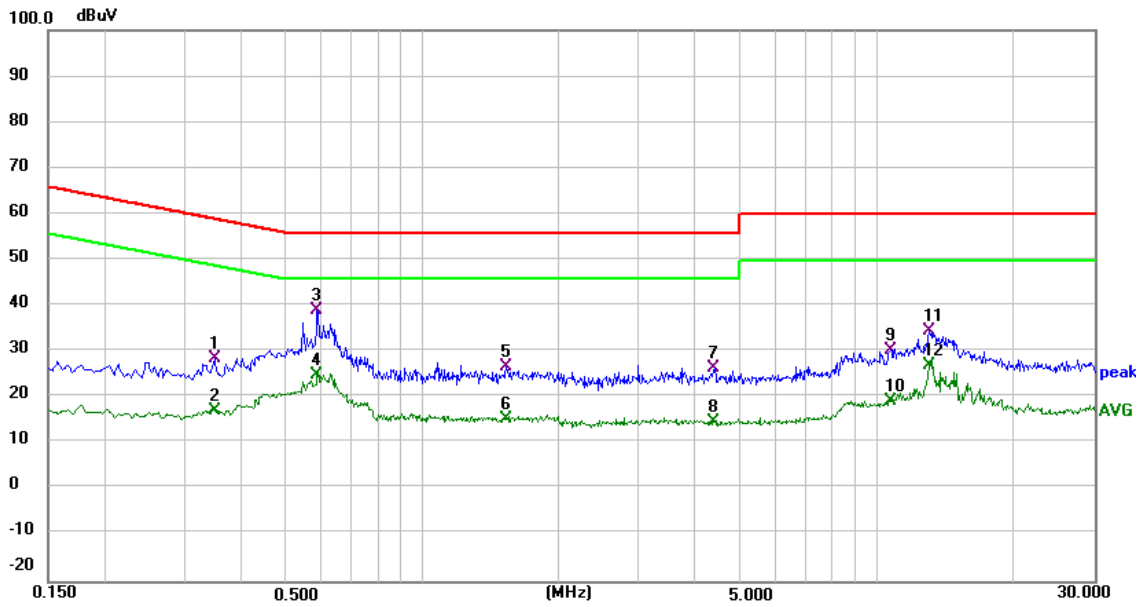

3.2 RADIATED EMISSION MEASUREMENT

3.2.1 APPLICABLE STANDARD

According to FCC Part 15.407(b) and 15.209

3.2.2 CONFORMANCE LIMIT

According to FCC Part 15.407(b)(7): radiated emissions which fall in the restricted bands, as defined in §15.205(a), must also comply with the radiated emission limits specified in §15.209(a) (see §15.205(c)).

According to FCC Part15.205, Restricted bands

MHz	MHz	MHz	GHz
0.090-0.110	16.42-16.423	399.9-410	4.5-5.15
0.495-0.505	16.69475-16.69525	608-614	5.35-5.46
2.1735-2.1905	16.80425-16.80475	960-1240	7.25-7.75
4.125-4.128	25.5-25.67	1300-1427	8.025-8.5
4.17725-4.17775	37.5-38.25	1435-1626.5	9.0-9.2
4.20725-4.20775	73-74.6	1645.5-1646.5	9.3-9.5
6.215-6.218	74.8-75.2	1660-1710	10.6-12.7
6.26775-6.26825	123-138	2200-2300	14.47-14.5
8.291-8.294	149.9-150.05	2310-2390	15.35-16.2
8.362-8.366	156.52475-156.52525	2483.5-2500	17.7-21.4
8.37625-8.38675	156.7-156.9	2690-2900	22.01-23.12
8.41425-8.41475	162.0125-167.17	3260-3267	23.6-24.0
12.29-12.293	167.72-173.2	3332-3339	31.2-31.8
12.51975-12.52025	240-285	3345.8-3358	36.43-36.5
12.57675-12.57725	322-335.4	3600-4400	(2)
13.36-13.41			

20dBc in any 100 kHz bandwidth outside the operating frequency band. In case the emission fall within the restricted band specified on 15.205(a), then the 15.209(a) limit in the table below has to be followed.

Restricted Frequency(MHz)	Field Strength (μV/m)	Field Strength (dBμV/m)	Measurement Distance
0.009~0.490	2400/F(KHz)	20 log (uV/m)	300
0.490~1.705	24000/F(KHz)	20 log (uV/m)	30
1.705~30.0	30	29.5	30
30-88	100	40	3
88-216	150	43.5	3
216-960	200	46	3
Above 960	500	54	3

Limits of Radiated Emission Measurement(Above 1000MHz)

Frequency(MHz)	Class B (dBuV/m) (at 3M)	
	PEAK	AVERAGE
Above 1000	74	54

Remark :1. Emission level in dBuV/m=20 log (uV/m)
2. Measurement was performed at an antenna to the closed point of EUT distance of meters.
3. For Frequency 9kHz~30MHz:
Distance extrapolation factor =40log(Specific distance/ test distance)(dB);
Limit line=Specific limits(dBuV) + distance extrapolation factor.
For Frequency above 30MHz:
Distance extrapolation factor =20log(Specific distance/ test distance)(dB);
Limit line=Specific limits(dBuV) + distance extrapolation factor.

3.2.3 MEASURING INSTRUMENTS

The Measuring equipment is listed in the section 6.3 of this test report.

3.2.4 TEST CONFIGURATION

(a) For radiated emissions below 30MHz

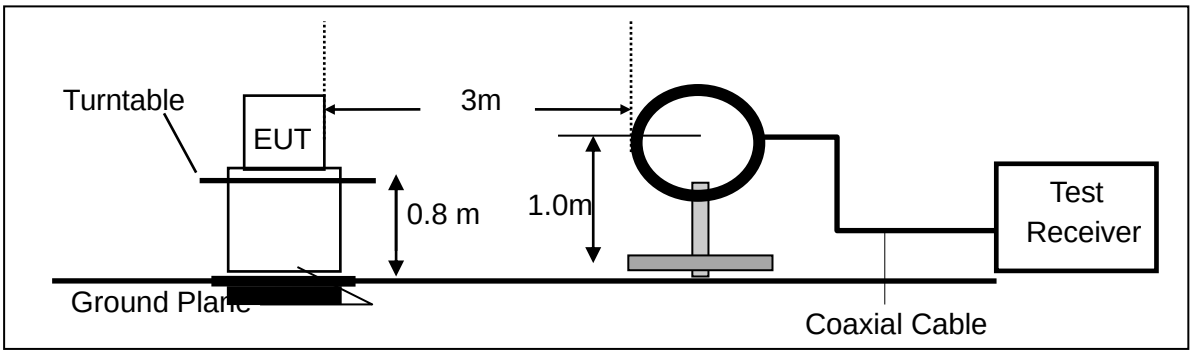

(b) For radiated emissions from 30MHz to 1000MHz

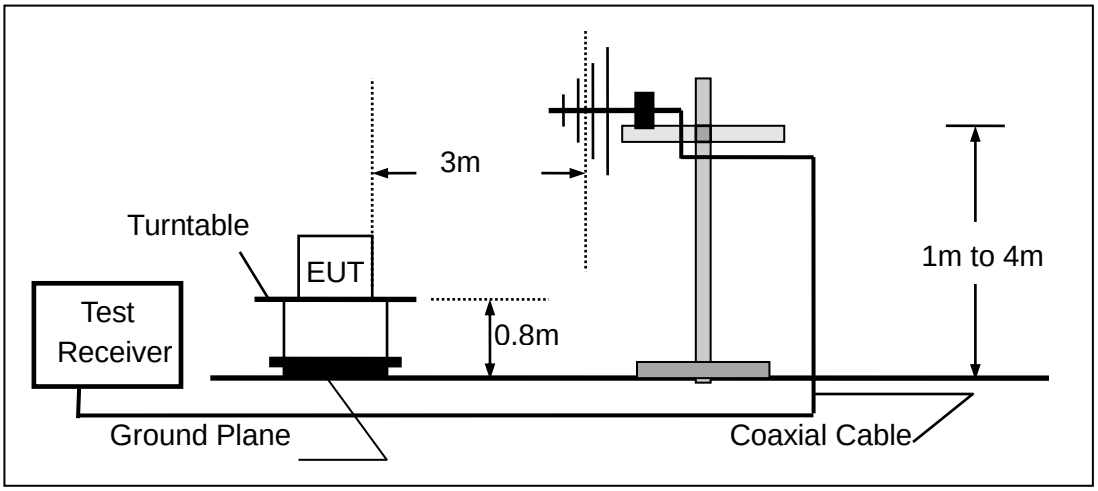

(c) For radiated emissions above 1000MHz

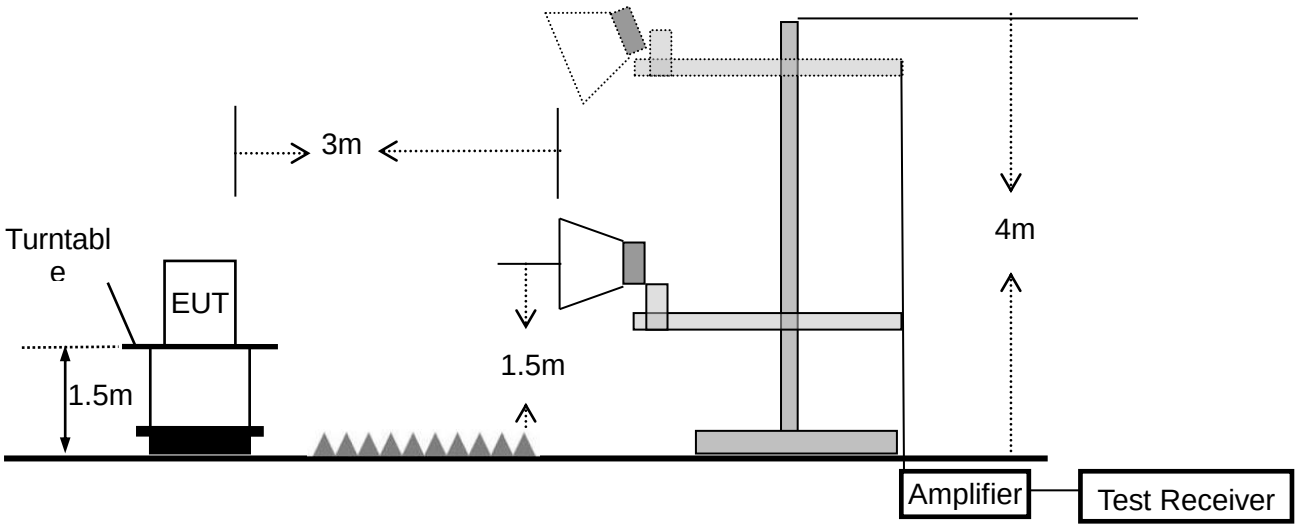

3.2.5 TEST PROCEDURE

The test site semi-anechoic chamber has met the requirement of NSA tolerance 4 dB according to the standards: ANSI C63.10-2020. The test distance is 3m.The setup is according to the requirements in Section 13.1.4.1 of ANSI C63.10-2020 and CAN/CSA-CEI/IEC CISPR 22.
This test is required for any spurious emission that falls in a Restricted Band, as defined in Section 15.205. It must be performed with the highest gain of each type of antenna proposed for use with the EUT.
Use the following spectrum analyzer settings:

Spectrum Parameter	Setting
Attenuation	Auto
Start Frequency	1000 MHz
Stop Frequency	10th carrier harmonic
RB / VB (emission in restricted band)	1 MHz / 1 MHz for Peak, 1 MHz / 1MHz for Average

Receiver Parameter	Setting
Attenuation	Auto
Start ~ Stop Frequency	9kHz~150kHz / RB 200Hz for QP
Start ~ Stop Frequency	150kHz~30MHz / RB 9kHz for QP
Start ~ Stop Frequency	30MHz~1000MHz / RB 120kHz for QP

a. The measuring distance of at 3 m shall be used for measurements at frequency up to 1GHz. For frequencies above 1GHz, any suitable measuring distance may be used.
b. The EUT was placed on the top of a rotating table 0.8 m for below 1GHz and 1.5m for above 1GHz the ground at a 3 meter. The table was rotated 360 degrees to determine the position of the highest radiation.
c. The height of the equipment or of the substitution antenna shall be 0.8 m for below 1GHz and 1.5m for above 1GHz; the height of the test antenna shall vary between 1 m to 4 m. Both horizontal and vertical polarizations of the antenna are set to make the measurement.
d. The initial step in collecting conducted emission data is a spectrum analyzer peak detector mode pre-scanning the measurement frequency range. Significant peaks are then marked and then Quasi Peak detector mode re-measured.
e. If the Peak Mode measured value compliance with and lower than Quasi Peak Mode Limit, the EUT shall be deemed to meet QP Limits and then no additional QP Mode measurement performed.
f. For the actual test configuration, please refer to the related Item –EUT Test Photos.

Note:

Both horizontal and vertical antenna polarities were tested
and performed pretest to three orthogonal axis. The worst case emissions were reported

During the radiated emission test, the Spectrum Analyzer was set with the following configurations:

Frequency Band (MHz)	Function	Resolution bandwidth	Video Bandwidth
30 to 1000	QP	120 kHz	300 kHz
Above 1000	Peak	1 MHz	1 MHz
	Average	1 MHz	1 MHz

Note: for the frequency ranges below 30 MHz, a narrower RBW is used for these ranges but the measured value should add a RBW correction factor (RBWCF) where RBWCF [dB] =10*lg(100 [kHz]/narrower RBW [kHz]). , the narrower RBW is 1 kHz and RBWCF is 20 dB for the frequency 9 kHz to 150 kHz, and the narrower RBW is 10 kHz and RBWCF is 10 dB for the frequency 150 kHz to 30 MHz.

3.2.6 TEST RESULTS (9KHz – 30 MHz)

EUT：	HUUCH Box	Model Name. :	HCB001
Temperature：	20 ℃	Relative Humidtity：	48%
Pressure：	1010 hPa	Test Voltage ：	DC 12V from Adapter AC 120V/60Hz
Test Mode ：	TX	Polarization :	--

Freq.	Reading	Limit	Margin	State
(MHz)	(dBuV/m)	(dBuV/m)	(dB)	P/F
--	--	--	--	N/A
--	--	--	--	N/A

NOTE:

The amplitude of spurious emissions which are attenuated by more than 20dB below the permissible value has no need to be reported.

3.2.7 TEST RESULTS (30MHz – 1GHz)

EUT :	HUUCH Box	Model Name. :	HCB001
Temperature :	25.2℃	Relative Humidity :	51%
Pressure :	1010 hPa	Test Voltage :	DC 12V from Adapter AC 120V/60Hz
Test Mode :	802.11n20 5745		

Polar (H/V)	Frequency (MHz)	Meter Reading (dBuV)	Factor (dB)	Emission Level (dBuV/m)	Limits (dBuV/m)	Margin (dB)	Remark
V	67.4381	18.73	16.92	35.65	40.00	-4.35	QP
V	105.6414	19.67	18.07	37.74	43.50	-5.76	QP
V	239.1470	16.01	18.69	34.70	46.00	-11.30	QP
V	403.2500	12.62	22.40	35.02	46.00	-10.98	QP
V	560.6928	10.08	25.18	35.26	46.00	-10.74	QP
V	893.8564	10.12	29.90	40.02	46.00	-5.98	QP

Remark:
Emission Level = Meter Reading + Factor, Margin= Emission Level - Limit

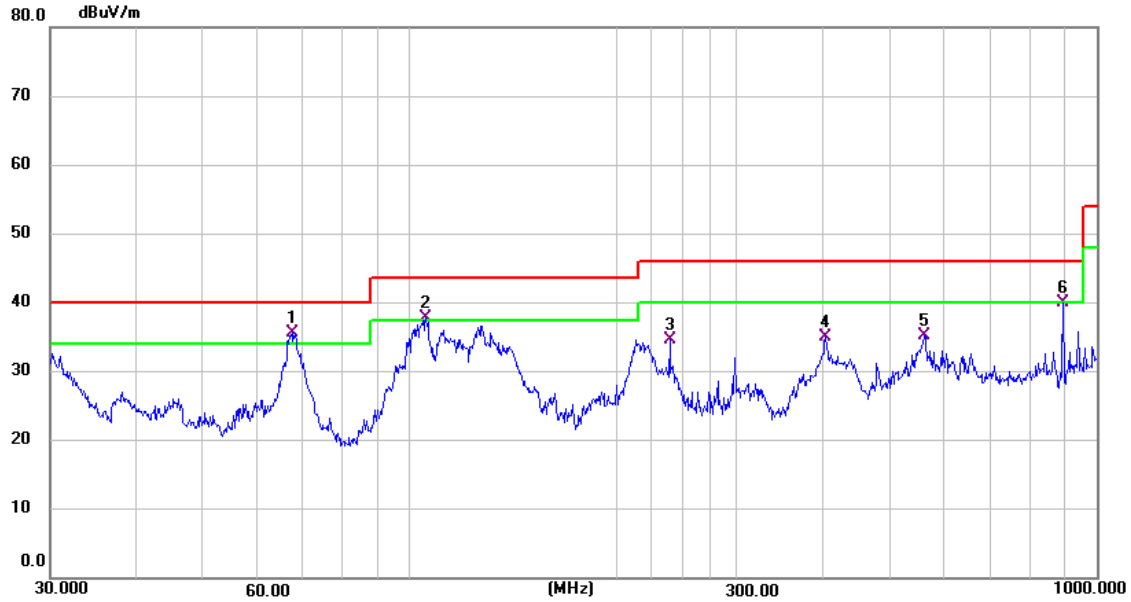

Polar (H/V)	Frequency (MHz)	Meter Reading (dBuV)	Factor (dB)	Emission Level (dBuV/m)	Limits (dBuV/m)	Margin (dB)	Remark
H	67.6751	14.32	16.89	31.21	40.00	-8.79	QP
H	111.3468	19.26	17.74	37.00	43.50	-6.50	QP
H	213.7632	17.78	18.02	35.80	43.50	-7.70	QP
H	297.2240	19.46	20.05	39.51	46.00	-6.49	QP
H	403.2500	15.49	22.40	37.89	46.00	-8.11	QP
H	893.8564	10.30	29.90	40.20	46.00	-5.80	QP

Remark:

Emission Level = Meter Reading + Factor, Margin= Emission Level - Limit

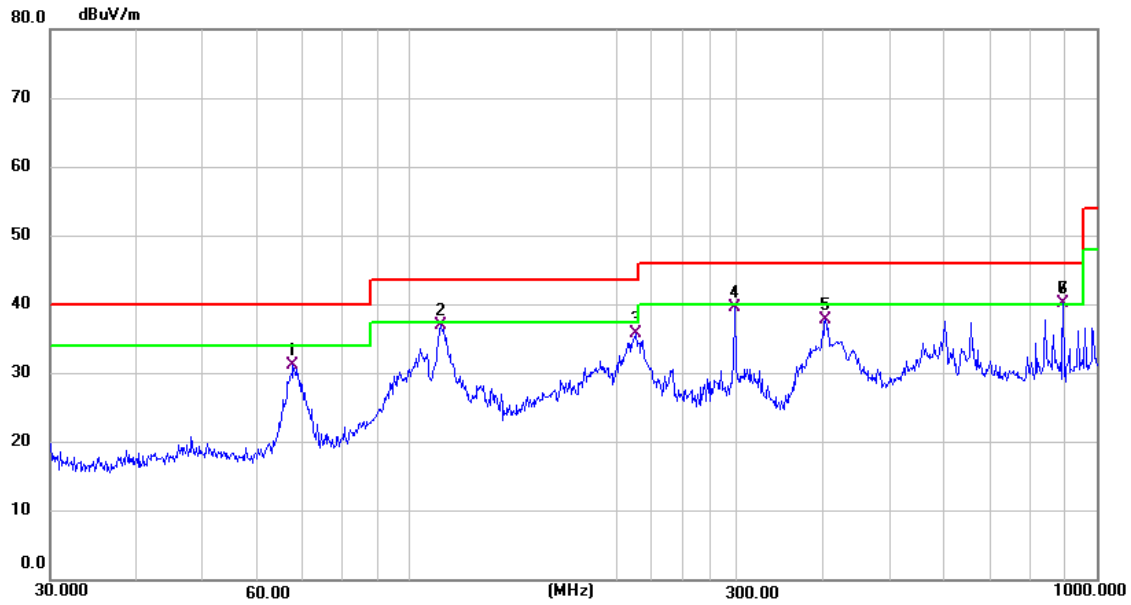

Note (1) All modes have been tested, just the worst mode has been recorded in the report.
(2)Other emissions are attenuated more than 20dB below the permissible limits, so it does not recorded in the report.

3.2.8 TEST RESULTS (1GHz-18GHz)

EUT：	HUUCH Box	Model Name. ：	HCB001
Temperature：	20 ℃	Relative Humidity：	48%
Pressure：	1010 hPa	Test Voltage ：	DC 12V from Adapter AC 120V/60Hz
Test Mode ：	TX - 802.11a		

Polar (H/V)	Frequency (MHz)	Meter Reading (dBuV)	Factor (dB/m)	Emission Level (dBuV/m)	Limits (dBuV/m)	Margin (dB)	Remark
802.11a-5745							
H	4596.350	55.7	-8.04	47.66	74	-26.34	peak
H	7911.350	49.78	-1.53	48.25	68.2	-19.95	peak
H	11490.000	46.36	3.19	51.92	74	-22.08	peak
V	4373.650	50.56	-7.53	43.03	74	-30.97	peak
V	7803.400	49.68	-1.5	48.18	68.2	-20.02	peak
V	11490.000	46.8	3.19	52.04	74	-21.96	peak
802.11a-5785							
H	4628.225	55.57	-7.85	47.72	74	-26.28	peak
H	9430.725	48.94	0.34	49.28	74	-24.72	peak
H	11570.000	47.08	2.75	52.28	74	-21.72	peak
V	4956.325	53.3	-6.04	47.26	74	-26.74	peak
V	7721.800	51.1	-1.74	49.36	74	-24.64	peak
V	11570.000	47.33	2.75	53.06	74	-20.94	peak
802.11a-5825							
H	4660.525	55.41	-7.58	47.83	74	-26.17	peak
H	7905.825	50.21	-1.57	48.64	68.2	-19.56	peak
H	11650.000	46.07	2.75	51.82	74	-22.18	peak
V	4660.100	52.33	-7.59	44.74	74	-29.26	peak
V	7899.025	50.36	-1.61	48.75	68.2	-19.45	peak
V	11650.000	46.73	2.75	52.18	74	-21.82	peak
Note：Emission Level = Meter Reading + Factor, Margin= Emission Level - Limit							

Note:"802.11a" mode is the worst mode.
The amplitude of spurious emissions that are attenuated by more than 20dB below the permissible value has no need to be reported.

3.2.9 TEST RESULTS (18GHz-40GHz)

EUT：	HUUCH Box	Model Name. ：	HCB001
Temperature：	24.3 ℃	Relative Humidity：	50%
Pressure：	1010 hPa	Test Voltage ：	DC 12V from Adapter AC 120V/60Hz
Test Mode ：	TX -802.11a		

All the modulation modes have been tested, and the worst result was report as below:

Horizontal

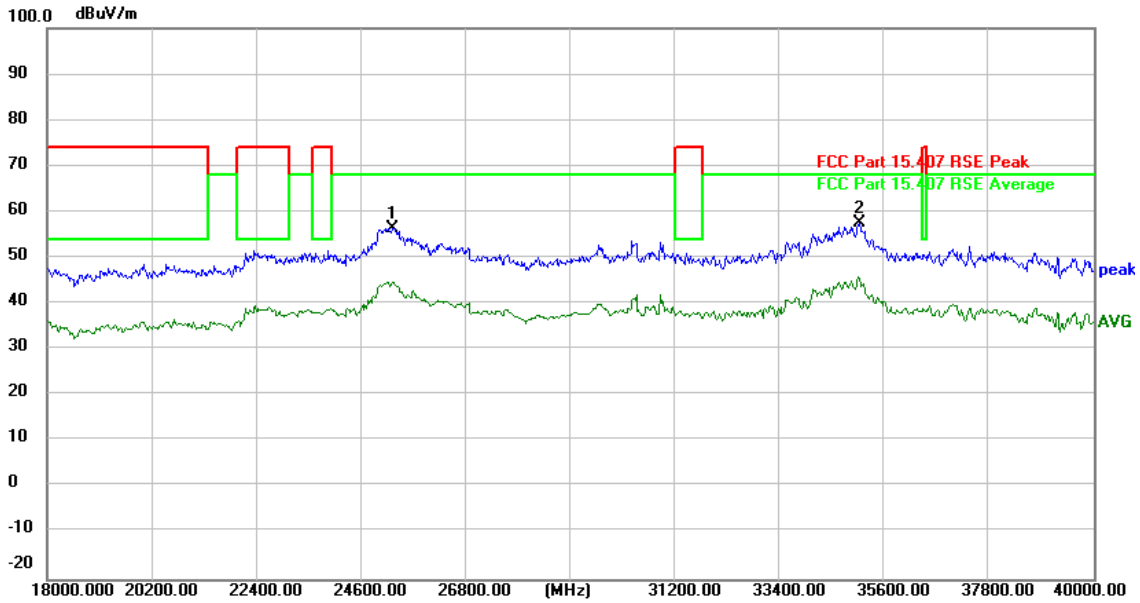

Measurement Result:

	Frequency (MHz)	Reading (dBuV)	Factor (dB/m)	Level (dBuV/m)	Limit (dBuV/m)	Margin (dB)	Detector
1	25260.000	51.30	5.25	56.55	68.20	-11.65	peak
2	35072.000	50.61	7.05	57.66	68.20	-10.54	peak

Vertical

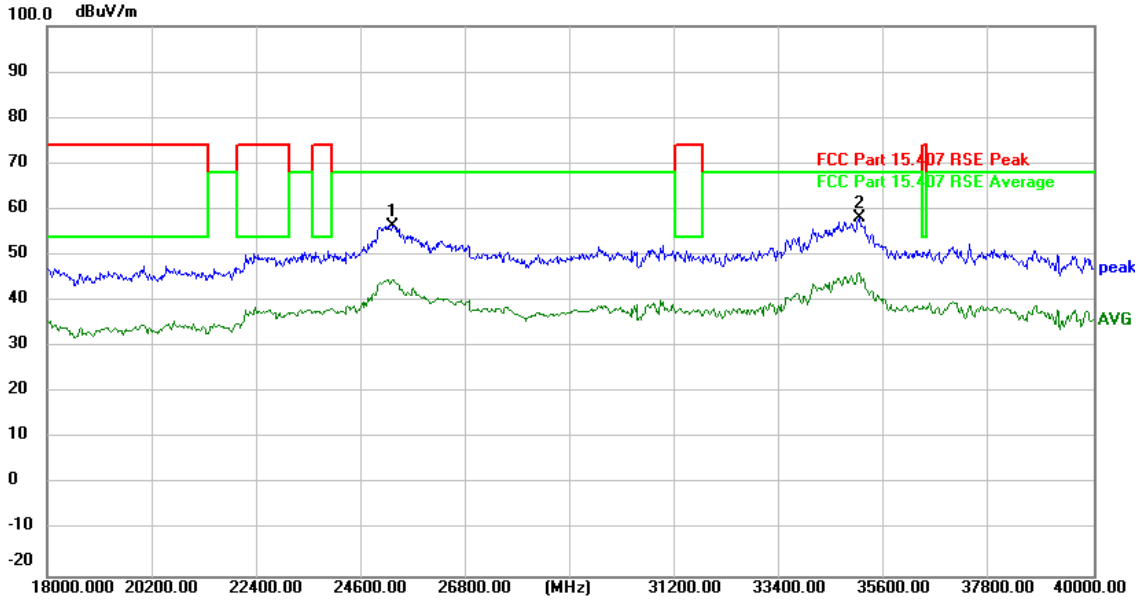

Measurement Result:

	Frequency (MHz)	Reading (dBuV)	Factor (dB/m)	Level (dBuV/m)	Limit (dBuV/m)	Margin (dB)	Detector
1	25260.000	51.30	5.25	56.55	68.20	-11.65	peak
2	35072.000	51.11	7.05	58.16	68.20	-10.04	peak

3.3 POWER SPECTRAL DENSITY TEST

3.3.1 Applied procedures / limit

According to FCC §15.407(a)(3)

For the band 5.15-5.25 GHz,

(i) For an outdoor access point operating in the band 5.15-5.25 GHz, the maximum power spectral density shall not exceed 17 dBm in any 1 megahertz band. If transmitting antennas of directional gain greater than 6 dBi are used, both the maximum conducted output power and the maximum power spectral density shall be reduced by the amount in dB that the directional gain of the antenna exceeds 6 dBi. The maximum e.i.r.p. at any elevation angle above 30 degrees as measured from the horizon must not exceed 125 mW (21 dBm).

(ii) For an indoor access point operating in the band 5.15-5.25 GHz, the maximum power spectral density shall not exceed 17 dBm in any 1 megahertz band. If transmitting antennas of directional gain greater than 6 dBi are used, both the maximum conducted output power and the maximum power spectral density shall be reduced by the amount in dB that the directional gain of the antenna exceeds 6 dBi.

(iii) For fixed point-to-point access points operating in the band 5.15-5.25 GHz, the maximum power spectral density shall not exceed 17 dBm in any 1 megahertz band. Fixed point-to-point U-NII devices may employ antennas with directional gain up to 23 dBi without any corresponding reduction in the maximum conducted output power or maximum power spectral density. For fixed point-to-point transmitters that employ a directional antenna gain greater than 23 dBi, a 1 dB reduction in maximum conducted output power and maximum power spectral density is required for each 1 dB of antenna gain in excess of 23 dBi. Fixed, point-to-point operations exclude the use of point-to-multipoint systems, omnidirectional applications, and multiple collocated transmitters transmitting the same information. The operator of the U-NII device, or if the equipment is professionally installed, the installer, is responsible for ensuring that systems employing high gain directional antennas are used exclusively for fixed, point-to-point operations.

(iv) For client devices in the 5.15-5.25 GHz band, the maximum power spectral density shall not exceed 11 dBm in any 1 megahertz band. If transmitting antennas of directional gain greater than 6 dBi are used, both the maximum conducted output power and the maximum power spectral density shall be reduced by the amount in dB that the directional gain of the antenna exceeds 6 dBi.

For the band 5.725-5.85 GHz

(3)For the band 5.725-5.85 GHz, the maximum power spectral density shall not exceed 30 dBm in any 500-kHz band. If transmitting antennas of directional gain greater than 6 dBi are used, both the maximum conducted output power and the maximum power spectral density shall be reduced by the amount in dB that the directional gain of the antenna exceeds 6 dBi.

,

3.3.2 TEST PROCEDURE

For devices operating in the bands 5.15-5.25 GHz, 5.25-5.35 GHz, and 5.47-5.725 GHz, the above procedures make use of 1 MHz RBW to satisfy directly the 1 MHz reference bandwidth specified in § 15.407(a)(5). For devices operating in the band 5.725-5.85 GHz, the rules specify a measurement bandwidth of 500 kHz. Many spectrum analyzers do not have 500 kHz RBW, thus a narrower RBW may need to be used. The rules permit the use of a RBWs less than 1 MHz, or 500 kHz, "provided that the measured power is integrated over the full reference bandwidth" to show the total power over the specified measurement bandwidth (i.e., 1 MHz, or 500 kHz). If measurements are performed using a reduced resolution bandwidth (< 1 MHz, or < 500 kHz) and integrated over 1 MHz, or 500 KHz bandwidth, the following adjustments to the procedures apply:

a) Set RBW ≥ 1/T, where T is defined in section II.B.I.a).

b) Set VBW ≥ 3 RBW.

c) If measurement bandwidth of Maximum PSD is specified in 500 kHz, add 10log(500kHz/RBW) to the measured result, whereas RBW (< 500 KHz) is the reduced resolution bandwidth of the spectrum analyzer set during measurement.

d) If measurement bandwidth of Maximum PSD is specified in 1 MHz, add 10log(1MHz/RBW) to the measured result, whereas RBW (< 1 MHz) is the reduced resolution bandwidth of spectrum analyzer set during measurement.

e) Care must be taken to ensure that the measurements are performed during a period of continuous transmission or are corrected upward for duty cycle.

Note: As a practical matter, it is recommended to use reduced RBW of 100 KHz for the sections 5.c) and 5.d) above, since RBW=100 KHZ is available on nearly all spectrum analyzers.

3.3.3 DEVIATION FROM STANDARD

No deviation.

3.3.4 TEST SETUP

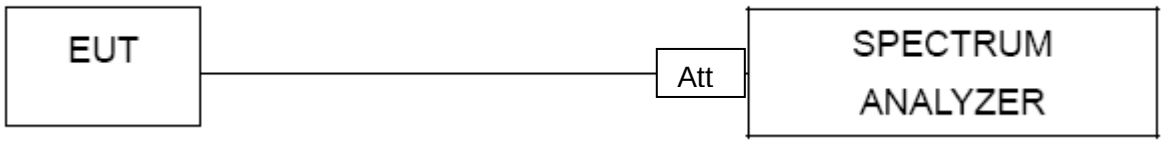

3.3.5 EUT OPERATION CONDITIONS

The EUT tested system was configured as the statements of 2.1 Unless otherwise a special operating condition is specified in the follows during the testing.

3.3.6 **TEST RESULTS**

EUT：	HUUCH Box	Model Name. ：	HCB001
Temperature：	25 ℃	Relative Humidity：	56%
Pressure：	1015 hPa	Test Voltage ：	DC 12V
Test Mode ：	TX		

Test data reference attachment.

3.4 26DB & 99% EMISSION BANDWIDTH

3.4.1 Applied procedures / limit

The maximum power spectral density is measured as a conducted emission by direct connection of a calibrated test instrument to the equipment under test. If the device cannot be connected directly, alternative techniques acceptable to the Commission may be used. Measurements in the 5.725-5.85 GHz band are made over a reference bandwidth of 500 kHz or the 26 dB emission bandwidth of the device, whichever is less. Measurements in the 5.15-5.25 GHz, 5.25-5.35 GHz, and the 5.47-5.725 GHz bands are made over a bandwidth of 1 MHz or the 26 dB emission bandwidth of the device, whichever is less. A narrower resolution bandwidth can be used, provided that the measured power is integrated over the full reference bandwidth.

3.4.2 TEST PROCEDURE

a) Set RBW = approximately 1% of the emission bandwidth.

b) Set the VBW > RBW.

c) Detector = Peak.

d) Trace mode = max hold.

e) Measure the maximum width of the emission that is 26 dB down from the maximum of the emission. Compare this with the RBW setting of the analyzer. Readjust RBW and repeat measurement as needed until the RBW/EBW ratio is approximately 1%.

The following procedure shall be used for measuring (99 %) power bandwidth:

1. Set center frequency to the nominal EUT channel center frequency.
2. Set span = 1.5 times to 5.0 times the OBW.
3. Set RBW = 1 % to 5 % of the OBW
4. Set VBW ≥ 3 · RBW
5. Video averaging is not permitted. Where practical, a sample detection and single sweep mode shall be used. Otherwise, peak detection and max hold mode (until the trace stabilizes) shall be used.
6. Use the 99 % power bandwidth function of the instrument (if available).
7. If the instrument does not have a 99 % power bandwidth function, the trace data points are recovered and directly summed in power units. The recovered amplitude data points, beginning at the lowest frequency, are placed in a running sum until 0.5 % of the total is reached; that frequency is recorded as the lower frequency. The process is repeated until 99.5 % of the total is reached; that frequency is recorded as the upper frequency. The 99% occupied bandwidth is the difference between these two frequencies.

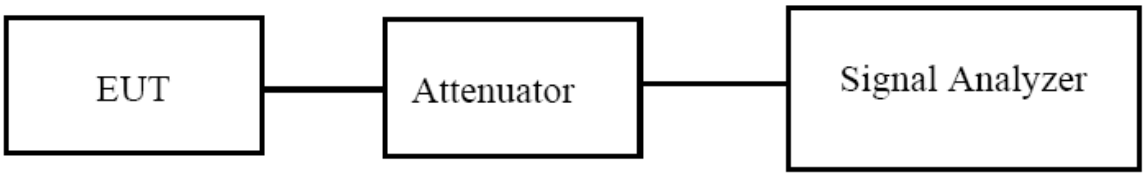

3.4.3 EUT OPERATION CONDITIONS

The EUT tested system was configured as the statements of 2.4 Unless otherwise a special operating condition is specified in the follows during the testing.

3.4.4 TEST RESULTS

EUT :	HUUCH Box	Model Name. :	HCB001
Temperature :	25 ℃	Relative Humidity :	56%
Pressure :	1012 hPa	Test Voltage :	DC 12V
Test Mode :	TX		

Test data reference attachment.

3.5 MINIMUM 6 DB BANDWIDTH

3.5.1 Applied procedures / limit

According to FCC §15.407(e)
(e) Within the 5.725-5.85 GHz band, the minimum 6 dB bandwidth of U-NII devices shall be at least 500 kHz.

3.5.2 TEST PROCEDURE

Section 15.407(e) specifies the minimum 6 dB emission bandwidth of at least 500 KHz for the band 5.715-5.85 GHz. The following procedure shall be used for measuring this bandwidth:

a) Set RBW = 100 kHz.

b) Set the video bandwidth (VBW) ≥ 3 × RBW.

c) Detector = Peak.

d) Trace mode = max hold.

e) Sweep = auto couple.

f) Allow the trace to stabilize.

g) Measure the maximum width of the emission that is constrained by the frequencies associated with the two outermost amplitude points (upper and lower frequencies) that are attenuated by 6 dB relative to the maximum level measured in the fundamental emission.

3.5.3 DEVIATION FROM STANDARD

No deviation.

3.5.4 TEST SETUP

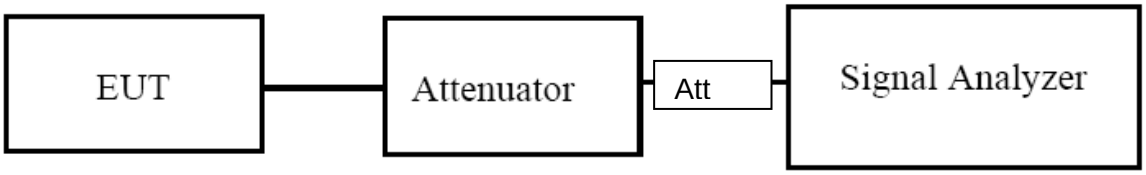

3.5.5 EUT OPERATION CONDITIONS

The EUT tested system was configured as the statements of 2.4 Unless otherwise a special operating condition is specified in the follows during the testing.

3.5.6 TEST RESULTS

EUT：	HUUCH Box	Model Name. ：	HCB001
Temperature：	25 ℃	Relative Humidity：	60%
Pressure：	1012 hPa	Test Voltage ：	DC 12V
Test Mode ：	TX		

Test data reference attachment.

3.6 MAXIMUM CONDUCTED OUTPUT POWER

3.6.1 PPLIED PROCEDURES / LIMIT

According to FCC §15.407

The maximum conduced output power should not exceed:

Frequency Band(MHz)	Limit
5150~5250	250mW
5725~5850	1W

3.6.2 TEST PROCEDURE

· Maximum conducted output power may be measured using a spectrum analyzer/EMI receiver or an RF power meter.

1. Device Configuration

If possible, configure or modify the operation of the EUT so that it transmits continuously at its maximum power control level (see section II.B.).

a) The intent is to test at 100 percent duty cycle; however a small reduction in duty cycle (to no lower than 98 percent) is permitted if required by the EUT for amplitude control purposes. Manufacturers are expected to provide software to the test lab to permit such continuous operation.

b) If continuous transmission (or at least 98 percent duty cycle) cannot be achieved due to hardware limitations (e.g., overheating), the EUT shall be operated at its maximum power control level with the transmit duration as long as possible and the duty cycle as high as possible.

2. Measurement using a Spectrum Analyzer or EMI Receiver (SA)

Measurement of maximum conducted output power using a spectrum analyzer requires integrating the spectrum across a frequency span that encompasses, at a minimum, either the EBW or the 99-percent occupied bandwidth of the signal.1 However, the EBW must be used to determine bandwidth dependent limits on maximum conducted output power in accordance with § 15.407(a).

a) The test method shall be selected as follows: (i) Method SA-1 or SA-1 Alternative (averaging with the EUT transmitting at full power throughout each sweep) shall be applied if either of the following conditions can be satisfied:

• The EUT transmits continuously (or with a duty cycle ≥ 98 percent).

• Sweep triggering or gating can be implemented in a way that the device transmits at the maximum power control level throughout the duration of each of the instrument sweeps to be averaged. This condition can generally be achieved by triggering the instrument's sweep if the duration of the sweep (with the analyzer configured as in Method SA-1, below) is equal to or shorter than the duration T of each transmission from the EUT and if those transmissions exhibit full power throughout their durations.

(ii) Method SA-2 or SA-2 Alternative (averaging across on and off times of the EUT transmissions, followed by duty cycle correction) shall be applied if the conditions of (i) cannot be achieved and the transmissions exhibit a constant duty cycle during the measurement duration. Duty cycle will be considered to be constant if variations are less than ± 2 percent.

(iii) Method SA-3 (RMS detection with max hold) or SA-3 Alternative (reduced VBW with max hold) shall be applied if the conditions of (i) and (ii) cannot be achieved.

b) Method SA-1 (trace averaging with the EUT transmitting at full power throughout each sweep): (i) Set span to encompass the entire emission bandwidth (EBW) (or, alternatively, the entire 99% occupied bandwidth) of the signal.

(ii) Set RBW = 1 MHz.

(iii) Set VBW ≥ 3 MHz.

(iv) Number of points in sweep ≥ 2 Span / RBW. (This ensures that bin-to-bin spacing is ≤ RBW/2, so that narrowband signals are not lost between frequency bins.)

(v) Sweep time = auto.

(vi) Detector = RMS (i.e., power averaging), if available. Otherwise, use sample detector mode.

(vii) If transmit duty cycle < 98 percent, use a video trigger with the trigger level set to enable triggering only on full power pulses. Transmitter must operate at maximum power control level for the entire duration of every sweep. If the EUT transmits continuously (i.e., with no off intervals) or at duty cycle ≥ 98 percent, and if each transmission is entirely at the maximum power control level, then the trigger shall be set to "free run".

(viii) Trace average at least 100 traces in power averaging (i.e., RMS) mode.

(ix) Compute power by integrating the spectrum across the EBW (or, alternatively, the entire 99% occupied bandwidth) of the signal using the instrument's band power measurement function with band limits set equal to the EBW (or occupied bandwidth) band edges. If the instrument does not have a band power function, sum the spectrum

3.6.3 DEVIATION FROM STANDARD

No deviation.

3.6.4 TEST SETUP

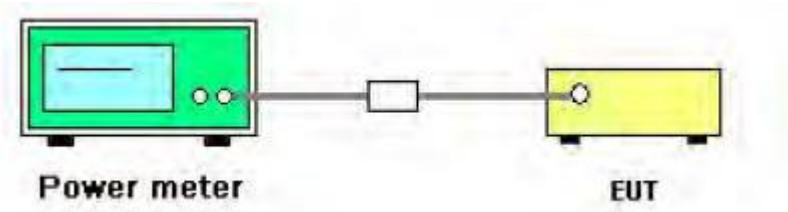

3.6.5 EUT OPERATION CONDITIONS

The EUT tested system was configured as the statements of 2.4 Unless otherwise a special operating condition is specified in the follows during the testing.

3.6.6 TEST RESULTS

EUT：	HUUCH Box	Model Name. ：	HCB001
Temperature：	25 ℃	Relative Humidity：	60%
Pressure：	1012 hPa	Test Voltage ：	DC 12V
Test Mode ：	TX		

Test data reference attachment.

3.7 OUT OF BAND EMISSIONS

3.7.1 Applicable Standard

According to FCC §15.407(b)

Undesirable emission limits. Except as shown in paragraph (b)(7) of this section, the maximum emissions outside of the frequency bands of operation shall be attenuated in accordance with the following limits:

(1) For transmitters operating in the 5.15-5.25 GHz band: All emissions outside of the 5.15-5.35 GHz band shall not exceed an e.i.r.p. of −27 dBm/MHz.

(2) For transmitters operating in the 5.725-5.85 GHz band: All emissions shall be limited to a level of −27 dBm/MHz at 75 MHz or more above or below the band edge increasing linearly to 10 dBm/MHz at 25 MHz above or below the band edge, and from 25 MHz above or below the band edge increasing linearly to a level of 15.6 dBm/MHz at 5 MHz above or below the band edge, and from 5 MHz above or below the band edge increasing linearly to a level of 27 dBm/MHz at the band edge.

3.7.2 Test Procedure

1. Check the calibration of the measuring instrument using either an internal calibrator or a known signal from an external generator.
2. Position the EUT without connection to measurement instrument. Turn on the EUT and connect its antenna terminal to measurement instrument via a low loss cable. Then set it to any one measured frequency within its operating range, and make sure the instrument is operated in its linear range.
3. Set RBW of spectrum analyzer to 1 MHz with a convenient frequency span.
4. Measure the highest amplitude appearing on spectral display and set it as a reference level. Plot the graph with marking the highest point and edge frequency.
5. Repeat above procedures until all measured frequencies were complete.

3.7.3 DEVIATION FROM STANDARD

No deviation.

3.7.4 TEST SETUP

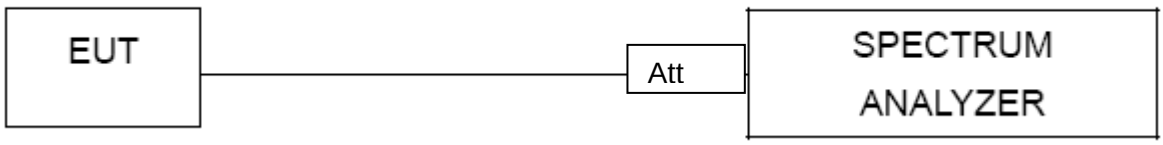

3.7.5 EUT OPERATION CONDITIONS

The EUT tested system was configured as the statements of 2.4 Unless otherwise a special operating condition is specified in the follows during the testing.

3.7.6 TEST RESULTS

EUT：	HUUCH Box	Model Name. ：	HCB001
Temperature：	25 ℃	Relative Humidity：	56%
Pressure：	1012 hPa	Test Voltage ：	DC 12V

Test data reference attachment.

3.8 SPURIOUS RF CONDUCTED EMISSIONS

3.8.1Conformance Limit

According to FCC §15.407(b)(1) (2) (3) (4)

3.8.2Measuring Instruments

The Measuring equipment is listed in the section 6.3 of this test report.

3.8.3Test Setup

Please refer to Section 6.1 of this test report.

3.8.4Test Procedure

The Spurious RF conducted emissions compliance of RF radiated emission should be measured by following the guidance in ANSI C63.10-2020 with respect to maximizing the emission by rotating the EUT, measuring the emission while the EUT is situated in three orthogonal planes (if appropriate), adjusting the measurement antenna height and polarization etc. Set RBW=100kHz and VBW= 300KHz to measure the peak field strength , and measure frequency range from 30MHz to 40GHz.

3.8.5Test Results

Remark: The measurement frequency range is from 30MHz to the 10th harmonic of the fundamental frequency. The lowest, middle and highest channels are tested to verify the spurious emissions and bandege measurement data.

Test data reference attachment.

3.9 FREQUENCY STABILITY MEASUREMENT

3.9.1 LIMIT

Manufactures of U-NII devices are responsible for ensuring frequency stability such that an emission is maintained within the band of operation under all conditions of normal operation as specified in the user's manual.

3.9.2 TEST PROCEDURES

1. The transmitter output (antenna port) was connected to the spectrum analyzer.
2. EUT have transmitted absence of modulation signal and fixed channelize.
3. Set the spectrum analyzer span to view the entire absence of modulation emissions bandwidth.
4. Set RBW = 10 kHz, VBW = 10 kHz with peak detector and maxhold settings.
5. fc is declaring of channel frequency. Then the frequency error formula is $(fc-f)/fc \times 10^6$ ppm .
6. The test extreme voltage is to change the primary supply voltage from 85 to 115 percent of the nominal value
7. Extreme temperature is -20°C~70°C.

3.9.3 TEST SETUP LAYOUT

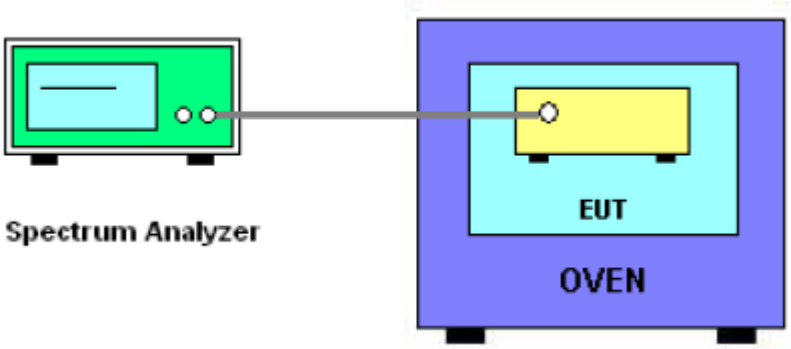

3.9.4 EUT OPERATION DURING TEST

The EUT was programmed to be in continuously un-modulation transmitting mode.

3.9.5 TEST RESULTS

EUT :	HUUCH Box	Model Name. :	HCB001
Temperature :	25 ℃	Relative Humidity :	56%
Pressure :	1012 hPa	Test Voltage :	DC 12V
Test Mode :	TX		

Voltage vs. Frequency Stability

TEST CONDITIONS				Reference Frequency：5745MHz			
				f	fc	Max. Deviation (MHz)	Max. Deviation (ppm)
T nom (°C)	20	V nom (V)	12	5745.00037	5745	0.00037	-0.07
		V max (V)	13.2	5745.01083	5745	0.01083	-1.88
		V min (V)	10.8	5745.00911	5745	0.00911	-1.59
Limits				Within 5745-5850MHz			
Result				Complies			

Temperature vs. Frequency Stability

TEST CONDITIONS				Reference Frequency：5745MHz			
				f	fc	Max. Deviation (MHz)	Max. Deviation (ppm)
V nom (V)	12	T (°C)	-20	5745.01001	5745	0.01001	-1.74
		T (°C)	-10	5745.00711	5745	0.00711	-1.24
		T (°C)	0	5745.00184	5745	0.00184	-0.32
		T (°C)	10	5745.00700	5745	0.00700	-1.22
		T (°C)	20	5745.00441	5745	0.00441	-0.77
		T (°C)	30	5745.01338	5745	0.01338	-2.33
		T (°C)	40	5745.00869	5745	0.00869	-1.51
		T (°C)	50	5745.01165	5745	0.01165	-2.03
		T (°C)	60	5745.00631	5745	0.00631	-1.10
		T (°C)	70	5745.00095	5745	0.00095	-0.16
Limits				Within 5745-5850MHz			
Result				Complies			

Voltage vs. Frequency Stability

TEST CONDITIONS				Reference Frequency：5785MHz			
				f	fc	Max. Deviation (MHz)	Max. Deviation (ppm)
T nom (°C)	20	V nom (V)	12	5785.01226	5785	0.01226	-2.12
		V max (V)	13.2	5785.01313	5785	0.01313	-2.27
		V min (V)	10.8	5785.00401	5785	0.00401	-0.69
Limits				Within 5745-5850MHz			
Result				Complies			

Temperature vs. Frequency Stability

TEST CONDITIONS				Reference Frequency：5785MHz			
				f	fc	Max. Deviation (MHz)	Max. Deviation (ppm)
V nom (V)	12	T (°C)	-20	5785.00902	5785	0.00902	-1.56
		T (°C)	-10	5785.00195	5785	0.00195	-0.34
		T (°C)	0	5785.01202	5785	0.01202	-2.08
		T (°C)	10	5785.00060	5785	0.00060	-0.10
		T (°C)	20	5785.00073	5785	0.00073	-0.13
		T (°C)	30	5785.00923	5785	0.00923	-1.60
		T (°C)	40	5785.01141	5785	0.01141	-1.97
		T (°C)	50	5785.00383	5785	0.00383	-0.66
		T (°C)	60	5785.01065	5785	0.01065	-1.84
		T (°C)	70	5785.00198	5785	0.00198	-0.34
Limits				Within 5745-5850MHz			
Result				Complies			

Voltage vs. Frequency Stability

TEST CONDITIONS				Reference Frequency：5825MHz			
				f	fc	Max. Deviation (MHz)	Max. Deviation (ppm)
T nom (°C)	20	V nom (V)	12	5825.00177	5825	0.00177	-0.30
		V max (V)	13.2	5825.01350	5825	0.01350	-2.32
		V min (V)	10.8	5825.01186	5825	0.01186	-2.04
Limits				Within 5745-5850MHz			
Result				Complies			

Temperature vs. Frequency Stability

TEST CONDITIONS				Reference Frequency：5825MHz			
				f	fc	Max. Deviation (MHz)	Max. Deviation (ppm)
V nom (V)	12	T (°C)	-20	5825.01043	5825	0.01043	-1.79
		T (°C)	-10	5825.00052	5825	0.00052	-0.09
		T (°C)	0	5825.00820	5825	0.00820	-1.41
		T (°C)	10	5825.00305	5825	0.00305	-0.52
		T (°C)	20	5825.00371	5825	0.00371	-0.64
		T (°C)	30	5825.01295	5825	0.01295	-2.22
		T (°C)	40	5825.01187	5825	0.01187	-2.04
		T (°C)	50	5825.00105	5825	0.00105	-0.18
		T (°C)	60	5825.00530	5825	0.00530	-0.91
		T (°C)	70	5825.00674	5825	0.00674	-1.16
Limits				Within 5745-5850MHz			
Result				Complies			

4. ANTENNA REQUIREMENT

4.1 STANDARD REQUIREMENT

15.203 requirement: For intentional device, according to 15.203: an intentional radiator shall be designed to ensure that no antenna other than that furnished by the responsible party shall be used with the device.

4.2 EUT ANTENNA

The EUT antenna is permanent attached FPC antenna (antenna gain: 3.16dBi). It comply with the standard requirement.

END OF REPORT