TEST REPORT

Product	:	Voice Controller
Trade mark	:	TENNIIX
Model/Type reference	:	VOICE01
Serial Number	:	N/A
Report Number	:	EED32R81737801
FCC ID	:	2BS62-TNXV001
Date of Issue	:	Feb. 05, 2026
Test Standards	:	47 CFR Part 15 Subpart C
Test result	:	PASS

Prepared for:

Shenzhen Enhanced Power Technology Co., Ltd.
No. 301, Plant 11, Industrial zone 228, Silian community, Henggang street, Longgang District, Shenzhen

Prepared by:

Centre Testing International Group Co., Ltd.
Hongwei Industrial Park, Zone 70, Bao'an District, Shenzhen, Guangdong, China
TEL: +86-755-3368 3668
FAX: +86-755-3368 3385

Compiled by:	Lucas Lu	Reviewed by:	Keven Tan
Approved by:	Aaron Ma	Date:	Feb. 05, 2026

Check No.:1951170925

1 Content

1 CONTENT 2
2 TEST SUMMARY 3
3 GENERAL INFORMATION 4
3.1 CLIENT INFORMATION 4
3.2 GENERAL DESCRIPTION OF EUT 4
3.3 TEST CONFIGURATION 5
3.4 TEST ENVIRONMENT 6
3.5 DESCRIPTION OF SUPPORT UNITS 6
3.6 TEST LOCATION 6
3.7 MEASUREMENT UNCERTAINTY (95% CONFIDENCE LEVELS, K=2) 7
4 EQUIPMENT LIST 8
5 TEST RESULTS AND MEASUREMENT DATA 12
5.1 ANTENNA REQUIREMENT 12
5.2 CONDUCTED EMISSIONS 13
5.3 MAXIMUM CONDUCTED OUTPUT POWER 17
5.4 DTS BANDWIDTH 18
5.5 MAXIMUM POWER SPECTRAL DENSITY 19
5.6 BAND EDGE MEASUREMENTS AND CONDUCTED SPURIOUS EMISSION 20
5.7 RADIATED SPURIOUS EMISSION & RESTRICTED BANDS 21
6 APPENDIX A 31
7 PHOTOGRAPHS OF TEST SETUP 32
8 PHOTOGRAPHS OF EUT CONSTRUCTIONAL DETAILS 34

2 Test Summary

Test Item	Test Requirement	Result
Antenna Requirement	47 CFR Part 15 Subpart C Section 15.203/15.247 (c)	PASS
AC Power Line Conducted Emission	47 CFR Part 15 Subpart C Section 15.207	PASS
DTS Bandwidth	47 CFR Part 15 Subpart C Section 15.247 (a)(2)	PASS
Maximum Conducted Output Power	47 CFR Part 15 Subpart C Section 15.247 (b)(3)	PASS
Maximum Power Spectral Density	47 CFR Part 15 Subpart C Section 15.247 (e)	PASS
Band Edge Measurements	47 CFR Part 15 Subpart C Section 15.247(d)	PASS
Conducted Spurious Emissions	47 CFR Part 15 Subpart C Section 15.247(d)	PASS
Radiated Spurious Emission & Restricted bands	47 CFR Part 15 Subpart C Section 15.205/15.209	PASS

3 General Information

3.1 Client Information

Applicant:	Shenzhen Enhanced Power Technology Co., Ltd.
Address of Applicant:	No. 301, Plant 11, Industrial zone 228, Silian community, Henggang street, Longgang District, Shenzhen
Manufacturer:	Shenzhen Enhanced Power Technology Co., Ltd.
Address of Manufacturer:	No. 301, Plant 11, Industrial zone 228, Silian community, Henggang street, Longgang District, Shenzhen
Factory:	Guangdong Enok Communication Co., Ltd.
Address of Factory:	No.62, Lxiang Road, Dalang Town, Dongguan City, Guangdong

3.2 General Description of EUT

Product Name:	Voice Controller
Model No.:	VOICE01
Test Model No.:	VOICE01
Trade mark:	TENNIIX
Product Type:	☐ Mobile ☒ Portable ☐ Fix Location
Operation Frequency:	2402MHz~2480MHz
Modulation Type:	GFSK
Transfer Rate:	1Mbps
Number of Channel:	40
Antenna Type:	PCB Antenna
Antenna Gain:	3.96 dBi
Power Supply:	DC 5V
Test Voltage:	DC 5V
Sample Received Date:	Sep. 17, 2025
Sample tested Date:	Sep. 17, 2025 to Nov. 06, 2025

Operation Frequency each of channel							
Channel	Frequency (MHz)	Channel	Frequency (MHz)	Channel	Frequency (MHz)	Channel	Frequency (MHz)
0	2402	10	2422	20	2442	30	2462
1	2404	11	2424	21	2444	31	2464
2	2406	12	2426	22	2446	32	2466
3	2408	13	2428	23	2448	33	2468
4	2410	14	2430	24	2450	34	2470
5	2412	15	2432	25	2452	35	2472
6	2414	16	2434	26	2454	36	2474
7	2416	17	2436	27	2456	37	2476
8	2418	18	2438	28	2458	38	2478
9	2420	19	2440	29	2460	39	2480

Note:

In section 15.31(m), regards to the operating frequency range over 10 MHz, the lowest frequency, the middle frequency, and the highest frequency of channel were selected to perform the test, and the selected channel see below:

Channel	Frequency(MHz)
The lowest channel (CH0)	2402
The middle channel (CH19)	2440
The highest channel (CH39)	2480

3.3 Test Configuration

EUT Test Software Settings:	
Test Software:	bgtool.exe (manufacturer declare)
EUT Power Grade:	Default (Power level is built-in set parameters and cannot be changed and selected)

Use test software to set the lowest frequency, the middle frequency and the highest frequency keep transmitting of the EUT.

Test Mode	Modulation	Rate	Channel	Frequency(MHz)
Mode a	GFSK	1Mbps	CH0	2402
Mode b	GFSK	1Mbps	CH19	2440
Mode c	GFSK	1Mbps	CH39	2480

3.4 Test Environment

Operating Environment:	
Radiated Spurious Emissions:	
Temperature:	22~25.0 °C
Humidity:	50~55 % RH
Atmospheric Pressure:	1010mbar
Conducted Emissions:	
Temperature:	22~25.0 °C
Humidity:	50~55 % RH
Atmospheric Pressure:	1010mbar
RF Conducted:	
Temperature:	22~25.0 °C
Humidity:	50~55 % RH
Atmospheric Pressure:	1010mbar

3.5 Description of Support Units

The EUT has been tested independently.

3.6 Test Location

All tests were performed at:

Centre Testing International Group Co., Ltd

Hongwei Industrial Park, Zone 70, Bao'an District, Shenzhen, Guangdong, China

Telephone: +86 (0) 755 33683668 Fax:+86 (0) 755 33683385

No tests were sub-contracted.

FCC Designation No.: CN1164, Test Firm Registration No.: 260439

3.7 Measurement Uncertainty (95% confidence levels, k=2)

No.	Item	Measurement Uncertainty
1	Radio Frequency	7.9×10^{-8}
2	RF power, conducted	0.46dB (30MHz-1GHz)
		0.55dB (1GHz-40GHz)
3	Radiated Spurious emission test	3.3dB (9kHz-30MHz)
		4.3dB (30MHz-1GHz)
		4.5dB (1GHz-18GHz)
		3.4dB (18GHz-40GHz)
4	Conduction emission	3.5dB (9kHz-150kHz)
		3.1dB (150kHz-30MHz)
5	Temperature test	0.64°C
6	Humidity test	3.8%
7	DC power voltages	0.026%

4 Equipment List

RF test system					
Equipment	**Manufacturer**	**Model No.**	**Serial Number**	**Cal. Date (mm-dd-yyyy)**	**Cal. Due date (mm-dd-yyyy)**
Spectrum Analyzer	Keysight	N9010A	MY54510339	12-05-2024	12-04-2025
Signal Generator	Keysight	N5182B	MY53051549	11-30-2024	11-29-2025
DC Power	Keysight	E3642A	MY56376072	11-30-2024	11-29-2025
Communication test set	R&S	CMW500	169004	03-03-2025	03-02-2026
RF control unit(power unit)	JS Tonscend	JS0806-2	24I80620925	07-21-2025	07-20-2026
Wi-Fi 7GHz Band Extendder	JS Tonscend	TS-WF7U2	2206200002	05-12-2025	05-11-2026
High-low temperature test chamber	Dong Guang Qin Zhuo	LK-80GA	QZ20150611879	11-30-2024	11-29-2025
Temperature/ Humidity Indicator	biaozhi	HM10	1804186	05-26-2025	05-25-2026
BT&WI-FI Automatic test software	JS Tonscend	JS1120-3	V3.3.20	---	---
Spectrum Analyzer	R&S	FSV3044	101509	02-14-2025	02-13-2026

Conducted disturbance Test					
Equipment	Manufacturer	Model No.	Serial Number	Cal. date (mm-dd-yyyy)	Cal. Due date (mm-dd-yyyy)
Receiver	R&S	ESCI	100435	04-08-2025	04-07-2026
Temperature/ Humidity Indicator	Defu	TH128	/	03-31-2025	03-30-2026
LISN	R&S	ENV216	100098	09-19-2024 09-13-2025	09-18-2025 09-12-2026
Barometer	changchun	DYM3	1188	---	---
Test software	Fara	EZ-EMC	EMC-CON 3A1.1	---	---
Capacitive voltage probe	Schwarzbeck	CVP 9222C	00124	06-07-2025	06-06-2026
ISN	TESEQ	ISN T800	30297	12-05-2024	12-04-2025

3M Semi-anechoic Chamber (2)- Radiated disturbance Test					
Equipment	Manufacturer	Model No.	Serial Number	Cal. date (mm-dd-yyyy)	Cal. Due date (mm-dd-yyyy)
3M Chamber & Accessory Equipment	TDK	SAC-3	---	01/13/2024	01/12/2027
Receiver	R&S	ESCI7	100938-003	09/07/2024 09/03/2025	09/06/2025 09/02/2026
TRILOG Broadband Antenna	schwarzbeck	VULB 9163	9163-618	05/14/2025	05/13/2026
Loop Antenna	Schwarzbeck	FMZB 1519B	1519B-076	04/07/2025	04/06/2026
Microwave Preamplifier	Tonscend	EMC051845SE	980380	12/05/2024	12/04/2025
Horn Antenna	A.H.SYSTEMS	SAS-574	374	07/02/2023	07/01/2026
Horn Antenna	ETS-LINGREN	BBHA 9120D	9120D-1869	04/07/2025	04/06/2026
Preamplifier	Agilent	11909A	12-1	03/03/2025	03/02/2026
Preamplifier	CD	PAP-1840-60	6041.6042	05/26/2025	05/25/2026
Test software	Fara	EZ-EMC	EMEC-3A1-Pre	---	---
Cable line	Fulai(7M)	SF106	5219/6A	01/13/2024	01/12/2027
Cable line	Fulai(6M)	SF106	5220/6A	01/13/2024	01/12/2027
Cable line	Fulai(3M)	SF106	5216/6A	01/13/2024	01/12/2027
Cable line	Fulai(3M)	SF106	5217/6A	01/13/2024	01/12/2027

3M full-anechoic Chamber					
Equipment	**Manufacturer**	**Model No.**	**Serial Number**	**Cal. Date (mm-dd-yyyy)**	**Cal. Due date (mm-dd-yyyy)**
Fully Anechoic Chamber	TDK	FAC-3	---	01-09-2024	01-08-2027
Receiver	Keysight	N9038A	MY57290136	01-04-2025	01-03-2026
Spectrum Analyzer	Keysight	N9020B	MY57111112	01-14-2025	01-13-2026
Spectrum Analyzer	Keysight	N9030B	MY57140871	01-14-2025	01-13-2026
TRILOG Broadband Antenna	Schwarzbeck	VULB 9163	9163-1148	04-12-2025	04-11-2026
Horn Antenna	Schwarzbeck	BBHA 9170	9170-832	04-12-2025	04-11-2026
Horn Antenna	ETS-LINDGREN	3117	57407	06-29-2025	06-28-2026
Preamplifier	EMCI	EMC001330	980563	03-03-2025	03-02-2026
Preamplifier	Tonscend	TAP-011858	AP21B806112	07-07-2025	07-06-2026
Preamplifier	Tonscend	EMC051845SE	980380	12-05-2024	12-04-2025
Communication test set	R&S	CMW500	102898	01-04-2025	01-03-2026
Temperature/ Humidity Indicator	biaozhi	GM1360	EE1186631	03-31-2025	03-30-2026
RSE Automatic test software	JS Tonscend	JS36-RSE	V4.0.0.0	---	---
Cable line	Times	SFT205-NMSM-2.50M	394812-0001	01-09-2024	01-08-2027
Cable line	Times	SFT205-NMSM-2.50M	394812-0002	01-09-2024	01-08-2027
Cable line	Times	SFT205-NMSM-2.50M	394812-0003	01-09-2024	01-08-2027
Cable line	Times	SFT205-NMSM-2.50M	393495-0001	01-09-2024	01-08-2027
Cable line	Times	EMC104-NMNM-1000	SN160710	01-09-2024	01-08-2027
Cable line	Times	SFT205-NMSM-3.00M	394813-0001	01-09-2024	01-08-2027
Cable line	Times	SFT205-NMNM-1.50M	381964-0001	01-09-2024	01-08-2027
Cable line	Times	SFT205-NMSM-7.00M	394815-0001	01-09-2024	01-08-2027
Cable line	Times	HF160-KMKM-3.00M	393493-0001	01-09-2024	01-08-2027

5 Test results and Measurement Data

5.1 Antenna Requirement

Standard requirement:	47 CFR Part 15C Section 15.203 /247(c)
15.203 requirement: An intentional radiator shall be designed to ensure that no antenna other than that furnished by the responsible party shall be used with the device. The use of a permanently attached antenna or of an antenna that uses a unique coupling to the intentional radiator, the manufacturer may design the unit so that a broken antenna can be replaced by the user, but the use of a standard antenna jack or electrical connector is prohibited. 15.247(b) (4) requirement: The conducted output power limit specified in paragraph (b) of this section is based on the use of antennas with directional gains that do not exceed 6 dBi. Except as shown in paragraph (c) of this section, if transmitting antennas of directional gain greater than 6 dBi are used, the conducted output power from the intentional radiator shall be reduced below the stated values in paragraphs (b)(1), (b)(2), and (b)(3) of this section, as appropriate, by the amount in dB that the directional gain of the antenna exceeds 6 dBi.	
EUT Antenna:	Please see Internal photos
The antenna is PCB antenna. The best case gain of the antenna is 3.96 dBi.	

5.2 Conducted Emissions

Test Requirement:	47 CFR Part 15C Section 15.207
Test Method:	ANSI C63.10: 2020
Test Frequency Range:	150kHz to 30MHz
Receiver setup:	RBW=9 kHz, VBW=30 kHz, Sweep time=auto
Limit:	

Frequency range (MHz)	Limit (dBuV)	
	Quasi-peak	Average
0.15-0.5	66 to 56*	56 to 46*
0.5-5	56	46
5-30	60	50

* Decreases with the logarithm of the frequency.

Test Setup:

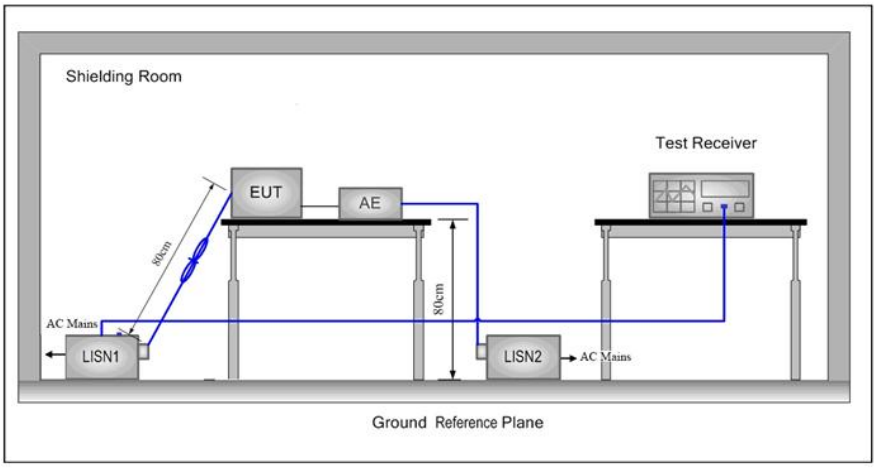

Test Procedure:

1) The mains terminal disturbance voltage test was conducted in a shielded room.
2) The EUT was connected to AC power source through a LISN 1 (Line Impedance Stabilization Network) which provides a 50Ω/50μH + 5Ω linear impedance. The power cables of all other units of the EUT were connected to a second LISN 2, which was bonded to the ground reference plane in the same way as the LISN 1 for the unit being measured. A multiple socket outlet strip was used to connect multiple power cables to a single LISN provided the rating of the LISN was not exceeded.
3) The tabletop EUT was placed upon a non-metallic table 0.8m above the ground reference plane. And for floor-standing arrangement, the EUT was placed on the horizontal ground reference plane.
4) The test was performed with a vertical ground reference plane. The rear of the EUT shall be 0.4 m from the vertical ground reference plane. The vertical ground reference plane was bonded to the horizontal ground reference plane. The LISN 1 was placed 0.8 m from the boundary of the unit under test and bonded to a ground reference plane for LISNs mounted on top of the ground reference plane. This distance was between the closest points of the LISN 1 and the EUT. All other units of the EUT and associated equipment was at least 0.8 m from the LISN 2.
5) In order to find the maximum emission, the relative positions of equipment and all of the interface cables must be changed according to ANSI C63.10: 2020 on conducted measurement.

Test Mode:	All modes were tested, only the worst case mode a was recorded in the report.
Test Results:	Pass

Measurement Data

Live line:

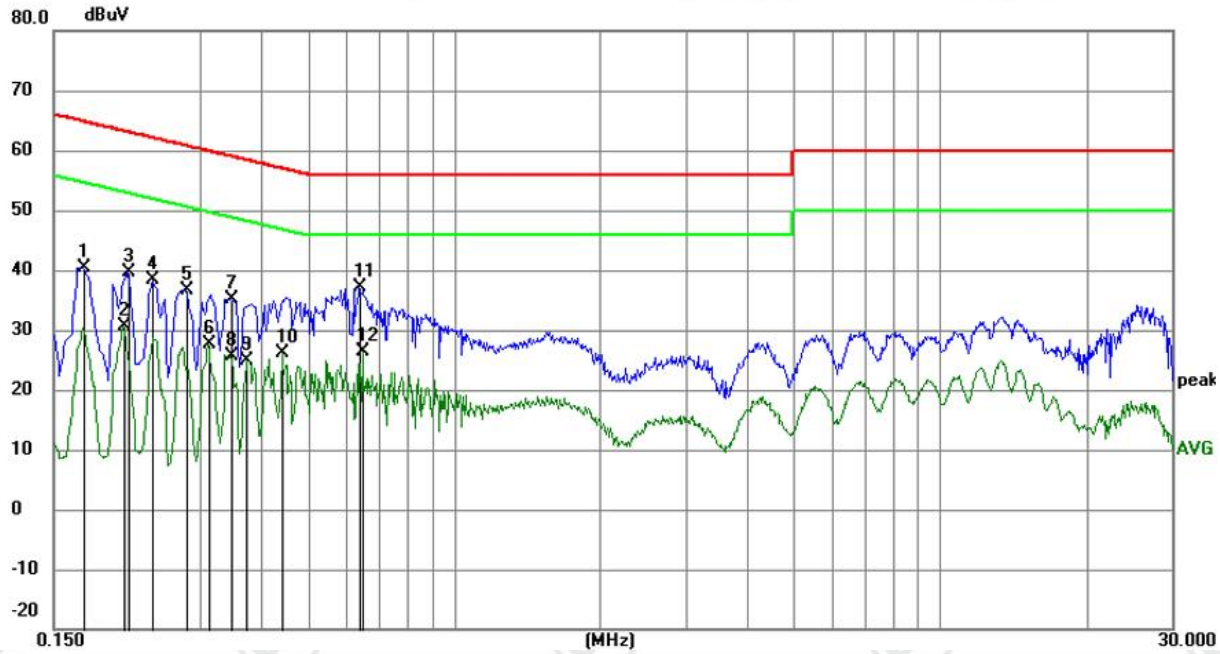

No.	Mk.	Freq.	Reading Level	Correct Factor	Measure-ment	Limit	Margin		
		MHz	dBuV	dB	dBuV	dBuV	dB	Detector	Comment
1		0.1725	30.12	10.25	40.37	64.84	-24.47	QP	
2		0.2085	20.39	10.20	30.59	53.26	-22.67	AVG	
3		0.2130	29.51	10.20	39.71	63.09	-23.38	QP	
4		0.2400	28.08	10.18	38.26	62.10	-23.84	QP	
5		0.2805	26.48	10.15	36.63	60.80	-24.17	QP	
6		0.3120	17.53	10.13	27.66	49.92	-22.26	AVG	
7		0.3480	24.95	10.11	35.06	59.01	-23.95	QP	
8		0.3480	15.48	10.11	25.59	49.01	-23.42	AVG	
9		0.3750	14.79	10.10	24.89	48.39	-23.50	AVG	
10		0.4425	16.04	10.09	26.13	47.01	-20.88	AVG	
11	*	0.6405	27.00	10.11	37.11	56.00	-18.89	QP	
12		0.6495	16.28	10.11	26.39	46.00	-19.61	AVG	

Remark:

1. The following Quasi-Peak and Average measurements were performed on the EUT:
2. Final Test Level =Receiver Reading + LISN Factor + Cable Loss.
3. Margin=Measurement-Limit.

4. Measurement=Reading Level+Correct Factor.
5. In the test results, an asterisk (*) indicates Maximum Data, a cross (X) indicates over Limit.
6. If the Peak value under Average limit, the Average value is not recorded in the report.

Neutral line:

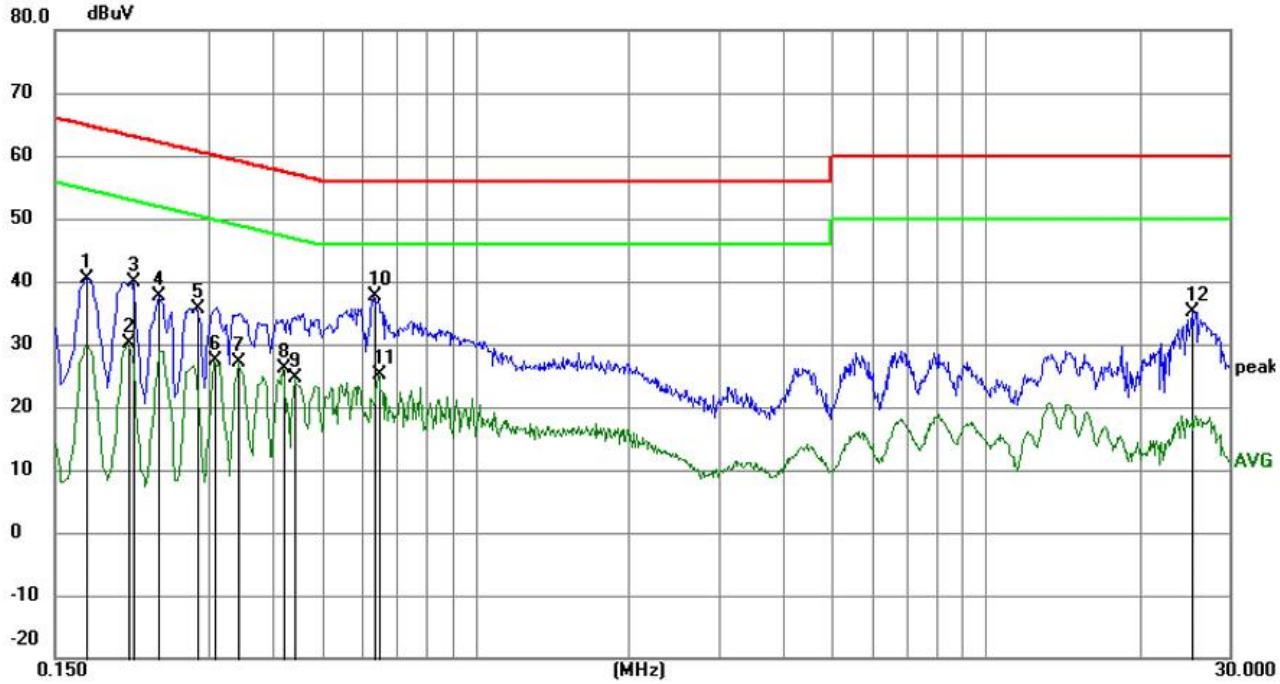

No.	Mk.	Freq.	Reading Level	Correct Factor	Measure-ment	Limit	Margin		
		MHz	dBuV	dB	dBuV	dBuV	dB	Detector	Comment
1		0.1725	30.22	10.25	40.47	64.84	-24.37	QP	
2		0.2085	19.84	10.20	30.04	53.26	-23.22	AVG	
3		0.2130	29.68	10.20	39.88	63.09	-23.21	QP	
4		0.2400	27.56	10.18	37.74	62.10	-24.36	QP	
5		0.2850	25.57	10.14	35.71	60.67	-24.96	QP	
6		0.3075	17.21	10.13	27.34	50.04	-22.70	AVG	
7		0.3435	17.09	10.11	27.20	49.12	-21.92	AVG	
8		0.4200	16.08	10.09	26.17	47.45	-21.28	AVG	
9		0.4425	14.42	10.09	24.51	47.01	-22.50	AVG	
10	*	0.6315	27.54	10.11	37.65	56.00	-18.35	QP	
11		0.6450	14.97	10.11	25.08	46.00	-20.92	AVG	
12		25.4130	25.41	9.81	35.22	60.00	-24.78	QP	

Remark:

1. The following Quasi-Peak and Average measurements were performed on the EUT:
2. Final Test Level =Receiver Reading + LISN Factor + Cable Loss.
3. Margin=Measurement-Limit.
4. Measurement=Reading Level+Correct Factor.
5. In the test results, an asterisk (*) indicates Maximum Data, a cross (X) indicates over Limit.
6. If the Peak value under Average limit, the Average value is not recorded in the report.

5.3 Maximum Conducted Output Power

Test Requirement:	47 CFR Part 15C Section 15.247 (b)(3)
Test Method:	ANSI C63.10: 2020
Test Setup:	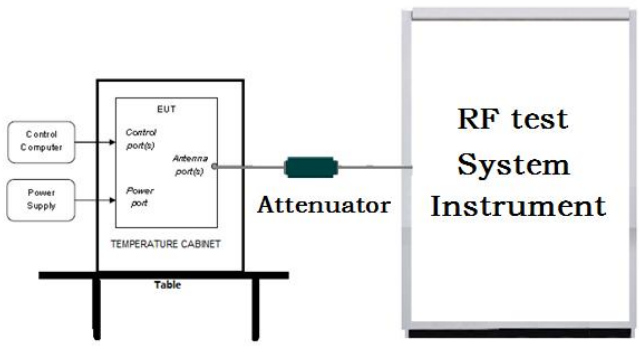 Remark: Offset=Cable loss+ attenuation factor.
Test Procedure:	a) Set the RBW ⩾ DTS bandwidth. b) Set VBW ⩾ 3 × RBW. c) Set span ⩾ 3 x RBW d) Sweep time = auto couple. e) Detector = peak. f) Trace mode = max hold. g) Allow trace to fully stabilize. h) Use peak marker function to determine the peak amplitude level.
Limit:	30dBm
Test Mode:	Refer to clause 3.3
Test Results:	Refer to Appendix A

5.4 DTS Bandwidth

Test Requirement:	47 CFR Part 15C Section 15.247 (a)(2)
Test Method:	ANSI C63.10: 2020
Test Setup:	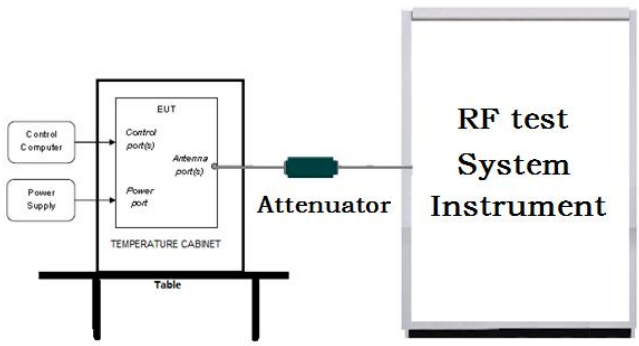 Remark: Offset=Cable loss+ attenuation factor.
Test Procedure:	a) Set RBW = 100 kHz. b) Set the VBW ⩾[3 × RBW]. c) Detector = peak. d) Trace mode = max hold. e) Sweep = auto couple. f) Allow the trace to stabilize. g) Measure the maximum width of the emission that is constrained by the frequencies associated with the two outermost amplitude points (upper and lower frequencies) that are attenuated by 6 dB relative to the maximum level measured in the fundamental emission.
Limit:	≥ 500 kHz
Test Mode:	Refer to clause 3.3
Test Results:	Refer to Appendix A

5.5 Maximum Power Spectral Density

Test Requirement:	47 CFR Part 15C Section 15.247 (e)
Test Method:	ANSI C63.10: 2020
Test Setup:	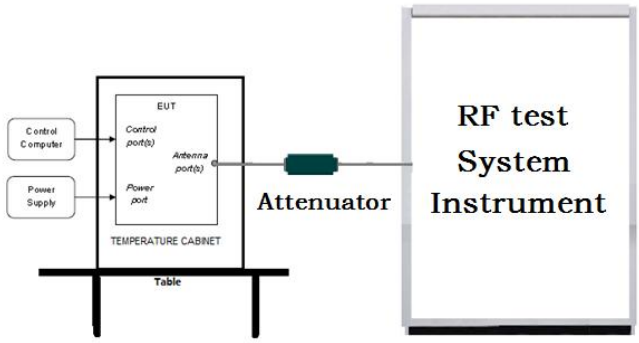 Remark: Offset=Cable loss+ attenuation factor.
Test Procedure:	a) Set analyzer center frequency to DTS channel center frequency. b) Set the span to 1.5 times the DTS bandwidth. c) Set the RBW to 3 kHz ⩽ RBW ⩽ 100 kHz. d) Set the VBW ⩾ [3 × RBW]. e) Detector = peak. f) Sweep time = auto couple. g) Trace mode = max hold. h) Allow trace to fully stabilize. i) Use the peak marker function to determine the maximum amplitude level within the RBW. j) If measured value exceeds requirement, then reduce RBW (but no less than 3 kHz) and repeat.
Limit:	≤8.00dBm/3kHz
Test Mode:	Refer to clause 3.3
Test Results:	Refer to Appendix A

5.6 Band Edge measurements and Conducted Spurious Emission

Test Requirement:	47 CFR Part 15C Section 15.247 (d)
Test Method:	ANSI C63.10: 2020
Test Setup:	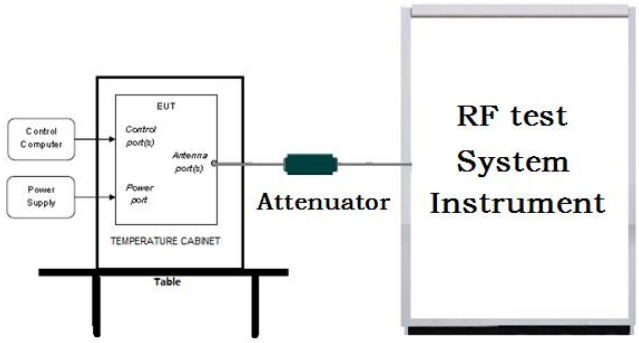 Remark: Offset=Cable loss+ attenuation factor.
Test Procedure:	a) Set RBW =100KHz. b) Set VBW = 300KHz. c) Sweep time = auto couple. d) Detector = peak. e) Trace mode = max hold. f) Allow trace to fully stabilize. g) Use peak marker function to determine the peak amplitude level.
Limit:	In any 100 kHz bandwidth outside the frequency band in which the spread spectrum intentional radiator is operating, the radio frequency power that is produced by the intentional radiator shall be at least 20 dB below that in the 100 kHz bandwidth within the band that contains the highest level of the desired power, based on either an RF conducted or a radiated measurement.
Test Mode:	Refer to clause 3.3
Test Results:	Refer to Appendix A

5.7 Radiated Spurious Emission & Restricted bands

Test Requirement:	47 CFR Part 15C Section 15.209 and 15.205
Test Method:	ANSI C63.10: 2020
Test Site:	Measurement Distance: 3m (Semi-Anechoic Chamber)
Receiver Setup:	

Frequency	Detector	RBW	VBW	Remark
0.009MHz-0.090MHz	Peak	10kHz	30kHz	Peak
0.009MHz-0.090MHz	Average	10kHz	30kHz	Average
0.090MHz-0.110MHz	Quasi-peak	10kHz	30kHz	Quasi-peak
0.110MHz-0.490MHz	Peak	10kHz	30kHz	Peak
0.110MHz-0.490MHz	Average	10kHz	30kHz	Average
0.490MHz -30MHz	Quasi-peak	10kHz	30kHz	Quasi-peak
30MHz-1GHz	Quasi-peak	100 kHz	300kHz	Quasi-peak
Above 1GHz	Peak	1MHz	3MHz	Peak
	Peak	1MHz	10kHz	Average

Limit:

Frequency	Field strength (microvolt/meter)	Limit (dBuV/m)	Remark	Measurement distance (m)
0.009MHz-0.490MHz	2400/F(kHz)	-	-	300
0.490MHz-1.705MHz	24000/F(kHz)	-	-	30
1.705MHz-30MHz	30	-	-	30
30MHz-88MHz	100	40.0	Quasi-peak	3
88MHz-216MHz	150	43.5	Quasi-peak	3
216MHz-960MHz	200	46.0	Quasi-peak	3
960MHz-1GHz	500	54.0	Quasi-peak	3
Above 1GHz	500	54.0	Average	3

Note: 15.35(b), Unless otherwise specified, the limit on peak radio frequency emissions is 20dB above the maximum permitted average emission limit applicable to the equipment under test. This peak limit applies to the total peak emission level radiated by the device.

Test Setup:	

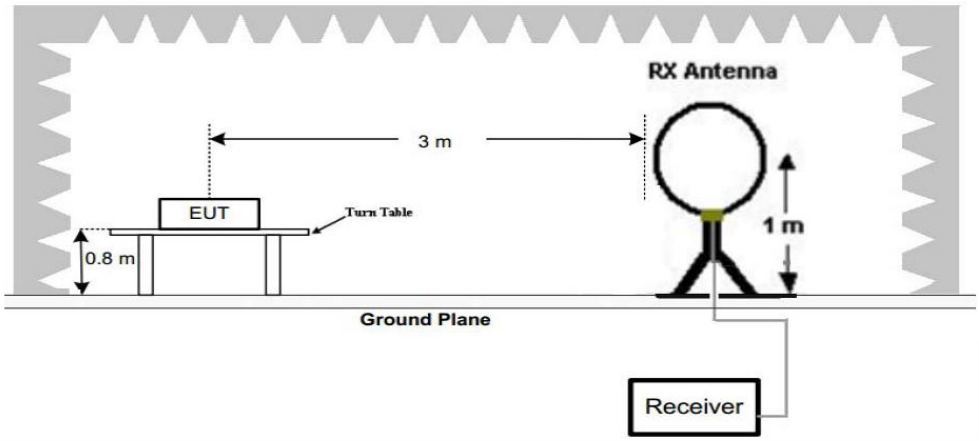

Figure 1. Below 30MHz

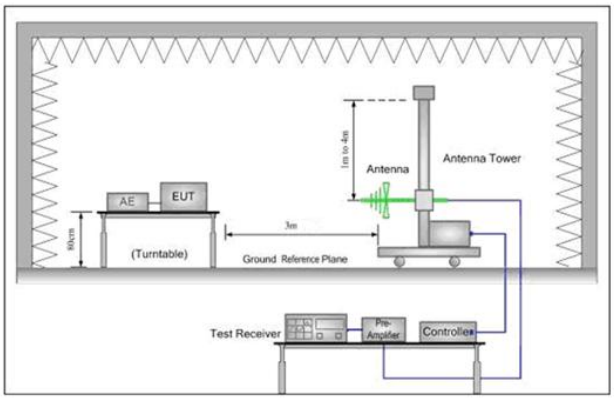

Figure 2. 30MHz to 1GHz

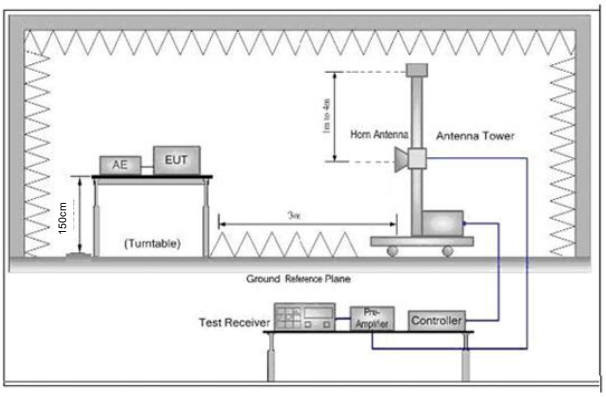

Figure 3. Above 1 GHz

Test Procedure:	a. 1) Below 1G: The EUT was placed on the top of a rotating table 0.8 meters above the ground at a 3 meter semi-anechoic camber. The table was rotated 360 degrees to determine the position of the highest radiation. 2) Above 1G: The EUT was placed on the top of a rotating table 1.5 meters above the ground at a 3 meter semi-anechoic camber. The table was rotated 360 degrees to determine the position of the highest radiation. Note: For the radiated emission test above 1GHz: Place the measurement antenna away from each area of the EUT determined to be a source of emissions at the specified measurement distance, while keeping the measurement antenna aimed at the source of emissions at each frequency of significant emissions, with polarization oriented for maximum response. The measurement antenna may have to be higher or lower than the EUT, depending on the radiation pattern of the emission and staying aimed at the emission source for receiving the maximum signal. The final measurement antenna elevation shall be that which maximizes the emissions. The measurement antenna elevation for maximum emissions shall be restricted to a range of heights of from 1 m to 4 m above the ground or reference ground plane. b. The EUT was set 3 meters away from the interference-receiving antenna, which was mounted on the top of a variable-height antenna tower. c. The antenna height is varied from one meter to four meters above the

	ground to determine the maximum value of the field strength. Both horizontal and vertical polarizations of the antenna are set to make the measurement. d. For each suspected emission, the EUT was arranged to its worst case and then the antenna was tuned to heights from 1 meter to 4 meters (for the test frequency of below 30MHz, the antenna was tuned to heights 1 meter) and the rotatable table was turned from 0 degrees to 360 degrees to find the maximum reading. e. The test-receiver system was set to Peak Detect Function and Specified Bandwidth with Maximum Hold Mode. f. If the emission level of the EUT in peak mode was 10dB lower than the limit specified, then testing could be stopped and the peak values of the EUT would be reported. Otherwise the emissions that did not have 10dB margin would be re-tested one by one using peak, quasi-peak or average method as specified and then reported in a data sheet. g. Test the EUT in the lowest channel (2402MHz),the middle channel (2440MHz),the Highest channel (2480MHz) h. The radiation measurements are performed in X, Y, Z axis positioning for Transmitting mode, and found the X axis positioning which it is the worst case. i. Repeat above procedures until all frequencies measured was complete.
Test Mode:	Refer to clause 3.3
Test Results:	Pass

Radiated Spurious Emission below 1GHz:

Test Graph

Horizontal:

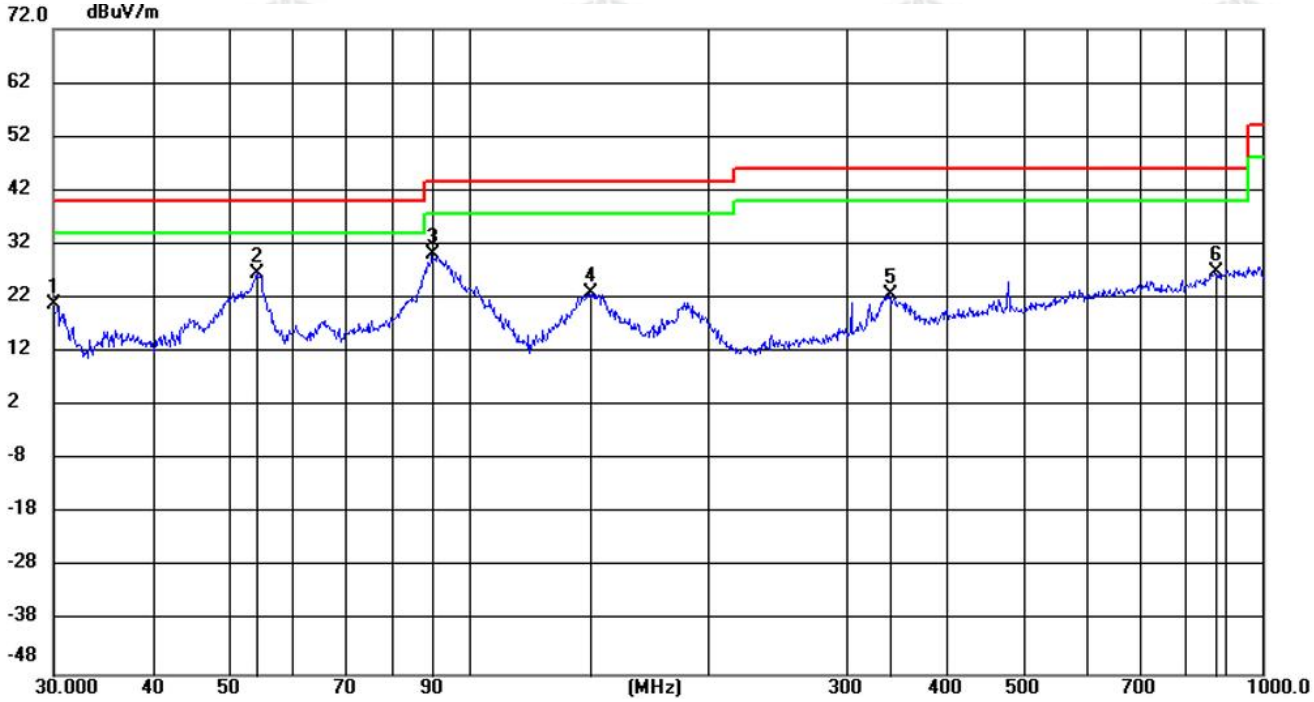

No.	Mk.	Freq.	Reading Level	Correct Factor	Measure-ment	Limit	Margin		Antenna Height	Table Degree	
		MHz	dBuV	dB/m	dBuV/m	dBuV/m	dB	Detector	cm	degree	Comment
1		30.0000	8.52	12.46	20.98	40.00	-19.02	QP	100	65	
2	*	54.0995	12.52	14.18	26.70	40.00	-13.30	QP	100	230	
3		90.1730	18.59	11.58	30.17	43.50	-13.33	QP	200	5	
4		141.9257	12.70	10.35	23.05	43.50	-20.45	QP	200	354	
5		338.7562	4.91	17.63	22.54	46.00	-23.46	QP	100	83	
6		874.6333	0.43	26.34	26.77	46.00	-19.23	QP	100	134	

Remark:

1. Margin=Measurement(Level)-Limit.
2. Measurement(Level)=Reading Level+Correct Factor.
3. In the test results, an asterisk (*) indicates Maximum Data, a cross (X) indicates over Limit, an exclamation mark (!) indicates over -6dB margin Limit.

Vertical:

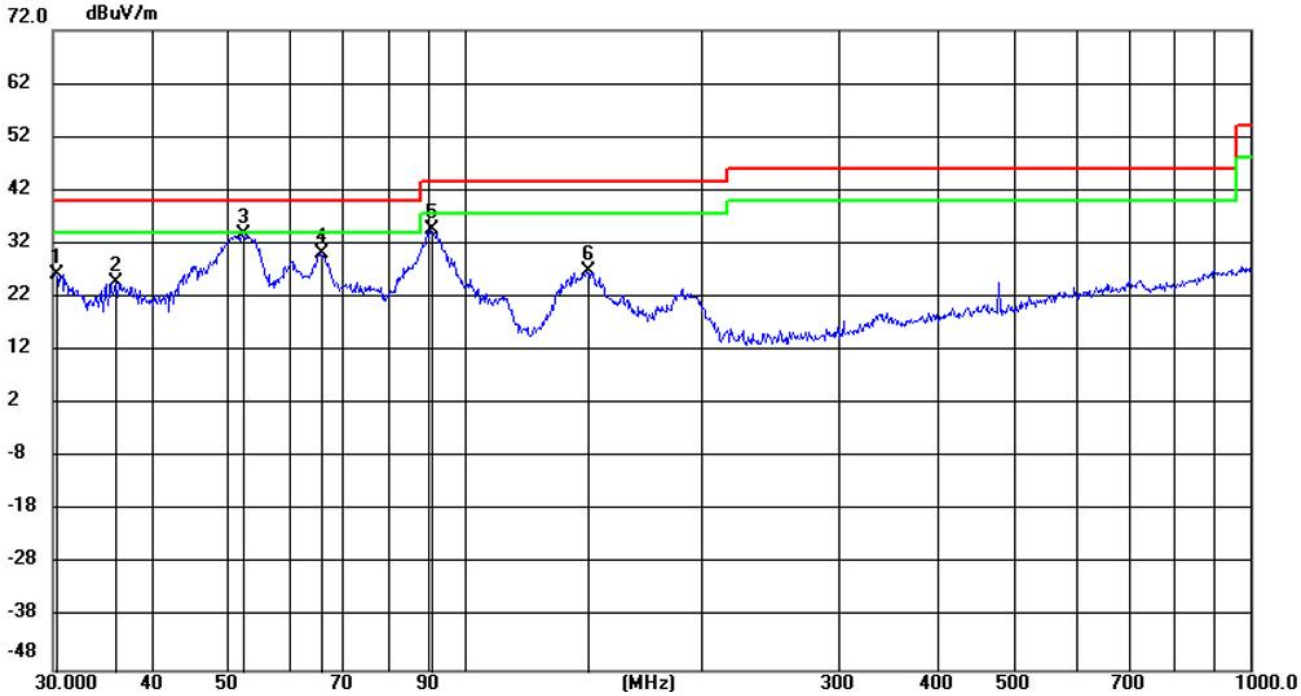

No.	Mk.	Freq.	Reading Level	Correct Factor	Measure-ment	Limit	Margin		Antenna Height	Table Degree	
		MHz	dBuV	dB/m	dBuV/m	dBuV/m	dB	Detector	cm	degree	Comment
1		30.2854	13.73	12.48	26.21	40.00	-13.79	QP	100	65	
2		36.0070	11.81	12.90	24.71	40.00	-15.29	QP	100	161	
3	*	52.2628	19.35	14.39	33.74	40.00	-6.26	QP	100	353	
4		65.7685	17.97	12.07	30.04	40.00	-9.96	QP	100	267	
5		90.7757	22.89	11.69	34.58	43.50	-8.92	QP	100	22	
6		143.5272	16.43	10.33	26.76	43.50	-16.74	QP	100	30	

Remark:

1. Margin=Measurement(Level)-Limit.
2. Measurement(Level)=Reading Level+Correct Factor.
3. In the test results, an asterisk (*) indicates Maximum Data, a cross (X) indicates over Limit, an exclamation mark (!) indicates over -6dB margin Limit.

Radiated Spurious Emission above 1GHz:

Mode:			Bluetooth LE GFSK Transmitting			Channel:		2402 MHz	
NO	Freq. [MHz]	Factor [dB]	Reading [dBμV]	Level [dBμV/m]	Limit [dBμV/m]	Margin [dB]	Result	Polarity	Remark
1	1442.0295	13.18	36.68	49.86	74.00	24.14	Pass	H	PK
2	1808.0539	14.25	36.13	50.38	74.00	23.62	Pass	H	PK
3	4803.8703	-8.60	65.41	56.81	74.00	17.19	Pass	H	PK
4	6040.2527	-5.09	48.14	43.05	74.00	30.95	Pass	H	PK
5	7987.1325	-1.37	53.95	52.58	74.00	21.42	Pass	H	PK
6	11980.9987	3.12	51.47	54.59	74.00	19.41	Pass	H	PK
7	4804.5203	-8.60	60.72	52.12	54.00	1.88	Pass	H	AV
8	11981.6488	3.12	48.27	51.39	54.00	2.61	Pass	H	AV
9	1477.0985	13.06	36.78	49.84	74.00	24.16	Pass	V	PK
10	1998.4666	14.76	36.53	51.29	74.00	22.71	Pass	V	PK
11	4803.8703	-8.60	63.96	55.36	74.00	18.64	Pass	V	PK
12	6374.375	-4.36	50.20	45.84	74.00	28.16	Pass	V	PK
13	9607.0405	1.38	46.04	47.42	74.00	26.58	Pass	V	PK
14	11980.9987	3.12	50.63	53.75	74.00	20.25	Pass	V	PK
15	4804.5203	-8.60	58.99	50.39	54.00	3.61	Pass	V	AV
16	11981.6488	3.12	47.28	50.40	54.00	3.60	Pass	V	AV

Mode:			Bluetooth LE GFSK Transmitting			Channel:		2480 MHz	
NO	Freq. [MHz]	Factor [dB]	Reading [dBμV]	Level [dBμV/m]	Limit [dBμV/m]	Margin [dB]	Result	Polarity	Remark
1	1336.6891	12.39	36.94	49.33	74.00	24.67	Pass	H	PK
2	2012.6008	14.67	37.08	51.75	74.00	22.25	Pass	H	PK
3	3814.5043	-12.34	52.91	40.57	74.00	33.43	Pass	H	PK
4	4959.8807	-8.05	56.55	48.50	74.00	25.50	Pass	H	PK
5	7987.1325	-1.37	53.71	52.34	74.00	21.66	Pass	H	PK
6	11980.9987	3.12	50.42	53.54	74.00	20.46	Pass	H	PK
7	1444.2963	13.14	36.47	49.61	74.00	24.39	Pass	V	PK
8	1869.7913	14.52	36.96	51.48	74.00	22.52	Pass	V	PK
9	3722.8482	-12.82	53.66	40.84	74.00	33.16	Pass	V	PK
10	4959.8807	-8.05	55.20	47.15	74.00	26.85	Pass	V	PK
11	6382.1755	-4.36	50.80	46.44	74.00	27.56	Pass	V	PK
12	11980.9987	3.12	49.56	52.68	74.00	21.32	Pass	V	PK

Remark:

1) The field strength is calculated by adding the Antenna Factor, Cable Factor & Preamplifier. The basic equation with a sample calculation is as follows:

   Final Test Level =Receiver Reading + Antenna Factor + Cable Factor – Preamplifier Factor

2) Scan from 9kHz to 25GHz, the disturbance above 10GHz and below 30MHz was very low. As shown in this section, for frequencies above 1GHz, the field strength limits are based on average limits. However, the

peak field strength of any emission shall not exceed the maximum permitted average limits specified above by more than 20 dB under any condition of modulation. So, only the peak measurements were shown in the report.

Restricted bands:

Test plot as follows:

Test_Mode	BLE 1M GFSK Transmitting	Test_Frequency	2402Mhz
Tset_Engineer	chenjun	Test_Date	2025/10/28
Remark	23.66°C60.82%/		

Test Graph

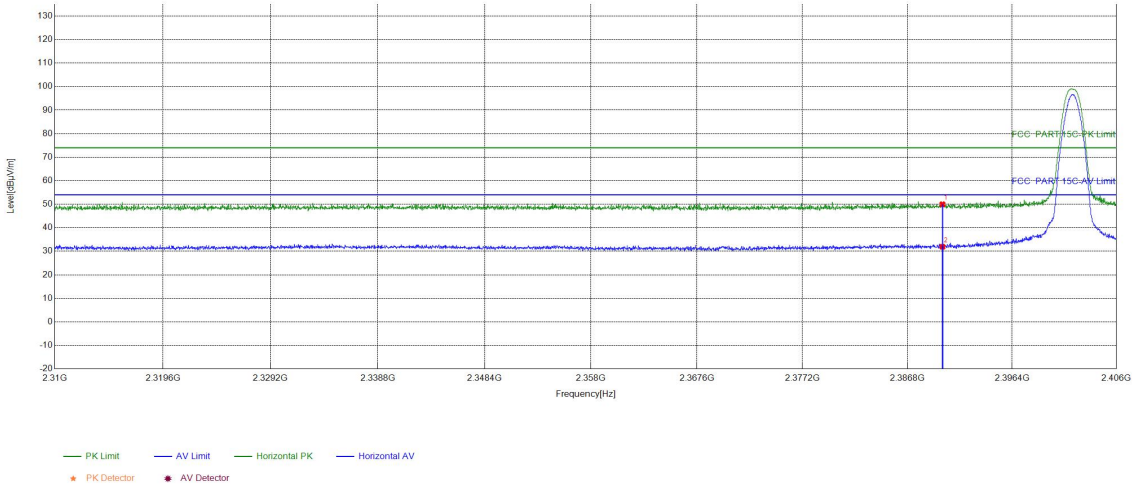

Suspected List									
NO	Freq. [MHz]	Factor [dB]	Reading [dBμV]	Level [dBμV/m]	Limit [dBμV/m]	Margin [dB]	Result	Polarity	Remark
1	2390	15.96	34.01	49.97	74.00	24.03	PASS	Horizontal	PK
2	2390	15.96	15.96	31.92	54.00	22.08	PASS	Horizontal	AV

Test_Mode	BLE 1M GFSK Transmitting	Test_Frequency	2402Mhz
Tset_Engineer	chenjun	Test_Date	2025/10/28
Remark	23.66°C60.82%/		

Test Graph

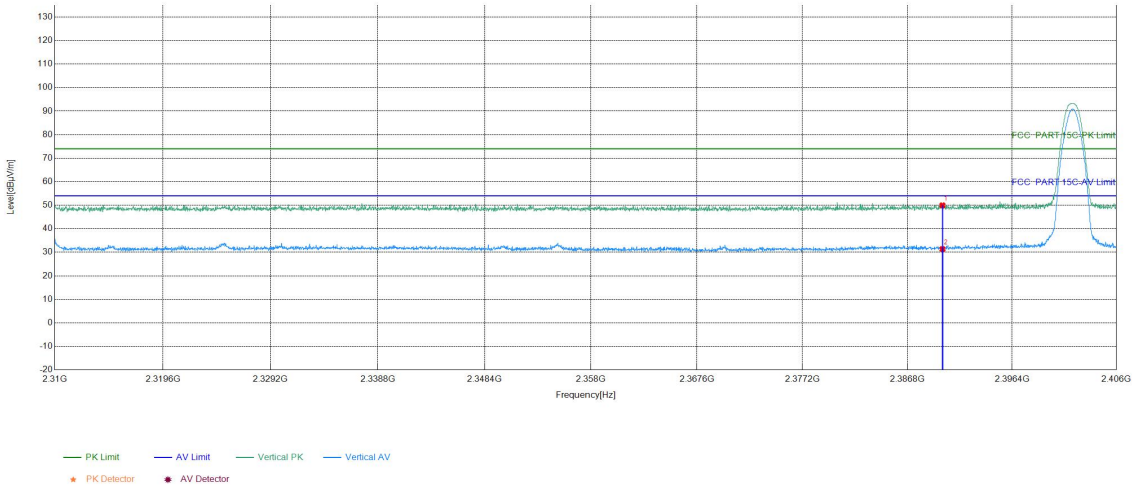

Suspected List									
NO	Freq. [MHz]	Factor [dB]	Reading [dBµV]	Level [dBµV/m]	Limit [dBµV/m]	Margin [dB]	Result	Polarity	Remark
1	2390	15.96	34.01	49.97	74.00	24.03	PASS	Vertical	PK
2	2390	15.96	15.41	31.37	54.00	22.63	PASS	Vertical	AV

Test_Mode	BLE 1M GFSK Transmitting	Test_Frequency	2480Mhz
Tset_Engineer	chenjun	Test_Date	2025/10/28
Remark	23.66°C60.82%/		

Test Graph

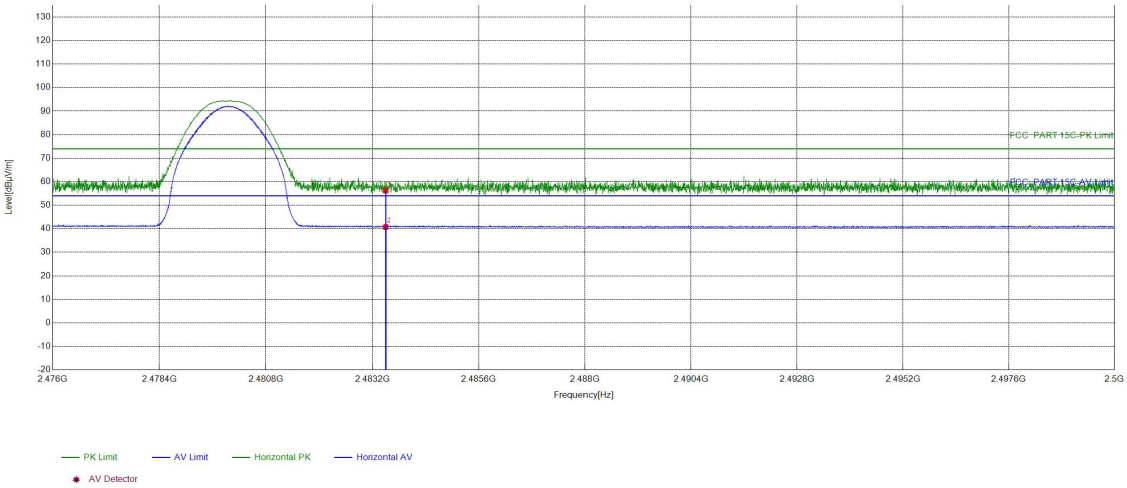

Suspected List									
NO	Freq. [MHz]	Factor [dB]	Reading [dBµV]	Level [dBµV/m]	Limit [dBµV/m]	Margin [dB]	Result	Polarity	Remark
1	2483.5	16.29	39.95	56.24	74.00	17.76	PASS	Horizontal	PK
2	2483.5	16.29	24.43	40.72	54.00	13.28	PASS	Horizontal	AV

Test_Mode	BLE 1M GFSK Transmitting	Test_Frequency	2480Mhz
Tset_Engineer	chenjun	Test_Date	2025/10/28
Remark	23.66°C60.82%/		

Test Graph

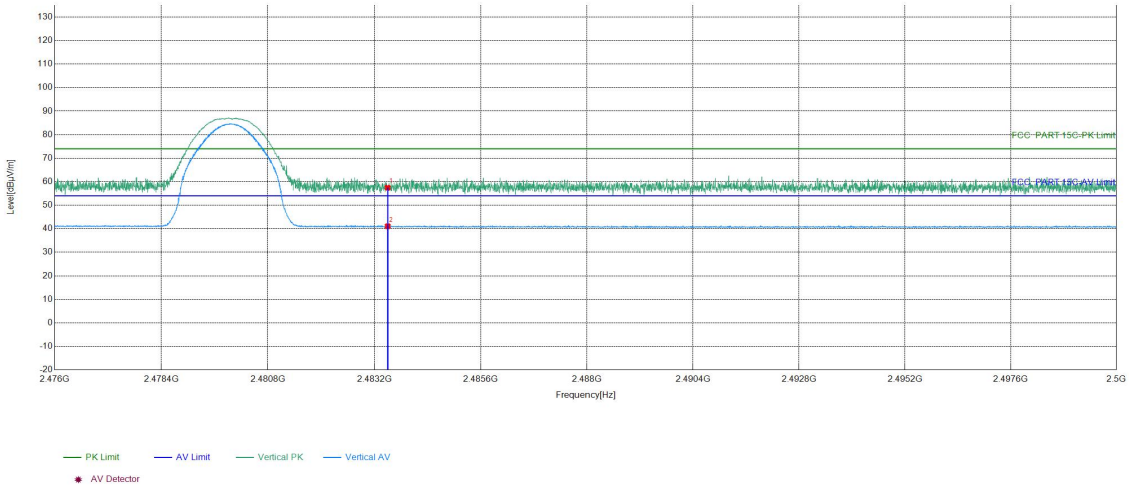

Suspected List									
NO	Freq. [MHz]	Factor [dB]	Reading [dBµV]	Level [dBµV/m]	Limit [dBµV/m]	Margin [dB]	Result	Polarity	Remark
1	2483.5	16.29	41.18	57.47	74.00	16.53	PASS	Vertical	PK
2	2483.5	16.29	24.77	41.06	54.00	12.94	PASS	Vertical	AV

Note:
The field strength is calculated by adding the Antenna Factor, Cable Factor & Preamplifier. The basic equation with a sample calculation is as follows:
Final Test Level =Receiver Reading -Correct Factor
Correct Factor = Preamplifier Factor– Antenna Factor–Cable Factor

6 Appendix A

Refer to Appendix: Bluetooth LE of EED32R81737801.

Statement

1. This report is considered invalid without approved signature, special seal and the seal on the perforation;

2. The Company Name shown on Report and Address, the sample(s) and sample information was/were provided by the applicant who should be responsible for the authenticity which CTI hasn't verified;

3. The result(s) shown in this report refer(s) only to the sample(s) tested;

4. Unless otherwise stated,the decision rule for conformity reporting is based on Binary Statement for Simple Acceptance Rule stated in ILAC-G8:09/2019/CNAS-GL015:2022;

5. Without written approval of CTI, this report can't be reproduced except in full;

*** End of Report ***