FCC TEST REPORT

FCC ID:2BS6N-W596CHR

Applicant:	Shenzhen Million Concept Wearable Co., Ltd
Address:	405 Yanluo Anxin building, Shanmen community,Yanluo street, Bao'an District, Shenzhen
Manufacturer:	Guangxi Million Concept BHL Co., Ltd
Address:	Linjiang Industrial Park, Pingnan County, Guigang, Guangxi Province
EUT:	W596 Charging case
Trade Mark:	Vitahunt
Model Number:	W596
Date of Receipt:	Sep. 27, 2025
Test Date:	Sep. 27, 2025 to Oct. 10, 2025
Date of Report:	Oct. 10, 2025
Prepared By:	Shenzhen DL Testing Technology Co., Ltd.
Address:	101-201, Comprehensive Building, Tongzhou Electronics Longgang Factory Area, No.1 Baolong Fifth Road, Baolong Community, Baolong Street, Longgang District, Shenzhen, China
Applicable Standards:	FCC CFR Title 47 Part 15 Subpart C
Test Result:	Pass
Report Number:	DLE-251017008R

Prepared (Test Engineer):	Dimon Tan	Dimon Tan
Reviewer (Supervisor):	Jack Bu	Jack Bu
Approved (Manager):	Jade Yang	Jade Yang

Shenzhen DL Testing Technology Co.,Ltd. Approved

This test report is based on a single evaluation of one sample of above mentioned products. It is not permitted to be duplicated in extracts without written approval of Shenzhen DL Testing Technology Co., Ltd.

TABLE OF CONTENTS

1. VERSION **3**
2. TEST SUMMARY **4**
2.1 TEST FACILITY 5
2.2 MEASUREMENT UNCERTAINTY 5
3. GENERAL INFORMATION **6**
3.1 GENERAL DESCRIPTION OF EUT 6
3.2 TEST MODE 7
3.3 BLOCK DIAGRAM OF EUT CONFIGURATION 9
3.4 TEST CONDITIONS 10
3.5 DESCRIPTION OF SUPPORT UNITS (CONDUCTED MODE) 10
3.6 EQUIPMENTS LIST FOR ALL TEST ITEMS 11
4. CONDUCTED EMISSION TEST **12**
4.1 CONDUCTED EMISSION MEASUREMENT 12
4.1.1 POWER LINE CONDUCTED EMISSION Limits 12
4.1.2 TEST PROCEDURE 12
4.1.3 DEVIATION FROM TEST STANDARD 12
4.1.4 TEST SETUP 13
4.1.5 EUT OPERATING CONDITIONS 13
4.1.6 TEST RESULT 14
5. RADIATED EMISSION MEASUREMENT **16**
5.1 RADIATED EMISSION LIMITS 16
5.2 ANECHOIC CHAMBER TEST SETUP DIAGRAM 17
5.3 TEST PROCEDURE 18
5.4 DEVIATION FROM TEST STANDARD 18
5.5 TEST RESULT 18
6. 20DB BANDWIDTH TEST **22**
6.1 TEST PROCEDURE 22
6.2 LIMIT 22
6.3 TEST SETUP 22
6.4 DEVIATION FROM STANDARD 22
6.5 TEST RESULT 23
7. ANTENNA REQUIREMENT **24**
8. TEST SETUP PHOTO **25**
9. EUT CONSTRUCTIONAL DETAILS **25**

1. VERSION

Report No.	Version	Description	Approved
DLE-251017008R	Rev.01	Initial issue of report	Oct. 10, 2025

2. TEST SUMMARY

Test Item	Section in CFR 47	Result
Antenna requirement	15.203	Pass
AC Power Line Conducted Emission	15.207	Pass
Spurious Emission	15.209(a)(f)	Pass
20dB Bandwidth	15.215	Pass

NOTE:

(1)" N/A" denotes test is not applicable in this Test Report

2.1 TEST FACILITY

Shenzhen DL Testing Technology Co., Ltd.
Add. : 101-201, Comprehensive Building, Tongzhou Electronics Longgang Factory Area, No.1 Baolon Fifth Road, Baolong Community, Baolong Street, Longgang District, Shenzhen, China

FCC Test Firm Registration Number: 854456
Designation Number: CN1307
IC Registered No.: 27485
CAB identifier: CN0118

2.2 MEASUREMENT UNCERTAINTY

The reported uncertainty of measurement y ± U, where expended uncertainty U is based on a standard uncertainty multiplied by a coverage factor of k=2, providing a level of confidence of approximately 95 %.

No.	Item	Uncertainty
1	3m camber Radiated spurious emission(9KHz-30MHz)	U=4.5dB
2	3m camber Radiated spurious emission(30MHz-1GHz)	U=4.8dB
3	3m chamber Radiated spurious emission(1GHz-6GHz)	U=4.9dB
4	3m chamber Radiated spurious emission(6GHz-40GHz)	U=5.0dB
5	Conducted disturbance	U=3.2dB
6	RF conducted Spurious Emission	U=2.2dB
7	RF Occupied Bandwidth	U=1.8MHz
8	humidity uncertainty	U=5.3%
9	Temperature uncertainty	U=0.59℃

3. GENERAL INFORMATION

3.1 GENERAL DESCRIPTION OF EUT

Product Name:	Magnetic Wireless Charging Pod
Model No.:	W596
Serial No.:	N/A
Model Difference:	N/A
Hardware Version:	V 1.0
Software Version:	V 1.1
Operation Frequency:	111kHz ~ 350kHz
Modulation Type:	ASK
Antenna Type:	Loop Coil Antenna
Antenna Gain:	0dBi
Ratings:	Input: 5V1A
Transmitting Mode:	Keep the EUT in continuously wireless charging mode

3.2 TEST MODE

To investigate the maximum EMI emission characteristics generates from EUT, the test system was pre-scanning tested base on the consideration of following EUT operation mode or test configuration mode which possible have effect on EMI emission level. Each of these EUT operation mode(s) or test configuration mode(s) mentioned above was evaluated respectively.

EUT mode of operation before folding:

Test Modes:	Description:
Phone Coil	Mode 1 :AC/DC Adapter+EUT + ring (Battery Status:<1%)
	Mode 2: AC/DC Adapter+EUT + ring (Battery Status:<50%)
	Mode 3: AC/DC Adapter+EUT + ring (Battery Status:<100%)
No Loads	AC/DC Adapter+EUT

3.3 BLOCK DIAGRAM OF EUT CONFIGURATION

Conducted Emission

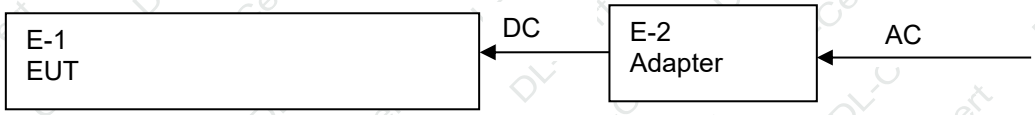

Radiated Emission

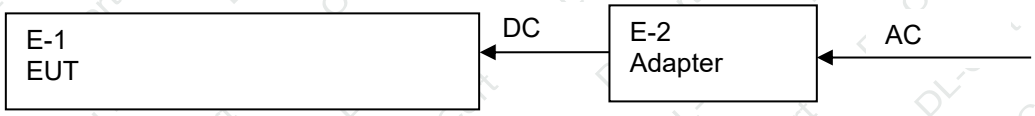

3.4 TEST CONDITIONS

Temperature: 23~26℃

Relative Humidity: 54~63 %

3.5 DESCRIPTION OF SUPPORT UNITS (CONDUCTED MODE)

The EUT has been tested as an independent unit together with other necessary accessories or support units. The following support units or accessories were used to form a representative test configuration during the tests.

Item	Equipment	Mfr/Brand	Model/Type No.	Series No.	Note
E-1	W596 Charging case	Vitahunt	W596	N/A	EUT
E-2	AC/DC Adapter	N/A	X569	N/A	Auxiliary

Item	Shielded Type	Ferrite Core	Length	Note
C1	NO	NO	0.8M	DC cable unshielded

Note:

(1) The support equipment was authorized by Declaration of Confirmation.
(2) For detachable type I/O cable should be specified the length in cm in『Length』column.
(3) “YES” is means “shielded” “with core”; “NO” is means “unshielded” “without core”.

3.6 EQUIPMENTS LIST FOR ALL TEST ITEMS

Radiation test, Band-edge test and 6db bandwidth test equipment

Item	Equipment	Manufacturer	Type No.	Serial No.	Last calibration	Calibrated until
1	Spectrum Analyzer (9kHz-26.5GHz)	Agilent	E4408B	MY50140780	Nov. 01, 2024	Oct. 31, 2025
2	Test Receiver (9kHz-7GHz)	R&S	ESRP7	101393	Nov. 01, 2024	Oct. 31, 2025
3	Bilog Antenna (30MHz-1GHz)	R&S	VULB9162	00306	Nov. 01, 2024	Oct. 31, 2025
4	Horn Antenna (1GHz-18GHz)	Schwarzbeck	BBHA9120D	02139	Nov. 01, 2024	Oct. 31, 2025
5	Horn Antenna (18GHz-40GHz)	A.H. Systems	SAS-574	588	Nov. 01, 2024	Oct. 31, 2025
6	Amplifier (9KHz-6GHz)	Schwarzbeck	BBV9743B	00153	Nov. 01, 2024	Oct. 31, 2025
7	Amplifier (1GHz-18GHz)	EMEC	EM01G8GA	00270	Nov. 01, 2024	Oct. 31, 2025
8	Amplifier (18GHz-40GHz)	Quanjuda	DLE-161	97	Nov. 01, 2024	Oct. 31, 2025
9	Loop Antenna (9KHz-30MHz)	Schwarzbeck	FMZB1519B	00014	Nov. 01, 2024	Oct. 31, 2025
10	RF cables1 (9kHz-1GHz)	ChengYu	966	004	Nov. 01, 2024	Oct. 31, 2025
11	RF cables2 (1GHz-40GHz)	ChengYu	966	003	Nov. 01, 2024	Oct. 31, 2025
12	Antenna connector	Florida RF Labs	N/A	RF 01#	Nov. 01, 2024	Oct. 31, 2025
13	Power probe	KEYSIGHT	U2021XA	MY55210018	Nov. 01, 2024	Oct. 31, 2025
14	Signal Analyzer 9kHz-26.5GHz	Agilent	N9020A	MY55370280	Nov. 01, 2024	Oct. 31, 2025
15	Test Receiver 20kHz-40GHz	R&S	ESU 40	100376	Nov. 01, 2024	Oct. 31, 2025
16	D.C. Power Supply	LongWei	PS-305D	010964729	Nov. 01, 2024	Oct. 31, 2025

Conduction Test equipment

Item	Equipment	Manufacturer	Type No.	Serial No.	Last calibration	Calibrated until
1	843 Shielded Room	ChengYu	843 Room	843	Nov. 01, 2024	Oct. 31, 2025
2	EMI Receiver	R&S	ESR	101421	Nov. 01, 2024	Oct. 31, 2025
3	LISN	R&S	ENV216	102417	Nov. 01, 2024	Oct. 31, 2025
4	843 Cable 1#	ChengYu	CE Cable	001	Nov. 01, 2024	Oct. 31, 2025

Other

Item	Name	Manufacturer	Model	Software version
1	EMC Conduction Test System	FALA	EZ_EMC	EMC-CON 3A1.1
2	EMC radiation test system	FALA	EZ_EMC	FA-03A2
3	RF test system	MAIWEI	MTS8310	2.0.0.0
4	RF communication test system	MAIWEI	MTS8200	2.0.0.0

4. CONDUCTED EMISSION TEST

4.1 CONDUCTED EMISSION MEASUREMENT

Test Requirement:	FCC Part15 C Section 15.207
Test Method:	ANSI C63.10:2020
Test Frequency Range:	150KHz to 30MHz
Receiver setup:	RBW=9KHz, VBW=30KHz, Sweep time=auto

4.1.1 POWER LINE CONDUCTED EMISSION Limits

FREQUENCY (MHz)	Limit (dBuV)		Standard
	Quas-peak	Average	
0.15 -0.5	66 - 56 *	56 - 46 *	FCC
0.50 -5.0	56.00	46.00	FCC
5.0 -30.0	60.00	50.00	FCC

Note:

(1) *Decreases with the logarithm of the frequency.

4.1.2 TEST PROCEDURE

a. The EUT was placed 0.8 meters from the horizontal ground plane with EUT being connected to the power mains through a line impedance stabilization network (LISN). All other support equipments powered from additional LISN(s). The LISN provide 50 Ohm/ 50uH of coupling impedance for the measuring instrument.
b. Interconnecting cables that hang closer than 40 cm to the ground plane shall be folded back and forth in the center forming a bundle 30 to 40 cm long.
c. I/O cables that are not connected to a peripheral shall be bundled in the center. The end of the cable may be terminated, if required, using the correct terminating impedance. The overall length shall not exceed 1 m.
d. LISN at least 80 cm from nearest part of EUT chassis.
e. For the actual test configuration, please refer to the related Item –EUT Test Photos.

4.1.3 DEVIATION FROM TEST STANDARD

No deviation

4.1.4 TEST SETUP

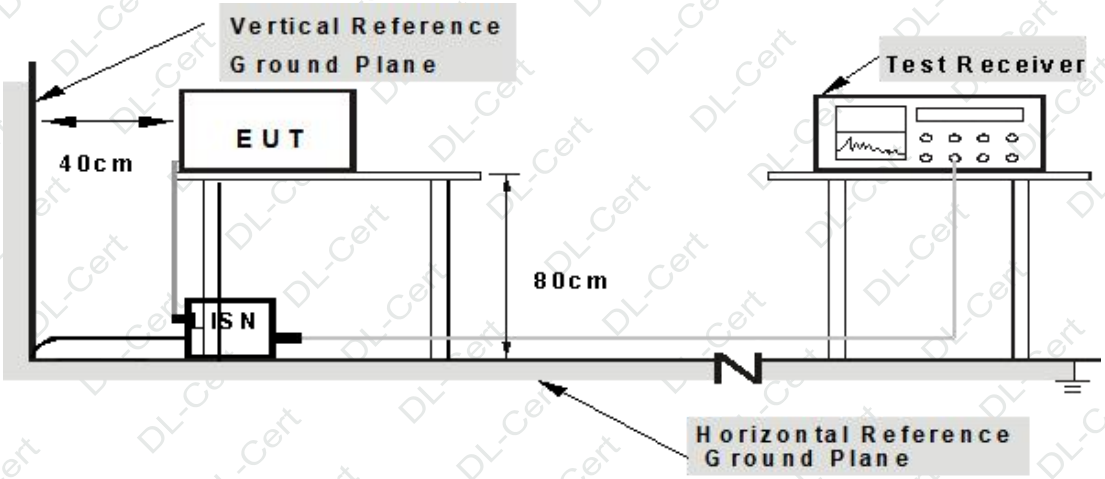

Note: 1.Support units were connected to second LISN.
2.Both of LISNs (AMN) are 80 cm from EUT and at least 80 from other units and other metal planes

4.1.5 EUT OPERATING CONDITIONS

The EUT was configured for testing in a typical fashion (as a customer would normally use it). The EUT has been programmed to continuously transmit during test. This operating condition was tested and used to collect the included data.

4.1.6 TEST RESULT

Temperature :	26℃	Relative Humidity :	54%
Pressure :	101kPa	Phase :	L
Test Voltage :	DC 5V from adapter input AC 120V/60Hz.	Test Mode :	Mode 1

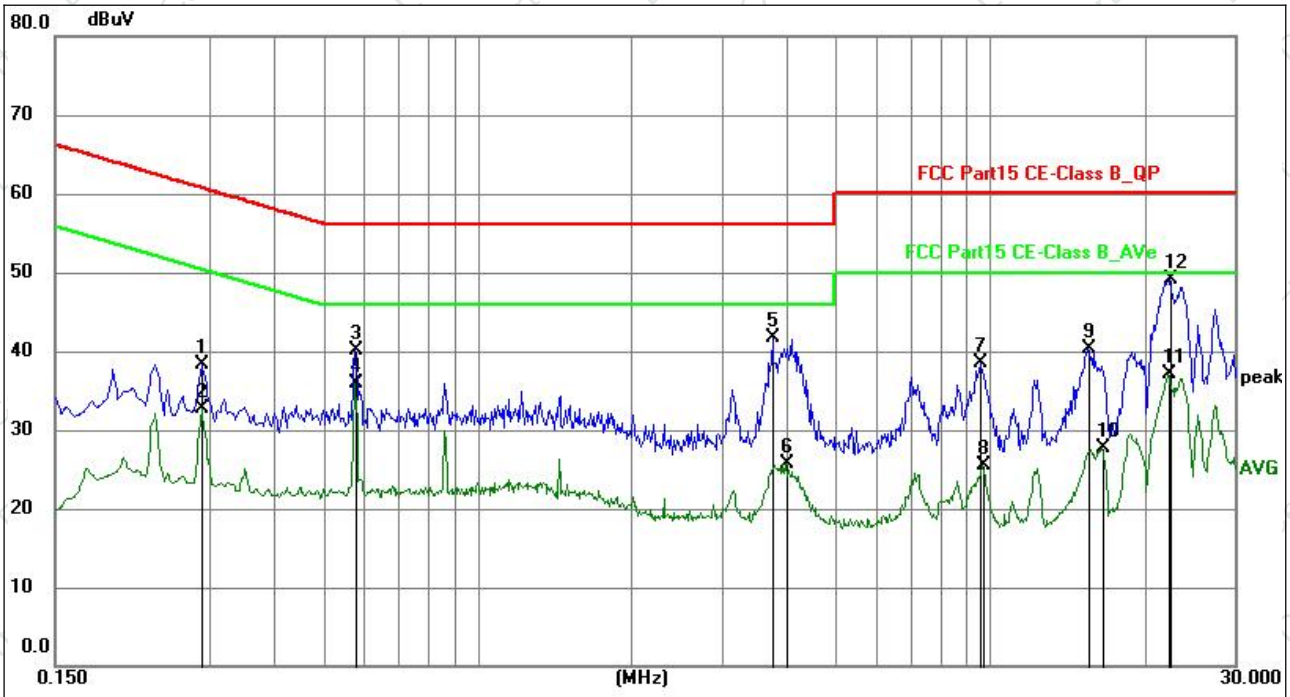

No.	Frequency (MHz)	Reading (dBuV)	Factor (dB)	Level (dBuV)	Limit (dBuV)	Margin (dB)	Detector	P/F	Remark
1	0.2893	17.87	20.35	38.22	60.54	-22.32	QP	P	
2	0.2893	12.41	20.35	32.76	50.54	-17.78	AVG	P	
3	0.5774	19.86	20.29	40.15	56.00	-15.85	QP	P	
4	0.5774	15.59	20.29	35.88	46.00	-10.12	AVG	P	
5	3.7724	21.30	20.34	41.64	56.00	-14.36	QP	P	
6	3.9929	5.41	20.34	25.75	46.00	-20.25	AVG	P	
7	9.5862	18.04	20.45	38.49	60.00	-21.51	QP	P	
8	9.6852	4.98	20.46	25.44	50.00	-24.56	AVG	P	
9	15.4725	19.87	20.49	40.36	60.00	-19.64	QP	P	
10	16.4983	7.25	20.50	27.75	50.00	-22.25	AVG	P	
11	22.2000	16.45	20.56	37.01	50.00	-12.99	AVG	P	
12	22.5195	28.47	20.57	49.04	60.00	-10.96	QP	P	

Notes:
1.An initial pre-scan was performed on the line and neutral lines with peak detector.
2.Quasi - Peak and Average measurement were performed at the frequencies with maximized peak emission.
3.Final Level = Reading level + Correct Factor.
4.Correct Factor = Lisn factor+ Cable loss factor + limiter factor.
5.Margin = Measurement Level-Limit.
6.All test modes were tested, with only the worst Mode 1 recorded.

Temperature :	26℃	Relative Humidity :	54%
Pressure :	101kPa	Phase :	N
Test Voltage :	DC 5V from adapter input AC 120V/60Hz.	Test Mode :	Mode 1

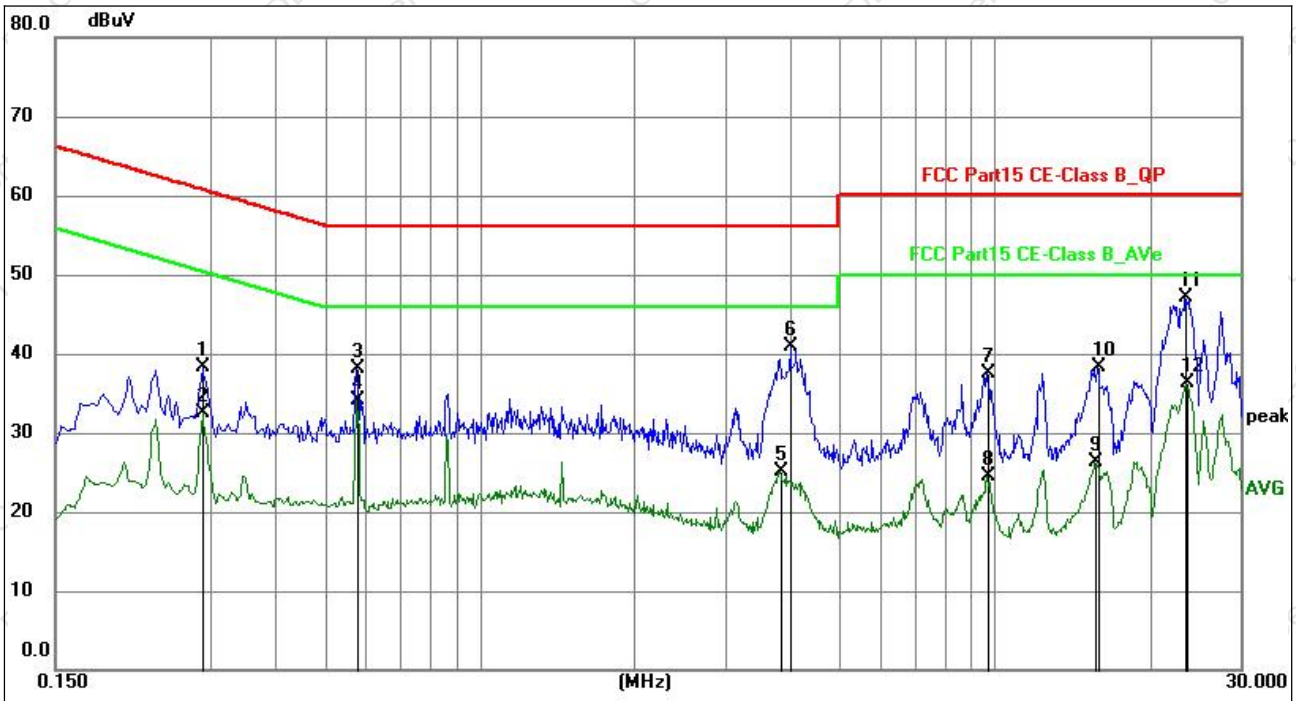

No.	Frequency (MHz)	Reading (dBuV)	Factor (dB)	Level (dBuV)	Limit (dBuV)	Margin (dB)	Detector	P/F	Remark
1	0.2893	17.95	20.35	38.30	60.54	-22.24	QP	P	
2	0.2893	12.15	20.35	32.50	50.54	-18.04	AVG	P	
3	0.5774	17.76	20.30	38.06	56.00	-17.94	QP	P	
4	0.5774	13.87	20.30	34.17	46.00	-11.83	AVG	P	
5	3.8355	4.69	20.33	25.02	46.00	-20.98	AVG	P	
6	4.0109	20.48	20.33	40.81	56.00	-15.19	QP	P	
7	9.6674	17.04	20.46	37.50	60.00	-22.50	QP	P	
8	9.6674	4.00	20.46	24.46	50.00	-25.54	AVG	P	
9	15.7155	5.83	20.50	26.33	50.00	-23.67	AVG	P	
10	15.8773	17.85	20.50	38.35	60.00	-21.65	QP	P	
11	23.4329	26.57	20.62	47.19	60.00	-12.81	QP	P	
12	23.5365	15.65	20.63	36.28	50.00	-13.72	AVG	P	

Notes:
1.An initial pre-scan was performed on the line and neutral lines with peak detector.
2.Quasi - Peak and Average measurement were performed at the frequencies with maximized peak emission.
3.Final Level = Reading level + Correct Factor.
4.Correct Factor = Lisn factor+ Cable loss factor + limiter factor.
5.Margin = Measurement Level-Limit.
6.All test modes were tested, with only the worst Mode 1 recorded.

5. RADIATED EMISSION MEASUREMENT

Test Requirement:	FCC Part15 C Section 15.209
Test Method:	ANSI C63.10:2020
Test Frequency Range:	9kHz to 1GHz
Test site:	Measurement Distance: 3m
Receiver setup:	

Frequency	Detector	RBW	VBW	Value
9KHz-150KHz	Quasi-peak	200Hz	600Hz	Quasi-peak
150KHz-30MHz	Quasi-peak	9KHz	30KHz	Quasi-peak
30MHz-1GHz	Quasi-peak	100KHz	300KHz	Quasi-peak
Above 1GHz	Peak	1MHz	3MHz	Peak
	Peak	1MHz	10Hz	Average

5.1 RADIATED EMISSION LIMITS

Limits for frequency below 30MHz

Frequency	Limit (uV/m)	Measurement Distance(m)	Remark
0.009-0.490	2400/F(kHz)	300	Quasi-peak Value
0.490-1.705	24000/F(kHz)	30	Quasi-peak Value
1.705-30	30	30	Quasi-peak Value

Limits for frequency Above 30MHz

Frequency	Limit (dBuV/m @3m)	Remark
30MHz-88MHz	40.00	Quasi-peak Value
88MHz-216MHz	43.50	Quasi-peak Value
216MHz-960MHz	46.00	Quasi-peak Value
960MHz-1GHz	54.00	Quasi-peak Value
Above 1GHz	54.00	Average Value
	74.00	Peak Value

5.2 ANECHOIC CHAMBER TEST SETUP DIAGRAM

(A) Radiated Emission Test-Up Frequency Below 30MHz

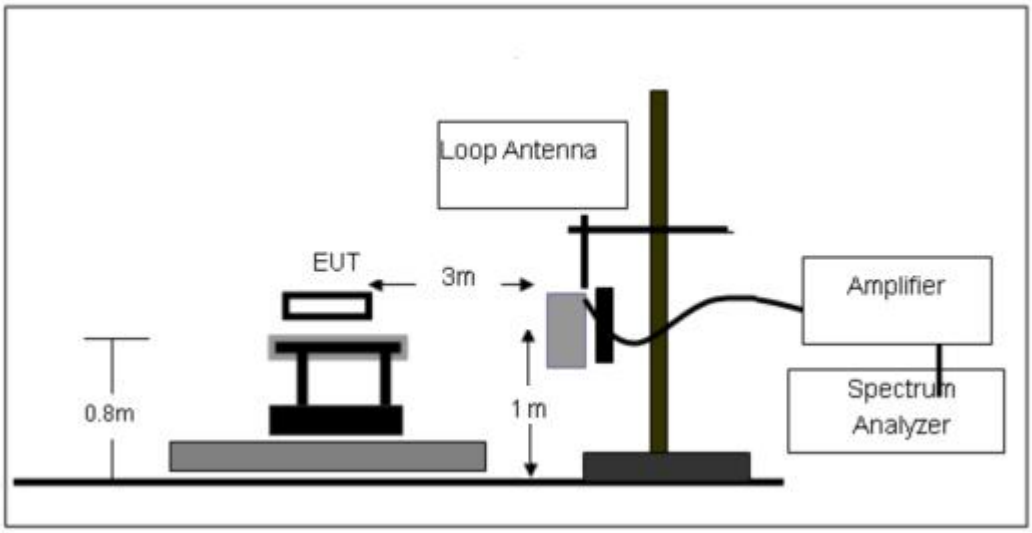

(B) Radiated Emission Test-Up Frequency 30MHz~1GHz

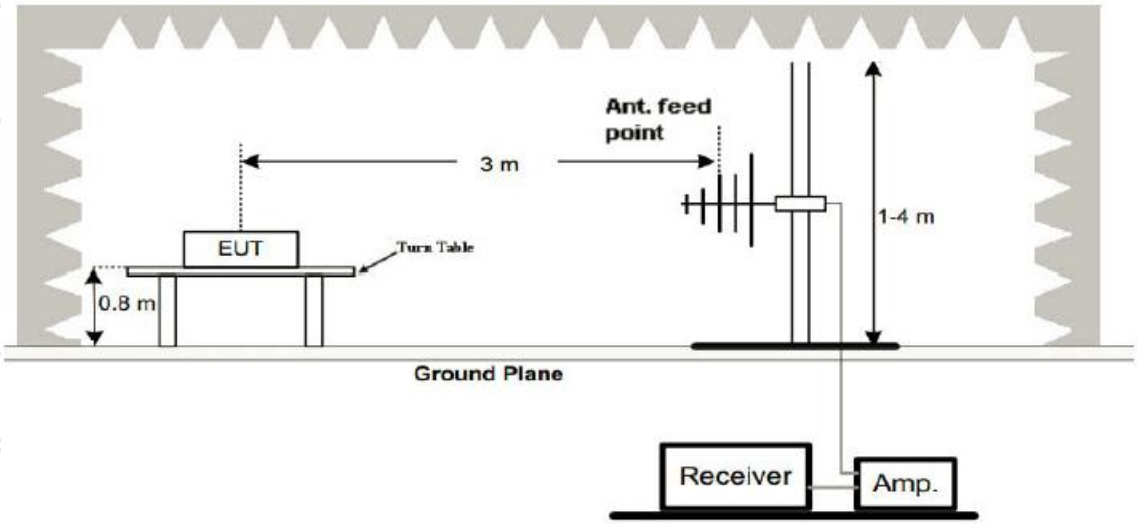

The radiated emission tests were performed in the 3 meters chamber test site, using the setup accordance with the ANSI C63.10-2020. The specification used was the FCC 15.209 and FCC 15.205 limits.

5.3 TEST PROCEDURE

Below 30MHz
a. The EUT was placed on the top of a rotating table 0.8 meters above the ground at a 3 meterssemi-anechoic chamber. The table was rotated 360 degrees to determine the position of thehighest radiation.
b. The EUT was set 3 meters away from the interference-receiving loop antenna and in thecenter of a loop antenna, which was mounted on the top of a variable-height antenna tower.
c. For each suspected emission, the EUT was arranged to its worst case, the height ofinterference-receiving loop antenna centre is 1 meter above the ground, and the rotatable tablewas turned from 0 degrees to 360 degrees to find the maximum reading.
d. Both coaxial (loop plane perpendicular to the ground plane and to the measurement axis) andcoplanar (loop plane perpendicular to the ground plane and coplanar with the measurement axis)polarizations of the antenna are set to make the measurement.
e. The test-receiver system was set to quasi-peak detect function and specified bandwidth withmaximum hold mode when the test frequency is below 1 GHz.

30MHz-1GHz
a. The EUT was placed on the top of a rotating table 0.8 meters above the ground at a 3 meterssemi-anechoic chamber. The table was rotated 360 degrees to determine the position of thehighest radiation.
b. The EUT was set 3 meters away from the interference-receiving antenna, which was mountedon the top of a variable-height antenna tower.
c. The antenna is a broadband antenna, and its height is varied from one meter to four metersabove the ground to determine the maximum value of the field strength. Both horizontal andvertical polarizations of the antenna are set to make the measurement.
d. For each suspected emission, the EUT was arranged to its worst case and then the antennawas tuned to heights from 1 meter to 4 meters and the rotatable table was turned from 0 degreesto 360 degrees to find the maximum reading.
e. The test-receiver system was set to quasi-peak detect function and specified bandwidth withmaximum hold mode when the test frequency is below 1 GHz.

5.4 DEVIATION FROM TEST STANDARD

No deviation

5.5 TEST RESULT

Measurement data:

Note: Limit dBuV/m @3m = Limit dBuV/m @300m+ 80
Limit dBuV/m @3m = Limit dBuV/m @30m + 40

ANT-1 - 9 kHz~30 MHz

Temperature :	26℃	Relative Humidity :	54%
Pressure :	101 kPa	Polarization :	coaxial
Test Voltage :	DC 5V	Test Mode :	Mode 1

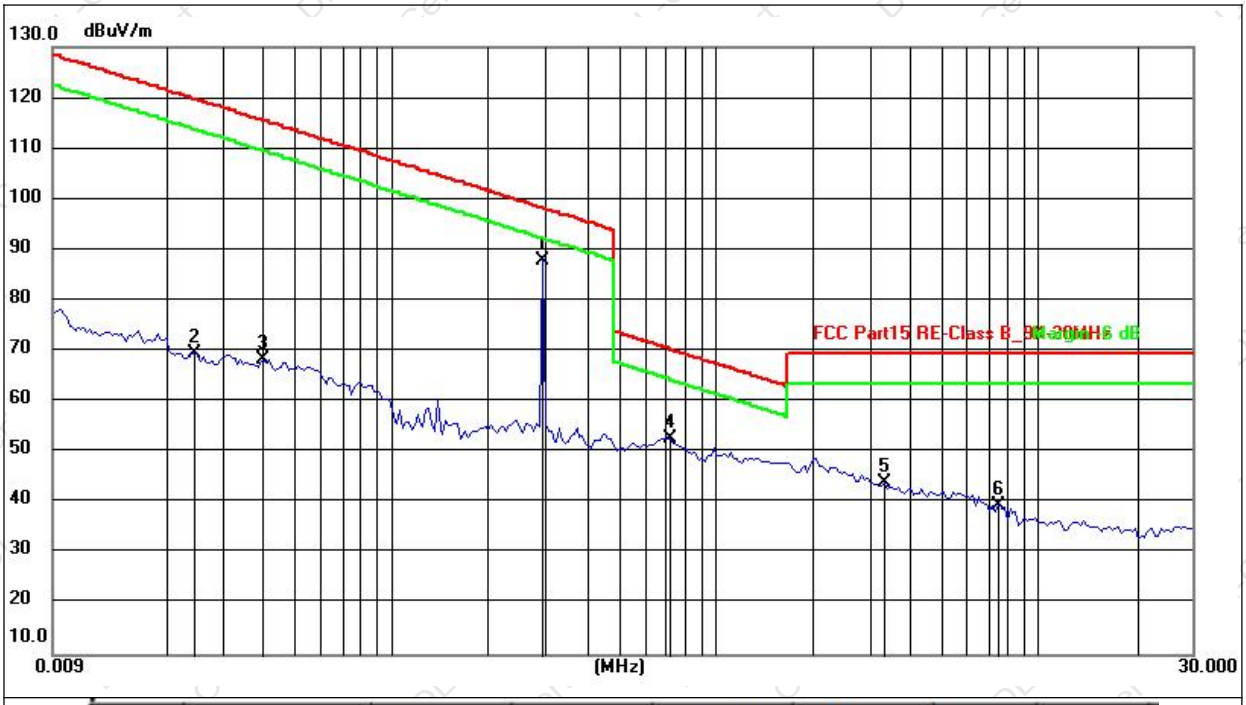

No.	Frequency (MHz)	Reading (dBuV)	Factor (dB/m)	Level (dBuV/m)	Limit (dBuV/m)	Margin (dB)	Detector
1	0.2890	67.60	20.12	87.72	98.39	-10.67	peak
2	0.0246	49.07	20.34	69.41	119.79	-50.38	peak
3	0.0403	48.31	19.98	68.29	115.50	-47.21	peak
4	0.7335	32.45	20.41	52.86	70.30	-17.44	peak
5	3.3567	24.33	19.62	43.95	69.54	-25.59	peak
6	7.5548	20.18	19.23	39.41	69.54	-30.13	peak

Remarks:
1.An initial pre-scan was performed on the peak detector.
2.Quasi-Peak measurement were performed at the frequencies with maximized peak emission.
3.Final Level = Reading level + Correct Factor.
4.Correct Factor = Antenna factor+ Cable loss factor - Amplifier factor.
5.Margin= Measurement Level-Limit.
6.Tests were conducted in both the coaxial and coplanar directions, and only the worst coaxial data is presented.

30MHz-1GHz

Temperature:	26℃	Relative Humidity:	54%
Pressure:	101 kPa	Polarization:	Horizontal
Test Voltage:	DC 5V	Test Mode:	Mode 1

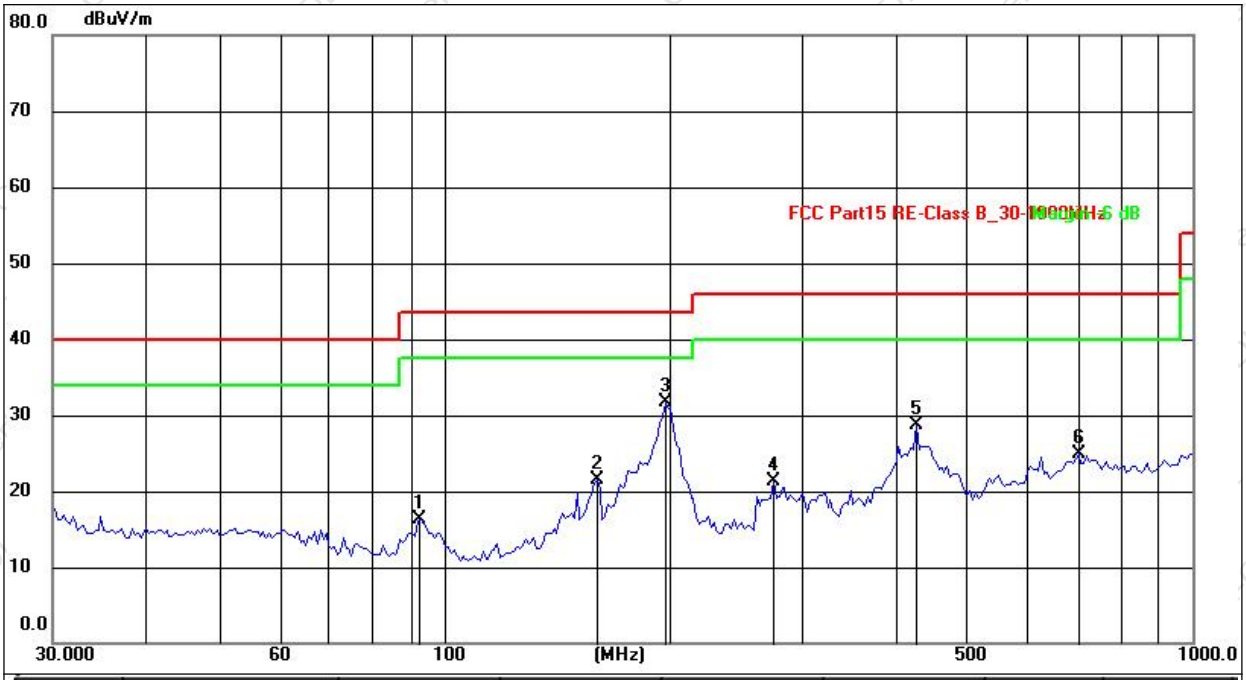

No.	Frequency (MHz)	Reading (dBuV)	Factor (dB/m)	Level (dBuV/m)	Limit (dBuV/m)	Margin (dB)	Detector
1	92.9500	36.19	-19.96	16.23	43.50	-27.27	QP
2	160.0646	37.43	-15.97	21.46	43.50	-22.04	QP
3	197.5457	50.15	-18.39	31.76	43.50	-11.74	QP
4	275.6397	35.45	-14.21	21.24	46.00	-24.76	QP
5	427.2694	43.48	-14.69	28.79	46.00	-17.21	QP
6	704.2259	31.28	-6.44	24.84	46.00	-21.16	QP

Remarks:
1.An initial pre-scan was performed on the peak detector.
2.Quasi-Peak measurement were performed at the frequencies with maximized peak emission.
3.Final Level = Reading level + Correct Factor.
4.Correct Factor = Antenna factor+ Cable loss factor - Amplifier factor.
5.Margin= Measurement Level-Limit.
6.All test modes were tested, with only the worst Mode 1 recorded.

Temperature:	26℃	Relative Humidity:	54%
Pressure:	101kPa	Polarization:	Vertical
Test Voltage:	DC 5V	Test Mode:	Mode 1

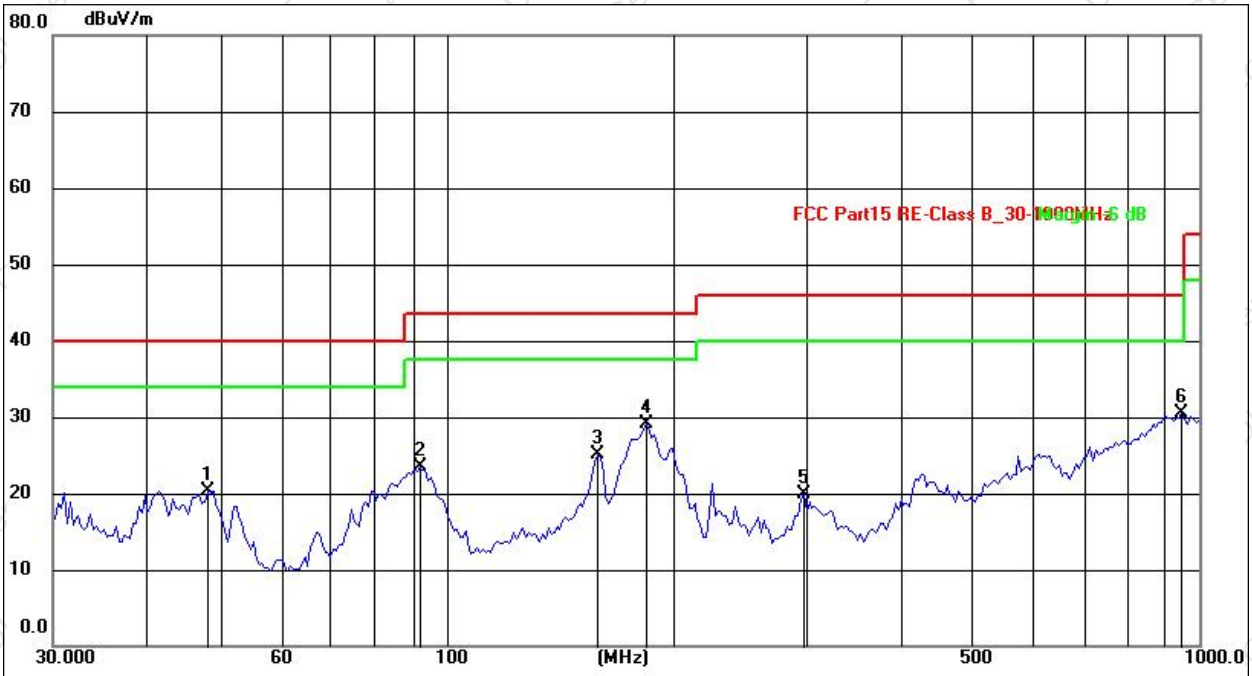

No.	Frequency (MHz)	Reading (dBuV)	Factor (dB/m)	Level (dBuV/m)	Limit (dBuV/m)	Margin (dB)	Detector
1	48.1625	37.46	-17.11	20.35	40.00	-19.65	QP
2	92.1386	44.87	-21.32	23.55	43.50	-19.95	QP
3	158.6673	45.12	-20.01	25.11	43.50	-18.39	QP
4	184.1665	48.88	-19.75	29.13	43.50	-14.37	QP
5	298.2681	37.86	-17.96	19.90	46.00	-26.10	QP
6	948.7608	30.72	-0.18	30.54	46.00	-15.46	QP

Remarks:
1.An initial pre-scan was performed on the peak detector.
2.Quasi-Peak measurement were performed at the frequencies with maximized peak emission.
3.Final Level = Reading level + Correct Factor.
4.Correct Factor = Antenna factor+ Cable loss factor - Amplifier factor.
5.Margin= Measurement Level-Limit.
6.All test modes were tested, with only the worst Mode 1 recorded.

6. 20DB BANDWIDTH TEST

6.1 TEST PROCEDURE

1. Se span = 1.5 ~ 5 times OBW.
2. Set RBW = 1%~5% OBW.
3. Set the video bandwidth (VBW) ≥ 3 x RBW.
4. Detector = peak.
5. Trace mode = max hold.
6. Sweep = auto couple.
7. Allow the trace to stabilize.
8. Measure the maximum width of the emission that is constrained by the frequencies associated with the two outermost amplitude points (upper and lower frequencies) that are attenuated by 20 dB relative to the maximum level measured in the fundamental emission.

6.2 LIMIT

N/A

6.3 TEST SETUP

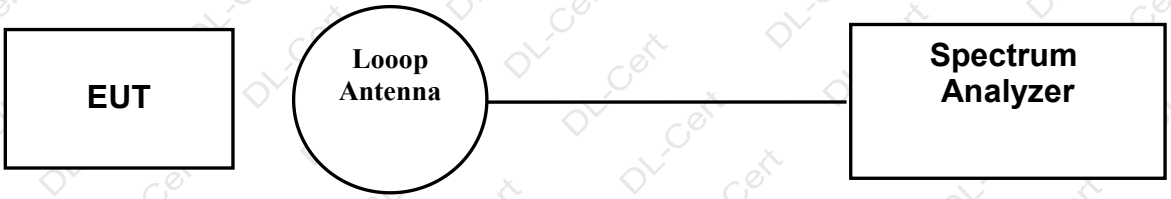

6.4 DEVIATION FROM STANDARD

No deviation.

6.5 TEST RESULT

Temperature:	26 ℃	Relative Humidity:	54%
Pressure:	101kPa	Test Voltage:	DC 5V

Test Coil	Frequency (kHz)	20dB Bandwidth (kHz)	Result
ANT 1	289.00	2.712	Pass

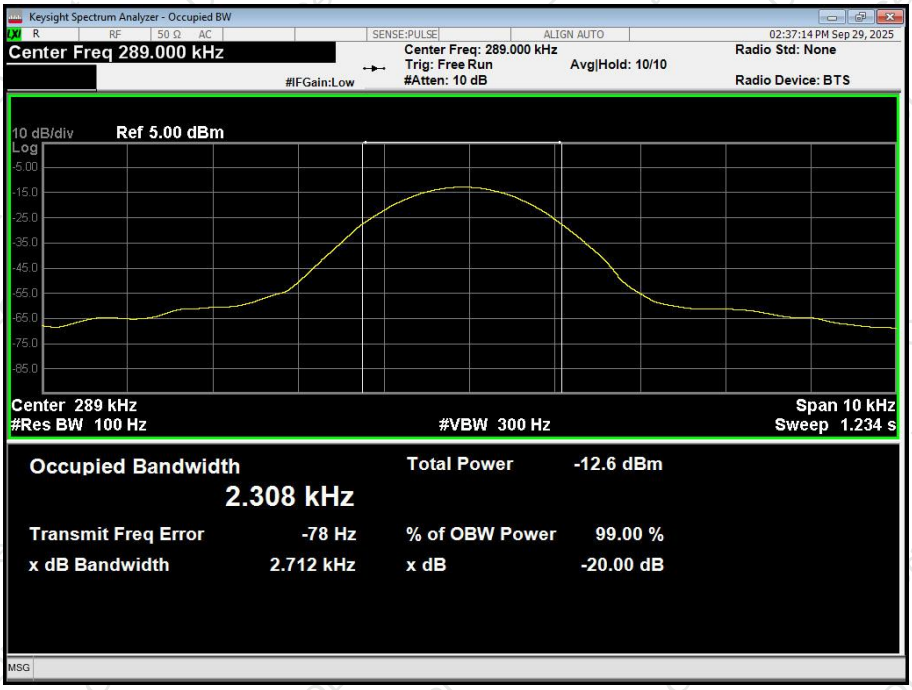

7. ANTENNA REQUIREMENT

Standard requirement:	FCC Part15 C Section 15.203
15.203 requirement: An intentional radiator shall be designed to ensure that no antenna other than that furnished by the responsible party shall be used with the device. The use of a permanently attached antenna or of an antenna that uses a unique coupling to the intentional radiator, the manufacturer may design the unit so that a broken antenna can be replaced by the user, but the use of a standard antenna jack or electrical connector is prohibited.	
EUT Antenna:	
The antenna is Loop Coil antenna, the best case gain of the antennas is 0dBi, reference to the appendix II for details	

8. TEST SETUP PHOTO

Reference to the appendix I for details.

9. EUT CONSTRUCTIONAL DETAILS

Reference to the appendix II for details.

※※※※※ END OF REPORT ※※※※※