2.4G BLUETOOTH, WIFI

ZIGBEE CHIP ANTENNA

2450±50MHz

Dimensions : 5.0 x 2.0 x 1.0 mm

Clearance Area: 7.0 x 5.0 mm

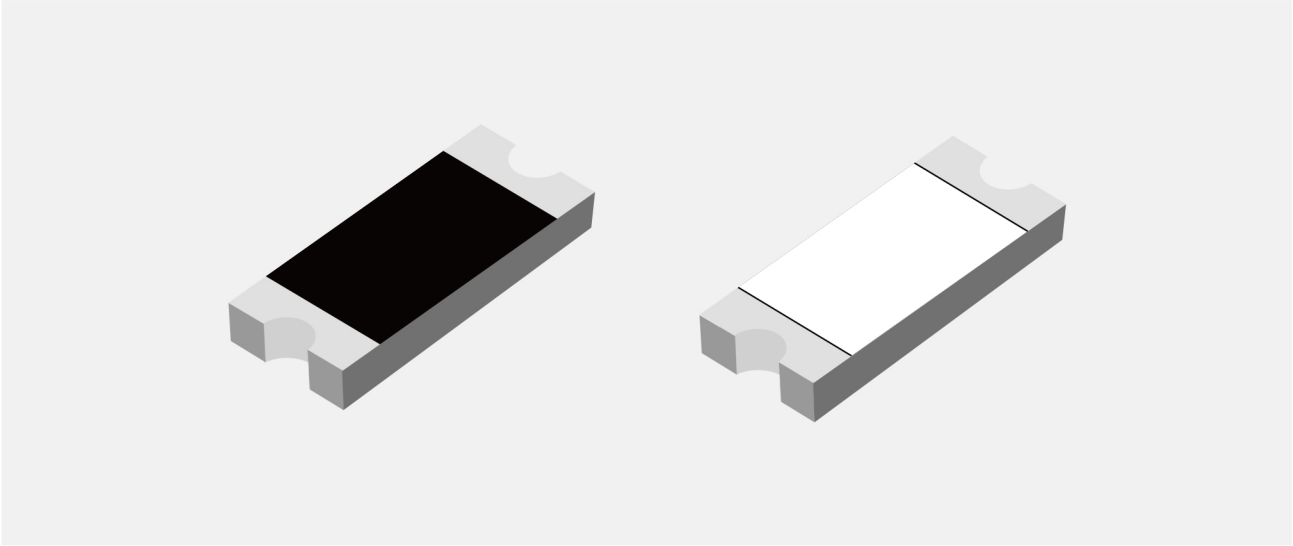

RoHS COMPLIANT

Reach COMPLIANT

PN:ADWH002

Table of Contents

1 FEATURES & BENEFITS 1

2 APPLICATIONS 1

3 ORDER INFORMATION 1

4 REFERENCE GUIDE 2

5 EVALUATION BOARD WITH THE ANTENNA 2

6 MATCHING NETWORK 3

7 RECOMMENDED LAYOUT 3

8 ELECTRICAL PERFORMANCE 4

8.1 VSWR and Return Loss (dB) 4

8.2 Gain (dBi) and Total Efficiency (%) 5

8.3 Radiation Patterns (2.4-2.5 GHz) 6

9 SOLDERING CONDITIONS 7

10 PACKAGING 7

10.1 Optimal Storage Conditions for Packaged Reels 7

10.2 Packagings and Dimensions (Unit: mm) 8

11 ANTENNA CERTIFICATION 9

© 2023 MyAntenna RF Technology Co., Ltd

1 FEATURES & BENEFITS

- Low Profile
- Light Weight
- Easy to Integrate
- Intended for SMD Mounting
- Reduced Cost and Time-to-Market

2 APPLICATIONS

- 3G (UMTS) and 4G (LTE) Mobile Communication Networks
- Wireless Routers and Modems
- Internet of Things (IoT) Devices, M2M
- Remote Technology / Monitoring
- Consumer Tracking
- Smart Metering

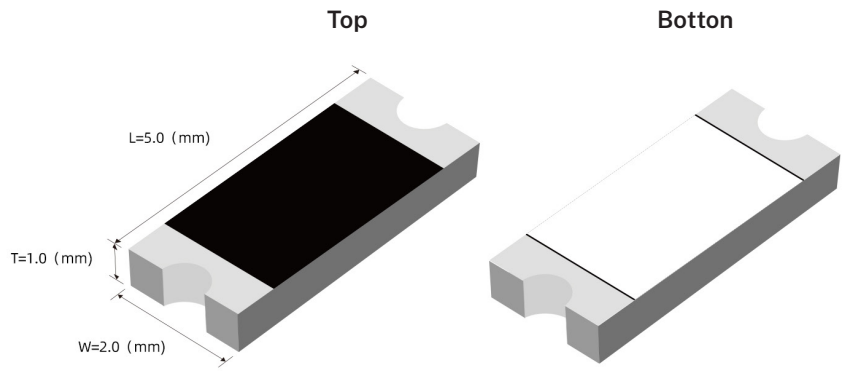

Items	Dimensions (mm)
Length	5.0±0.1
Width	2.0±0.1
Thickness	1.0±0.1

3 ORDER INFORMATION

Product Name	2.4G Bluetooth, WIFI, ZigBee Chip Antenna
Part Number	ADWH002
Dimensions	5.0 x 2.0 x 1.0 mm
Mounting	SMT
Packaging	Tape & Reel
MOQ	2500 pcs/reel

© 2023 MyAntenna RF Technology Co., Ltd

www.smdantenna.com
tel: +86-0755-86503881 email: tech@smdantenna.com
410, Building A, Fenghuang Zhigu, 50 Tiezi Road, Xixiang St,
Baoan District, Shenzhen, Guangdong, China

4 REFERENCE GUIDE

Technical Features	2450±50 MHz
Band Width	>100 MHz
Input Impedance	50 Ω
Peak Gain	0.67 dBi
VSWR	<2
Operating Temperature	-40°C to +80°C
Power Capacity	3 W
Dimensions (L x W x H)	5.0 x 2.0 x 1.0 mm
All data were measured in free space and on a reference ground plane of 65 mm length, 40 mm width, and 1.0 mm thickness. Application data might vary.	

5 EVALUATION BOARD WITH THE ANTENNA

The evaluation board provides operation at 2450±50 MHz.
Evaluation Board dimension: 65 x 40 x 1.0 mm

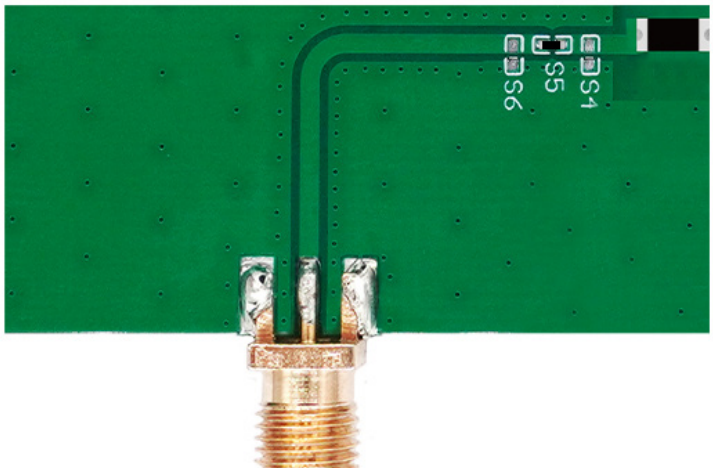

It's strongly recommended to place the antenna near the edge of the board. Maximum antenna performance is achieved by placing the antenna towards one of the corners of the PCB and with the feed point of the antenna as close to same corner of the PCB as possible.

www.smdantenna.com
tel: +86-0755-86503881 email: tech@smdantenna.com
410, Building A, Fenghuang Zhigu, 50 Tiezi Road, Xixiang St,
Baoan District, Shenzhen, Guangdong, China

6 MATCHING NETWORK

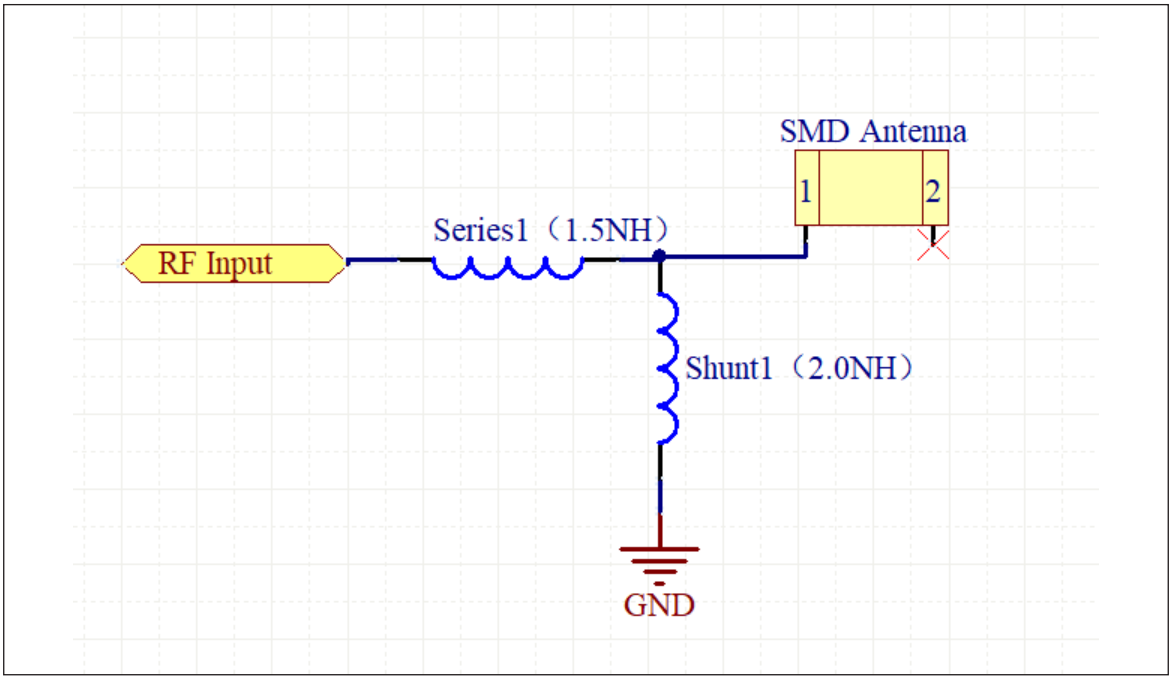

7 RECOMMENDED LAYOUT

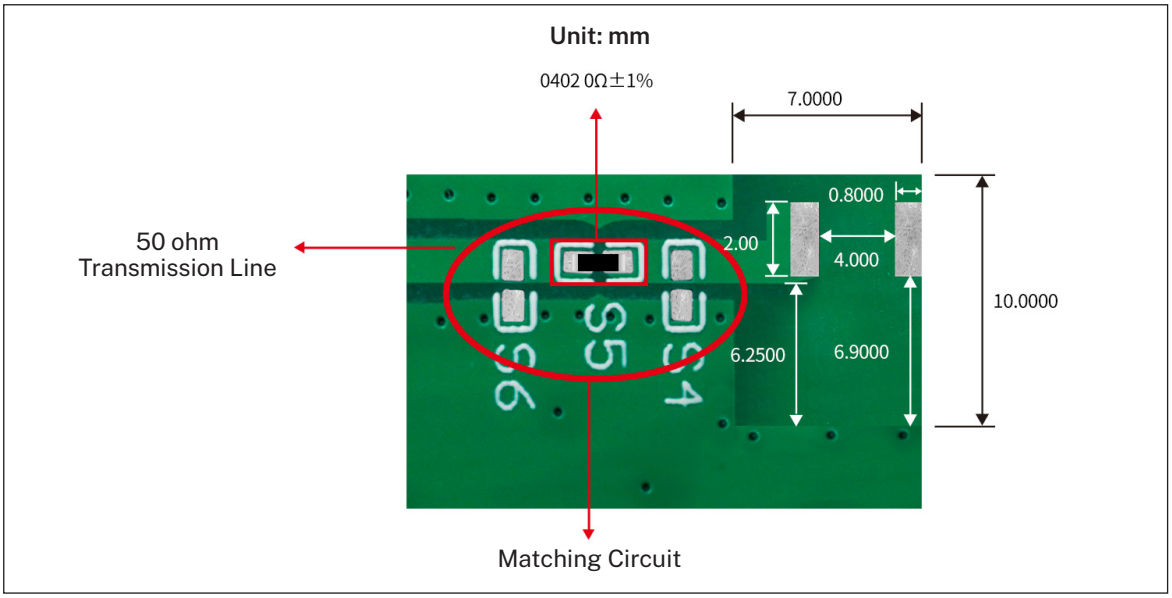

www.smdantenna.com
tel: +86-0755-86503881 email: tech@smdantenna.com
410, Building A, Fenghuang Zhigu, 50 Tiezi Road, Xixiang St,
Baoan District, Shenzhen, Guangdong, China

8 ELECTRICAL PERFORMANCE

◎ **Note**

The data displayed in Chapter 8 were measured in free space and on a reference ground plane of 65 mm length, 40 mm width, and 1.0 mm thickness.

8.1 VSWR and Return Loss (dB)

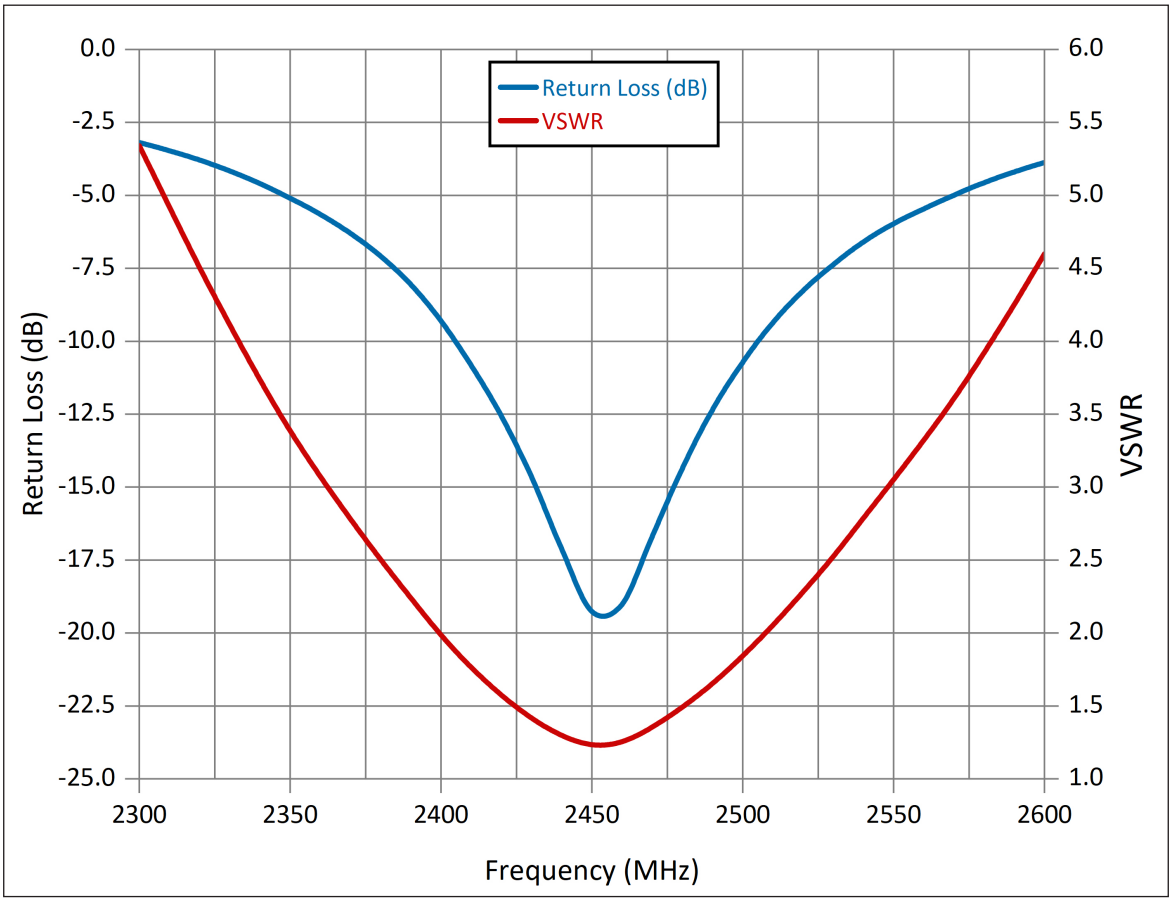

www.smdantenna.com
tel: +86-0755-86503881 email: tech@smdantenna.com
410, Building A, Fenghuang Zhigu, 50 Tiezi Road, Xixiang St,
Baoan District, Shenzhen, Guangdong, China

8.2 Gain (dBi) and Total Efficiency (%)

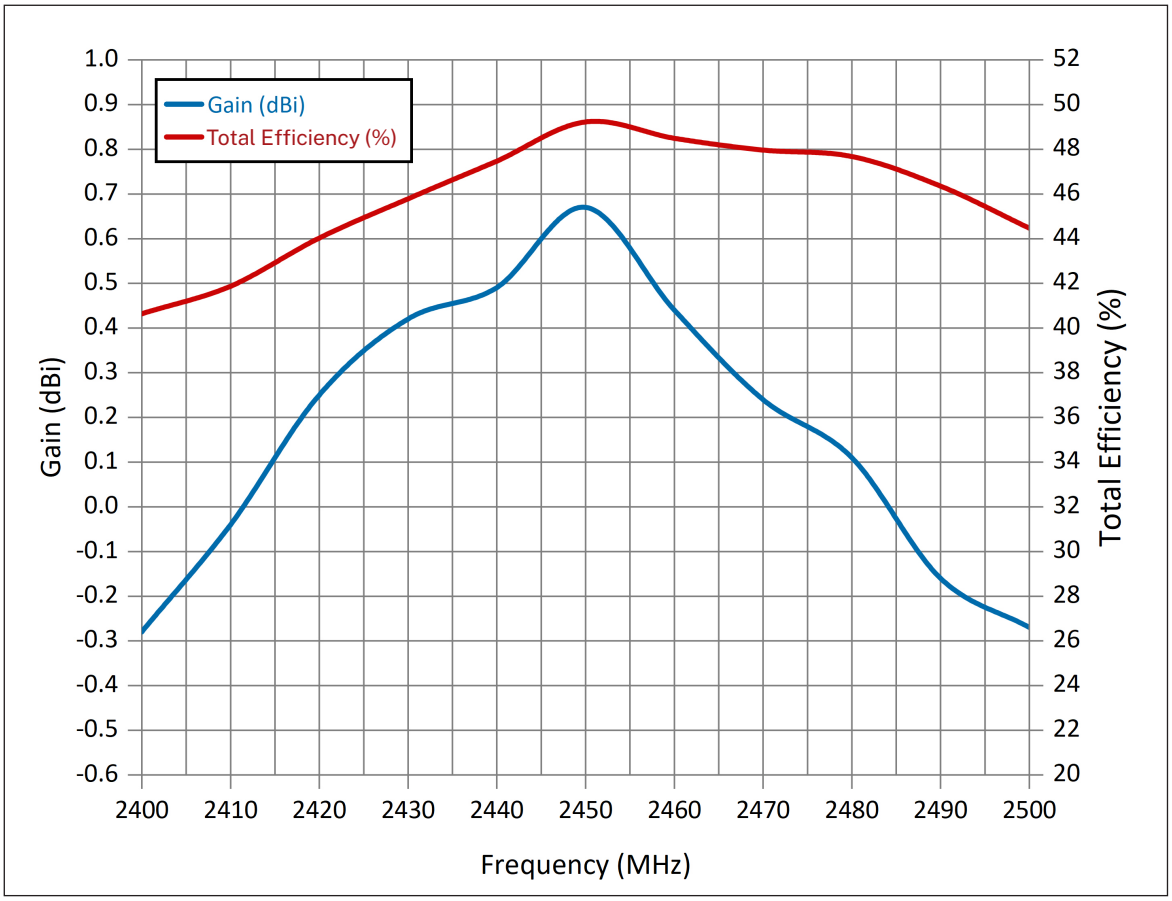

Frequency (MHz)	Gain (dBi)	Efficiency (%)
2400	-0.28	40.64
2410	-0.04	41.87
2420	0.25	44.02
2430	0.42	45.78
2440	0.49	47.46
2450	0.67	49.22
2460	0.44	48.49
2470	0.24	47.96
2480	0.11	47.67
2490	-0.16	46.35
2500	-0.27	44.47

www.smdantenna.com
tel: +86-0755-86503881 email: tech@smdantenna.com
410, Building A, Fenghuang Zhigu, 50 Tiezi Road, Xixiang St,
Baoan District, Shenzhen, Guangdong, China

8.3 Radiation Patterns (2.4-2.5 GHz)

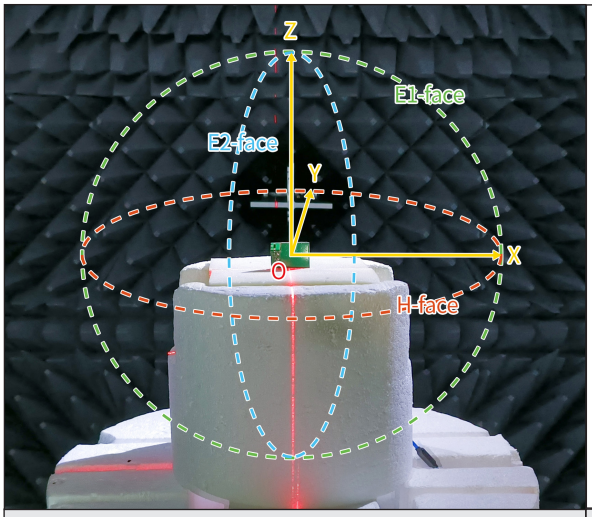

PCB board size: 65 mm x 40 mm x 1.0 mm

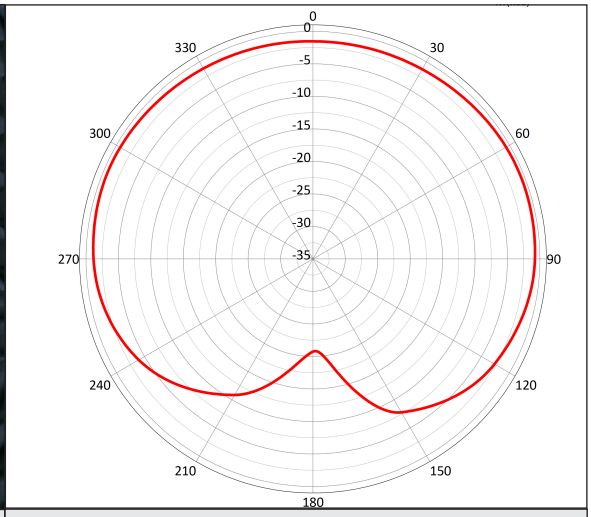

θ = 90° Plane XY at 2450 MHz, Gain 0.67 dBi

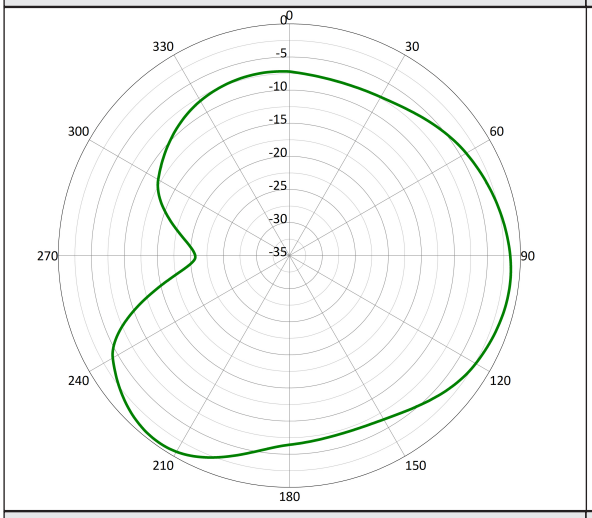

Φ = 0° Plane XZ at 2450 MHz, Gain 0.67 dBi

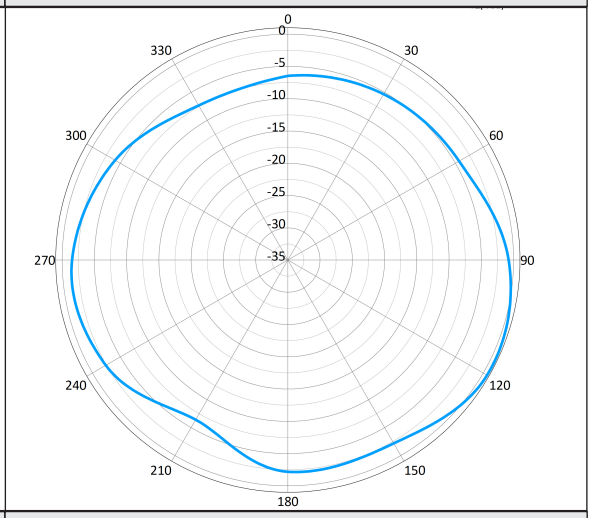

Φ = 0° Plane YZ at 2450 MHz, Gain 0.67 dBi

© 2023 MyAntenna RF Technology Co., Ltd

www.smdantenna.com
tel: +86-0755-86503881 email: tech@smdantenna.com
410, Building A, Fenghuang Zhigu, 50 Tiezi Road, Xixiang St,
Baoan District, Shenzhen, Guangdong, China

9 SOLDERING CONDITIONS

This antenna is suitable for lead free soldering.
The reflow duration should be adjusted to create good solder joints without raising the antenna temperature beyond the allowed maximum of 260°C.
The figure below shows the temperature profile for soldering.

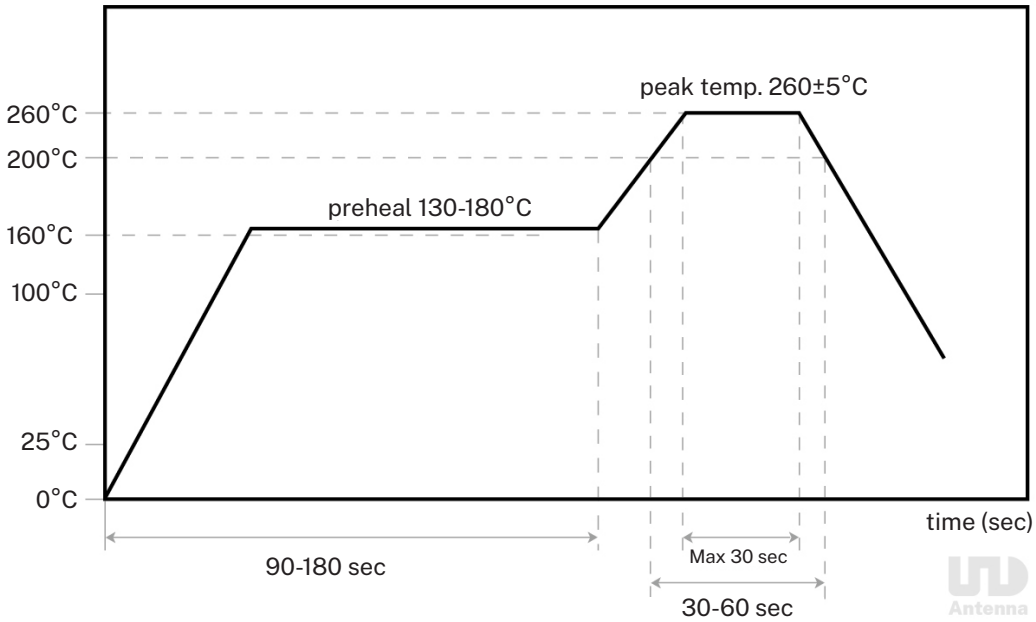

10 PACKAGING

10.1 Optimal Storage Conditions for Packaged Reels

Temperature	-5°C to 40°C
Humidity	Less than 70% RH
Shelf life	18 months
Storage place	Away from corrosive gas and direct sunlight
Packaging	Reels should be stored in unopened sealed manufacturer's plastic packaging.

◎ **Note**
Storage of open reels of antennas is not recommended due to possible oxidation of pads on antennas. If short-term storage is necessary, then it is highly recommended that the bag containing the antenna reel is re-sealed and stored in like storage conditions as in the above table.

www.smdantenna.com
tel: +86-0755-86503881 email: tech@smdantenna.com
410, Building A, Fenghuang Zhigu, 50 Tiezi Road, Xixiang St,
Baoan District, Shenzhen, Guangdong, China

10.2 Packagings and Dimensions (Unit: mm)

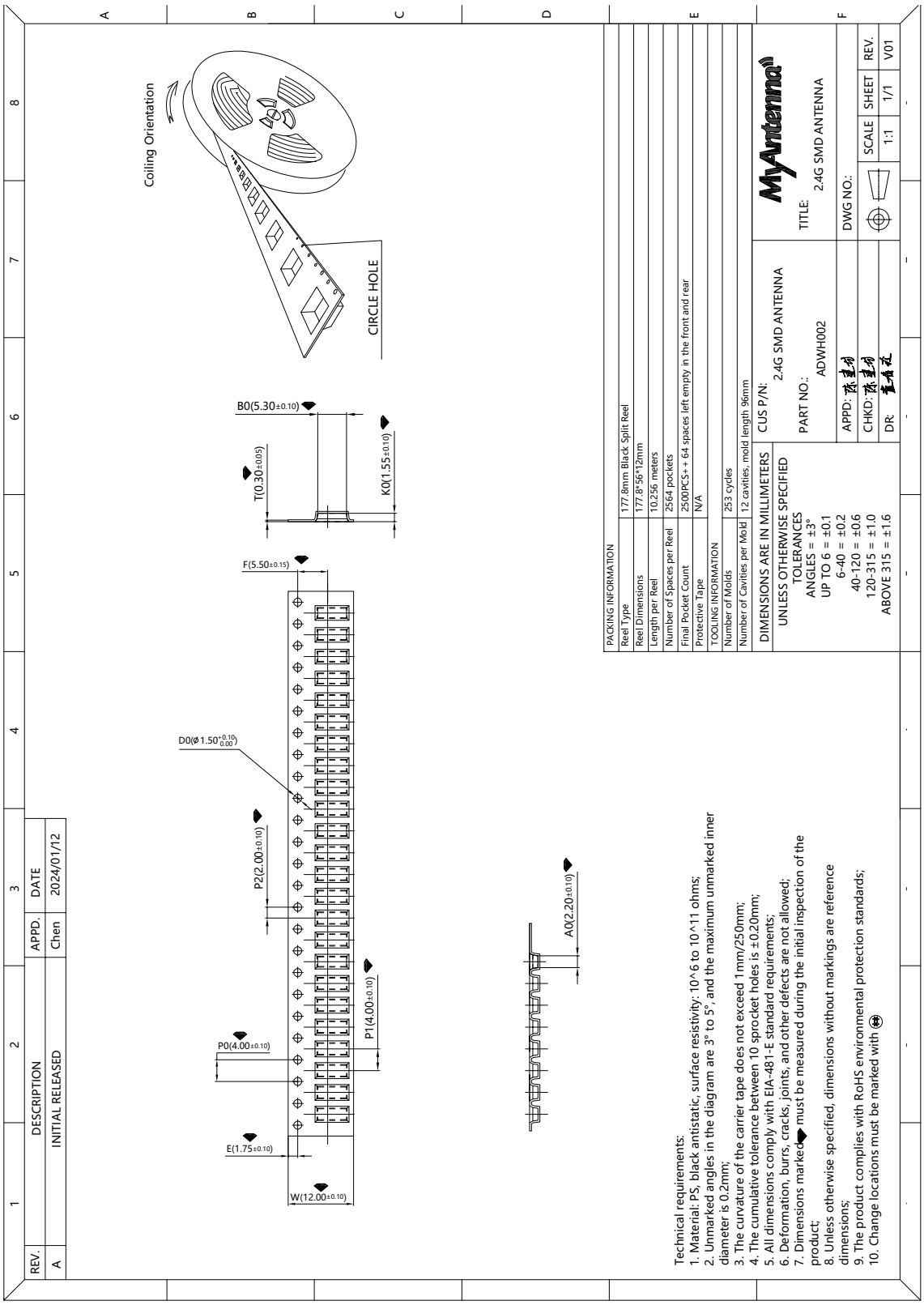

© 2023 MyAntenna RF Technology Co., Ltd

www.smdantenna.com
tel: +86-0755-86503881 email: tech@smdantenna.com
410, Building A, Fenghuang Zhigu, 50 Tiezi Road, Xixiang St,
Baoan District, Shenzhen, Guangdong, China

11 ANTENNA CERTIFICATION

RoHS Approval	Compliant [2011/65/EU&2015/863]
REACH Approval	Conform or declared [(EC)1907/2006]
Hazardous material regulation conformance: A certificate of conformance is available upon request. Feel free to consult us for details.	

www.smdantenna.com

The materials provided herein, which are intended for illustration purposes only, are believed to be reliable and correct. However, no responsibility is further assumed for inaccuracies or incompleteness, and all such information shall be entirely at the user's risk. All information is subject to change without prior notice.
Copyright © 2023 ShenZhen MyAntenna RF Technology Co., Ltd. All Rights Reserved.

www.smdantenna.com
tel: +86-0755-86503881 email: tech@smdantenna.com
410, Building A, Fenghuang Zhigu, 50 Tiezi Road, Xixiang St,
Baoan District, Shenzhen, Guangdong, China