2.4GHz 5221 SMD Antenna: RANT5221F245M02

1. Applications

WLAN, 802.11b/g, Bluetooth, WLAN, etc…

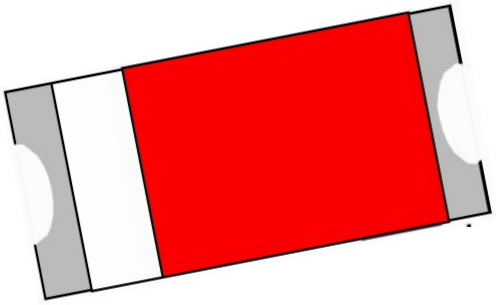

2. Features

SMD, high reliability, ultra Impact, Omni-directional…

3. Part Number Information

RANT	5221	F	245	M	02
(A)	(B)	(C)	(D)	(E)	(F)

(A)Product Type	SMD Antenna
(B) Size Code	5.0x2.0mm(±0.2mm)
(C) Material	High K material
(D) Frequency	2.4 ~ 2.5GHz
(E) Feeding mode	PIFA & Single Feeding
(F) Antenna type	SMD Antenna

咏成国际

咏成國際科技有限公司
RAIN International Technology Co., Ltd.
Building F, 709, Yuxing Technology Industrial Park, Nanchang Third Industrial Zone, Xiangxiang Sub-district, Bao'an District, Shenzhen City

4. 产品尺寸 product size

5020单极天线 5020 Monopole Antenna

Figure	Symbol	Dimension (mm)
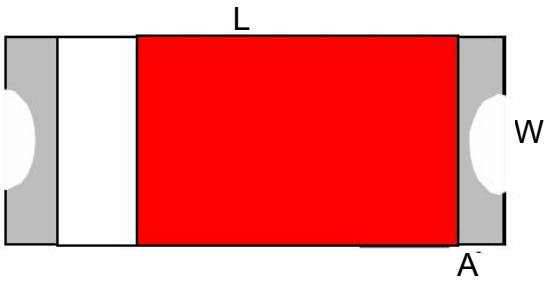	L （Long）	5.00 ± 0.20
	W （Wide）	2.00 ± 0.30
	T（Thickness）	1.0 ± 0.30
	A （Electrode width）	0.50± 0.20

5. Electrical Specification

Specification		
Part Number	RANT 5221 F245 M02	
Central Frequency	2450	MHz
Bandwidth	120 (Min.)	MHz
Return Loss	-10 (Max)	dB
Peak Gain	3.59	dBi
Impedance	50	Ohm
Operating Temperature	-40～+85	℃
Maximum Power	4	W
Resistance to Soldering Heats	10 (@ 260℃)	sec.
Polarization	Linear	
Azimuth Beamwidth	Omni-directional	
Termination	Sn (Leadless)	

6. 推荐PCB Recommended PCB

FootPrint (Unit : mm)

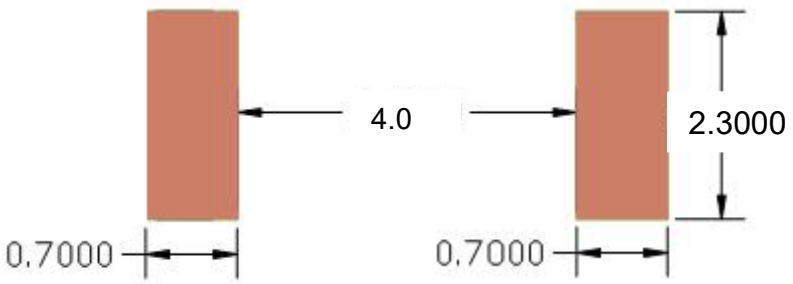

7. Measurement Results

Return Loss

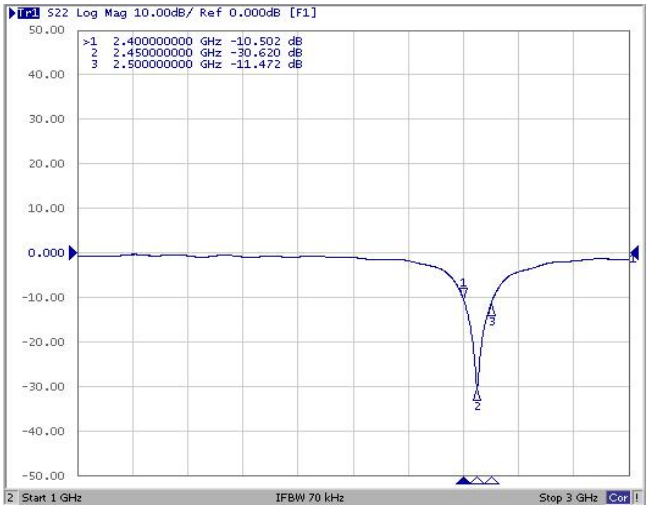

7.2 Radiation Pattern

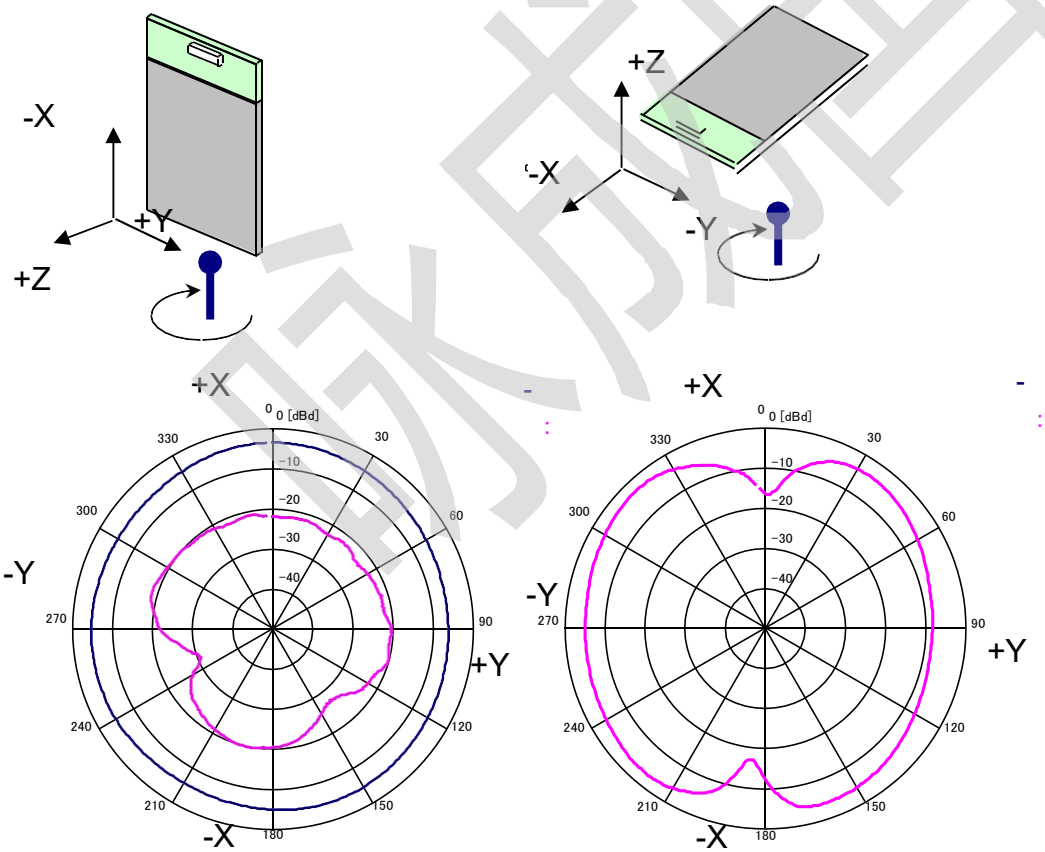

Note: All low, medium and high channels have been tested. This specification document only presents the test results for the worst channel.

8. Reliability and Test Condictions

Test item	Test condition / Test method	Specification
Solderability JIS C 0050-4.6 JESD22-B102D	*Solder bath temperature：235 ± 5°C *Immersion time：2 ± 0.5 sec Solder：Sn3Ag0.5Cu for lead-free	At least 95% of a surface of each terminal electrode must be covered by fresh solder.
Leaching (Resistance to dissolution of metallization) IEC 60068-2-58	*Solder bath temperature：260 ± 5°C *Leaching immersion time：30 ± 0.5 sec Solder : SN63A	Loss of metallization on the edges of each electrode shall not exceed 25%.
Bending test JIS C 0051- 7.4.1	The middle part of substrate shall be pressurized by means of the pressurizing rod at a rate of about 1 mm/s per second until the deflection becomes 1mm/s and then pressure shall be maintained for 5±1 sec. Measurement to be made after keeping at room temperature for 24±2 hours	No mechanical damage. Electrical specification shall satisfy the descriptions in electrical characteristics under the operational temperature range within -40 ~ 85°C.
Resistance to soldering heat JIS C 0050-5.4	*Preheating temperature：120~150℃, 1 minute. *Solder temperature：270±5°C *Immersion time：10±1 sec Solder：Sn3Ag0.5Cu for lead-free Measurement to be made after keeping at room temperature for 24±2 hrs	No mechanical damage. Electrical specification shall satisfy the descriptions in electrical characteristics under the operational temperature range within -40 ~ 85°C. Loss of metallization on the edges of each electrode shall not exceed 25%.
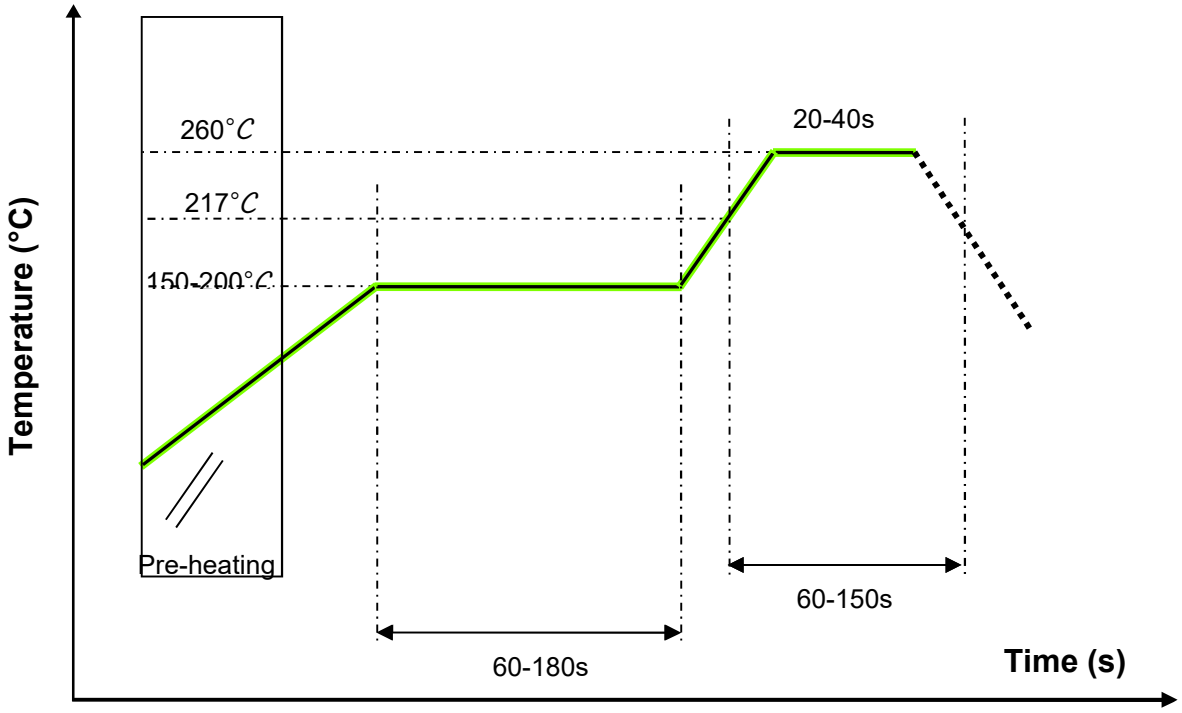
9. Soldering and Mounting