Model 370

LevelRay

Radar Level Sensor

Installation and Operation Guide

TELEDYNE | ISCO

Manual Body #69-4873-001
© 2025. All rights reserved, Teledyne Instruments, Inc.
Revision XB, April 29, 2026

Use and Disclosure of Data Information contained herein is classified as EAR99 under the U.S. Export Administration Regulations. Export, reexport or diversion contrary to U.S. law is prohibited.

Foreword - Water and Wastewater Products

This instruction manual is designed to help you gain a thorough understanding of the operation of the equipment. Teledyne ISCO recommends that you read this manual completely before placing the equipment in service.

Although Teledyne ISCO designs reliability into all equipment, there is always the possibility of a malfunction. This manual may help in diagnosing and repairing the malfunction.

If a problem persists, call or e-mail Teledyne ISCO technical support for assistance. Simple difficulties can often be diagnosed over the phone. For faster service, please have your serial number ready.

If it is necessary to return the equipment to the factory for service, please follow the shipping instructions provided by technical support, including the use of the Return Merchandise Authorization (RMA) specified. Be sure to include a note describing the malfunction. This will aid in the prompt repair and return of the equipment. **No item may be returned for service without a Return Merchandise Authorization (RMA) number issued by Teledyne.**

Teledyne ISCO welcomes suggestions that would improve the information presented in this manual or enhance the operation of the equipment itself.

Teledyne ISCO is continually improving its products and reserves the right to change product specifications, replacement parts, schematics, and instructions without notice.

Contact Information

Customer Service

Phone:	(800) 228-4373	(USA, Canada, Mexico)
	(402) 464-0231	(Outside North America)
Fax:	(402) 465-3022	
Email:	isco.orders@teledyne.com	

Technical Support

Phone:	Toll Free (866) 298-6174 (Samplers and flowmeters)
Email:	iscowatersupport@Teledyne.com
Return equipment to:	4700 Superior Street, Lincoln, NE 68504-1398

Other Correspondence

Mail to:	P.O. Box 82531, Lincoln, NE 68501-2531

Warranty and Operation Manuals can be found on our website:

www.teledyneisco.com

General Warnings

Before installing, operating, or maintaining this equipment, it is imperative that all hazards and preventive measures are fully understood. While specific hazards may vary according to location and application, heed the following general warnings:

⚠ WARNING

Avoid hazardous practices! If you use this instrument in any way not specified in this manual, the protection provided by the instrument may be impaired.

⚠ AVERTISSEMENT

Éviter les usages périlleux! Si vous utilisez cet instrument d'une manière autre que celles qui sont specifiées dans ce manuel, la protection fournie de l'instrument peut être affaiblie; cela augmentera votre risque de blessure.

Hazard Severity Levels

This manual applies *Hazard Severity Levels* to the safety alerts, These three levels are described in the sample alerts below.

⚠ CAUTION

Cautions identify a potential hazard which, if not avoided, may result in minor or moderate injury. This category can also warn you of unsafe practices, or conditions that may cause property damage.

⚠ WARNING

Warnings identify a potentially hazardous condition which, if not avoided, could result in death or serious injury.

⚠ DANGER

DANGER – limited to the most extreme situations to identify an imminent hazard which, if not avoided, will result in death or serious injury.

Hazard Symbols

The equipment and this manual use symbols used to warn of hazards. The symbols are explained below.

Hazard Symbols	
Warnings and Cautions	
	The exclamation point within the triangle is a warning sign alerting you of important instructions in the instrument's technical reference manual.
	The lightning flash and arrowhead within the triangle is a warning sign alerting you of "dangerous voltage" inside the product.
Symboles de sécurité	
	Ce symbole signale l'existence d'instructions importantes relatives au produit dans ce manuel.
	Ce symbole signale la présence d'un danger d'électrocution.
Warnungen und Vorsichtshinweise	
	Das Ausrufezeichen in Dreieck ist ein Warnzeichen, das Sie darauf aufmerksam macht, daß wichtige Anleitungen zu diesem Handbuch gehören.
	Der gepfeilte Blitz im Dreieck ist ein Warnzeichen, das Sei vor "gefährlichen Spannungen" im Inneren des Produkts warnt.
Advertencias y Precauciones	
	Esta señal le advierte sobre la importancia de las instrucciones del manual que acompañan a este producto.
	Esta señal alerta sobre la presencia de alto voltaje en el interior del producto.

General safety instruction

The sensor and its accessories are **not** approved for hazardous locations.

The device complies with all prevailing regulations and the FCC Code of Federal Regulations, CFR 47, Part 15. The operator is responsible to ensure the device is operated in flawless and reliable condition. To avoid any danger to the device or immediate surroundings, the safety approval markings and safety tips must be observed. The transmitting power of the radar sensor is below the internationally approved limits and therefore no health impairments are to be expected with intended use. The frequency range can be found in the technical specifications of this manual.

Regulatory Approval

FCC

This device complies with part 15 of the FCC Rules. Operation is subject to the following two conditions: (1) This device may not cause harmful interference, and (2) this device must accept any interference received, including interference that may cause undesired operation.

NOTE: This equipment has been tested and found to comply with the limits for a Class A digital device, pursuant to part 15 of the FCC Rules. These limits are designed to provide reasonable protection against harmful interference when the equipment is operated in a commercial environment. This equipment generates, uses, and can radiate radio frequency energy and, if not installed and used in accordance with the instruction manual, may cause harmful interference to radio communications. Operation of this equipment in a residential area is likely to cause harmful interference, in which case the user will be required to correct the interference at their own expense.

NOTICE

Do not perform changes or modifications to this equipment that are not authorized by Teledyne Instruments, Inc., as this could void your authority to operate it.

Canada

Notice: This equipment is not intended for use in residential environments and may not provide adequate protection to radio reception in such environments.

Avis: Cet appareil n'est pas destiné à être utilisé dans des environnements résidentiels et peut ne pas assurer la protection adéquate à la réception radioélectrique dans ce type d'environnements.

CAN ICES-001 (A) / NMB-001 (A)

This Industrial, Scientific and Medical (ISM) apparatus has been tested and found to comply with the limits for a Class A device, pursuant to the Canadian Interference-Causing Equipment Standard 001 (ICES-001). These limits are designed to provide reasonable protection against harmful interference when the equipment is operated in a commercial environment. This equipment generates, uses, and can radiate radio frequency energy and, if not installed and used in accordance with the instruction manual, may cause harmful interference to radio communications. Operation of this equipment in a residential area is likely to cause harmful interference in which case the user will be required to correct the interference at his own expense.

Cet appareil industriel, scientifique et médical (ISM) a été testé et jugé conforme aux limites pour un appareil de classe A, conformément à la norme canadienne sur les équipements causant des interférences 001 (NMB-001). Ces limites sont conçues pour fournir une protection raisonnable contre les interférences nuisibles lorsque l'équipement est utilisé dans un environnement

commercial. Cet équipement génère, utilise et peut émettre de l'énergie radiofréquence et, s'il n'est pas installé et utilisé conformément au manuel d'instructions, peut causer des interférences nuisibles aux communications radio. L'utilisation de cet équipement dans une zone résidentielle est susceptible de causer des interférences nuisibles, auquel cas l'utilisateur sera tenu de corriger les interférences à ses propres frais.

Constraints according to **RSS-210 Annex J**:

The LevelRay is not allowed and shall not be used on Satellites, aircraft, or UAVs.

EU

Notice: This equipment is not intended for use in residential environments and may not provide adequate protection to radio reception in such environments.

This Industrial, Scientific, and Medical (ISM) apparatus is categorized as Group 1, Class A equipment. It has been tested and found to comply with the limits for a Class A device, pursuant to EN 55011 (CISPR 11) limits. These limits are designed to provide reasonable protection against harmful interference when the equipment is operated in a commercial environment. This equipment generates, uses, and can radiate radio frequency energy and, if not installed and used in accordance with the instruction manual, may cause harmful interference to radio communications. Operation of this equipment in a residential area is likely to cause harmful interference in which case the user will be required to correct the interference at his own expense.

WEEE Directive

Teledyne ISCO products comply with the Waste Electrical Electronic Equipment requirements outlined in the EU WEEE Directive 2012/19/EU and the UK WEEE Regulations 2013.

The following symbol appears on all Teledyne ISCO products and indicates the instrument is electronic equipment and should not be disposed of in standard trash receptacles.

Please contact Teledyne ISCO or your local distributor for instructions on disposal of the equipment or returning it to Teledyne ISCO for proper disassembly and disposal. Contact Teledyne ISCO Support or email iscowatersupport@teledyne.com.
Please include the following information:

- Company Name and Address
- Contact Information (Name, Email, and Phone Number)
- Model
- Serial Number

LevelRay and EU RED Cypbersecurity

The LevelRay non-contact level sensor is one element of a flow monitoring system. The cybersecurity of the LevelRay will be affected by the cybersecurity of the entire system. The following describes the features related to cybersecurity as well as the responsibilities of the end-user to maintain it. In general, the best way to maintain the cybersecurity of the system is to physically protect the system from tampering. The LevelRay sensor's enclosure is hermetically sealed and therefore tampering of any LevelRay hardware would require the enclosure to be physically broken and destroyed before tampering could happen. This section will explore the security of several aspects of the LevelRay device, but the user is cautioned to examine the entire system.

Bluetooth®

The LevelRay implements Bluetooth Low Energy (BLE) v5. Communication. When a smart device is paired, communications is encrypted according to Bluetooth Low Energy specifications. Pairing may require user interaction. Any Bluetooth enabled device can connect to the LevelRay and ascertain high level device information such as model and serial number. The communication between the host and the LevelRay is encrypted using 128-bit AES-CCM.

The BLE GATT services available are:

- Bluetooth standard device information service: 180A
- Teledyne Authorization service: 081ba3f6-f64a-4f5b-bfef-416a8a0ebc28
- Teledyne LevelRay service: d43a8bee-d71a-484d-9df2-9f321f9b7632
- Teledyne TIEBus service: b46a5229-507e-4989-b9cb-a882fd18538a
- Nordic DFU SMP service: 8D53DC1D-1DB7-4CD3-868B-8A527460AA84

Measurement and setup information via LevelRay services cannot be acquired without authorization. The LevelRay uses a challenge-response authorization scheme utilizing a 6-digit passcode and a procedure that never transmits the authorization code. Instead, a SHA-256 cryptographic hash of the passcode along with exchanged random numbers using the Arm CryptoCell True random number generator, are calculated on both the host device and the sensor. If those hashes match, then the host is authorized. This authorization scheme mitigates against replay attacks gaining improper authorization.

Every device has a unique passcode that is printed on the label attached to the LevelRay. This passcode cannot be bypassed, but it can be changed by the end-user.

Wireless communication interference

The Bluetooth option in the LevelRay is used to connect to dedicated apps on mobile devices to configure the LevelRay, and to acquire measurement data from the LevelRay to the mobile device. Further handling of the data on the mobile device is up to the user's discretion. The LevelRay operates in an unlicensed ISM band at 2.4 GHz where any third party can intercept the radio waves, willfully or accidentally, for any unknown purpose. In the event this product is used near other wireless devices such as microwave and wireless LAN, which operate on the same frequency band as this product, there is a possibility that interference may occur. If interference occurs, stop the operation of the other devices or relocate the LevelRay away from other wireless devices before attempting to use it

Modbus/TIENet – RS485

The RS485 interface has no inherent protection from a cybersecurity standpoint. The LevelRay uses the Modbus RTU Application Protocol over the RS485 interface. This is an open protocol with no cybersecurity protection. This allows the RS485 to be used with any Modbus compliant computer or controller. As such, it is the responsibility of the end-user to physically secure the RS485 interface from being tampered with or destroyed.

Non-Volatile Storage

The LevelRay has flash memory which contains the operating firmware as well as device configuration settings. This data is protected from being read or written by the microprocessor, but their contents are NOT encrypted. All cryptographic digital

assets are stored in the microprocessor's key management unit (KMU) which are not readable to software and to other hardware components. It is the end-user's responsibility to physically protect the LevelRay from being destroyed and potentially allowing the underlying components to be tampered with.

Firmware updates

The LevelRay firmware can be updated, but only updates supplied by Teledyne ISCO will operate. The firmware update files are not encrypted in any way, but they are cryptographically signed using the Elliptic Curve Digital Signature algorithm, ECDSA-256. This ensures that only signed firmware from Teledyne ISCO can be used with LevelRay. Should someone try to change the firmware update binary or try to load their own binary, that firmware would not run on the LevelRay, and the previously installed firmware will continue to operate.

Firmware updated via Bluetooth is encrypted in transit, but firmware sent via the RS485 interface is not encrypted. However, without a proper signature, modified firmware will not run.

Cipher GO!

The Cipher GO! application is digitally signed by Teledyne Instruments Inc. The application will store and use an encrypted version of the LevelRay passcode, so the end-user is cautioned to protect access to the device running Cipher GO! with a user password or biometric security.

Model 370 LevelRay Radar Level Sensor

Table of Contents

Section 1 Introduction

1.1 Description 1-1
1.2 Model 370 LevelRay Sensor Design 1-2
1.3 Operation 1-2
1.4 Maintenance 1-2
1.5 Technical Specifications 1-4
1.6 Accessories 1-5
1.6.1 Ordering Information 1-5
1.6.2 TIENet Model 370 LevelRay sensor 1-6

Section 2 Installation and Setup for the DuraTracker

2.1 Sensor Installation Considerations 2-1
2.1.1 Beam Angle 2-1
2.1.2 Humidity 2-1
2.1.3 Surface 2-1
2.1.4 Temperature 2-1
2.1.5 Waves 2-1
2.2 Connecting the Cable 2-2
2.2.1 Connecting to DuraTracker via a TIENet Receptacle 2-2
2.3 Sensor Installation 2-2
2.3.1 Dead Band 2-3
2.3.2 Sensor Measuring Range 2-3
2.3.3 Submersion and Fouling 2-3
2.3.4 Leveling 2-5
2.3.5 Mounting Options 2-5
2.4 Installation 2-7
2.4.1 Electrical Requirements 2-7
2.4.2 Ambient Environment 2-7
2.4.3 Radio Frequency Radiation 2-7
2.5 Configuring the System with an ISCO Logger 2-8
2.5.1 DuraTracker Setup 2-8
2.6 Level Calibration 2-15
2.7 Firmware Updates 2-16
2.8 Troubleshooting the Model 370 LevelRay 2-16
2.9 Contact Teledyne ISCO 2-17

Appendix A Replacement Parts

A.1 Replacement Parts A-1
A.1.1 TIENet 370 LevelRay Radar Level Sensor Replacement Parts A-2

List of Figures

1-1 DuraTracker monitoring system with a LevelRay sensor (mounting hardware not shown) 1-1
1-2 Model 370 LevelRay radar sensor with TIENet plug 1-2

1-3 The radome. 1-3
2-1 Antenna beam angle 2-3
2-2 LevelRay X- and Y-axis readings. 2-5

Model 370 LevelRay Radar Level Sensor

Section 1 Introduction

The Model 370 LevelRay non-contact radar level sensor, a TIENet device, can provide liquid level measurement to the DuraTracker® flow meter. The flow meter has built-in level-to-flow conversions that cover most open channel flow measurement situations.

1.1 Description

Teledyne ISCO's LevelRay non contact radar level sensor uses the FMCW (Frequency Modulated Continuous Wave) method to measure liquid level. Mounted above the flow, the sensor sends a linearly frequency swept radar signal and receives the reflection from the liquid surface. The slight time delay between transmitted and reflected signals creates a beat frequency proportional to distance, allowing the device to calculate level accurately. This non contact method minimizes maintenance and performs reliably in applications with chemicals, grease, silt, or suspended solids.

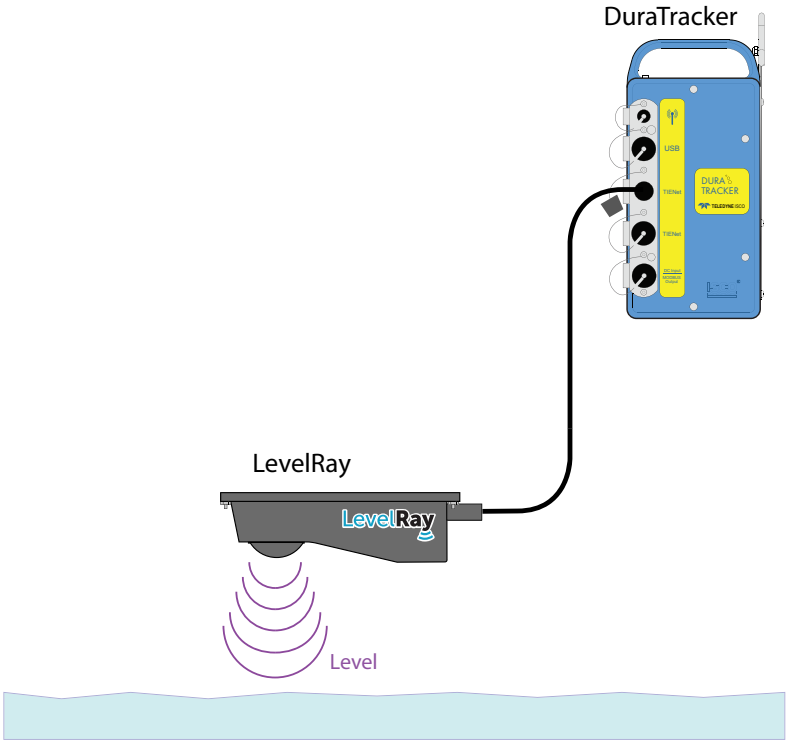

Figure 1-1 DuraTracker monitoring system with a LevelRay sensor (mounting hardware not shown)

This non-contact measurement method reduces the frequency of maintenance and is ideal for applications where the flow may contain chemicals, grease, silt, or suspended solids.

1.2 Model 370 LevelRay Sensor Design

The radar level sensor consists of a housing with a radar module that is both signal transmitter and echo receiver.

The Model 370 LevelRay is available with a 10 m, 23 m, and 30 m cable lengths with connectors. For greater distances, external connection via conduit, and connection of additional TIENet devices, the TIENet expansion box is available. Bulk TIENet cable may also be used for greater distances.

Figure 1-2 Model 370 LevelRay radar sensor with TIENet plug.

1.3 Operation

The sensor operates at 60 GHz using the FMCW (frequency-modulated continuous-wave) method to determine the distance from the sensor to the surface of liquid. The LevelRay then calculates the liquid level and sends it to the DuraTracker to calculate flow.

⚠ WARNING

This sensor has not been certified for use in "hazardous locations" as defined by the National Electric Code, by the IEC, and by the ATEX directive.

⚠ WARNING

The installation and use of this product may subject you to hazardous working conditions that can cause you serious or fatal injuries. Take any necessary precautions before entering a worksite. Install and operate this product in accordance with all applicable safety and health regulations, and local ordinances.

1.4 Maintenance

If the device is used properly, no special maintenance is required in normal operation.

In some applications, buildup on the radome can influence the measuring result. (The radome (Figure 1-3) is the semicircular enclosure at the bottom of the sensor that houses its radar

antenna.) Depending on the sensor and application, take measures to avoid heavy soiling of the radome. If necessary, clean the radome at certain intervals.

Figure 1-3 The radome.

Clean the sensor with water and a soft cloth while ensuring that the LevelRay housing radome and (on some LevelRay sensors) the pressure transducer grate is clean of debris.

1.5 Technical Specifications

Table 1-1 Model 370 LevelRay Radar Level Sensor Device Specifications[a]	
Sensor Dimensions	2.5" H x 2.38" W x 8.5" L (63.5 mm H x 60.5 mm W x 215.9 mm L)
Cable Length	10, 23, or 30 meters standard (32.8, 75.5, or 98.4 ft)
Mounting Attachment	Mounting plates that attach to 4 through-holes on enclosure body to attach to optional mounting hardware.
Weight	2.3 lbs. (1.0 kg) for 10 m w/o connector 4.5 lbs. (2.0 kg) for 23 m w/o connector 5.7 lbs. (2.6 kg) for 30 m w/o connector
Body Material	HDPE
Enclosure	IP68 when connected and properly sealed with cord-grip fitting or TIENet connector (2m depth for 24 hours)
Temperature Range Operating Storage	 -20 to 60 °C (-4 to 140 °F) -40 to 80 °C (-40 to 176 °F)
Environmental	Relative Humidity: 0 to 100% Max Operating Altitude: 4,000m
Voltage Range	9 – 27 VDC
Power / Current Rating	5 mA continuous with 30 mA peaks during sampling @ 12 VDC 360 mWatts peak
Measurement Range	Minimum: 0 deadband from sensor to liquid surface Maximum: 8m from sensor to liquid surface
Measurement Accuracy	±2 mm (±0.079 in) from 150 mm (5.9 in) to 8 m (315 in) range, and ±5 mm (0.197 in) from 0 mm (0 in) to 150 mm (5.9 in) range Pressure transducer: ±12.7 mm (0.5 in) when submerged
Beam Angle	≤8° 4° From center line
Radar Signal	60 GHz (range: 58 – 63.5 GHz)
Bluetooth[b]	2.4 GHz
Usage	Indoor or Outdoor use in Wet or Dry Locations
Pollution Degree Rating	3
Communication Protocol	TIENet
Maximum rated power with respect to ground:	PWR: 27 VDC RS485: ±5 VDC
Certifications	FCC ID: 2BSNSNCLS IC: 34800-NCLS

a. All specifications are subject to change without notice.

b. The Bluetooth® word mark and logos are registered trademarks owned by Bluetooth SIG, Inc. and any use of such marks by Teledyne Instruments, Inc. is under license. Other trademarks and trade names are those of their respective owners.

1.6 Accessories

Accessories used in sensor installation are briefly described below. Refer to the next section for ordering information.

Wall Mount Bracket – The bracket secures the radar level sensor on a convenient nearby wall over a flow stream, such as the side of a bridge, or other structure.

Floor Mount – The floor mount is a collapsible metal stand attached to the floor, for extending the sensor out over a flow stream.

Scissor Mount – The scissor mount connects to ISCO scissor rings to place the sensor in a 16" to 80" pipe.

Suspension Mount – The suspension mount allows the sensor to be suspended by the cable.

Street Level Mount – The Street Level Installation Tool consists of a mounting ring and a multi-section pole. It lets you install your measurement system from ground level, eliminating the costs and hazards of manhole entry. Pole sections can be combined to access pipe as deep as 15 feet.

Mounting Hardware Kit – Consists of screws, nuts, washers, and ties for the mounts.

1.6.1 Ordering Information

Options and accessories can be purchased by contacting Teledyne ISCO's Customer Service Department.

Teledyne ISCO
Customer Service Dept.
P.O. Box 82531
Lincoln, NE 68501 USA
Phone: 800 228-4373
402 464-0231
FAX: 402 465-3022
E-mail: isco.orders@teledyne.com

1.6.2 TIENet Model 370 LevelRay sensor

Model 370 LevelRay radar level sensor with connection ending in TIENet plug.

370 LevelRay radar level sensor w/ connector and 10m cable w/ pressure . 60-4874-111

370 LevelRay radar level sensor w/ connector and 23m cable w/ pressure . 60-4874-112

370 LevelRay radar level sensor w/ connector and 30m cable w/ pressure . 60-4874-113

* Cable lengths can go up to 150 m with an expansion box (60-4357-018).

LevelRay Wall Mounting Bracket 60-4877-002

Floor Mount for horizontal surfaces 60-4877-003

Scissor mounts 60-4877-004

Street Level mount (min 12") 60-4877-005

Suspension mount 60-4877-006

Mounting hardware kit 60-4877-007

Model 370 LevelRay Radar Level Sensor

Section 2 Installation and Setup for the DuraTracker

The DuraTracker does not have to be mounted near the flow stream. You can install the flow meter itself at a convenient, protected location and route the sensor cable to the measurement point. Proper installation of the Model 370 LevelRay radar level sensor is critical for accurate measurement.

2.1 Sensor Installation Considerations

Measurement accuracy can be affected by several site factors that should be taken into consideration when selecting the location for the sensor. If the sensor cannot obtain a valid reading, an asterisk (*) appears next to the displayed level, indicating that there is an error.

2.1.1 Beam Angle

The LevelRay sensor has a ≤8° beam angle, forming a cone whose apex is the center of the LevelRay housing *radome*, the semicircular enclosure at the bottom of the sensor that houses its radar antenna. The sensor can best detect surfaces within this cone; detection of surfaces outside of this cone is greatly attenuated. Narrow channels can result in false echoes and incorrect level readings off of the walls, obstructions, and sides of the channel. .

2.1.2 Humidity

The sensor can operate in conditions of extremely high or low humidity. Water droplet condensation buildup on the sensor's bottom surface will slightly attenuate the signal, but it will continue to perform.

2.1.3 Surface

Solids, foam, oil, and turbulence can all absorb or weaken the radar return, causing errors in detection. Foam and oil on the surface of the stream can produce false level readings.

2.1.4 Temperature

If the sensor will be installed outdoors in direct sunlight, use of a sunshade (not supplied) can help to prevent overheating of the sensor housing.

2.1.5 Waves

Waves on the surface of the flow stream can deflect the radar signal, causing erroneous readings or total loss of signal. The DuraTracker software can reject occasional readings that deviate substantially from normal.

2.2 Connecting the Cable

⚠ WARNING

Carry out electrical connection by trained qualified personnel authorized by the plant operator. Only connect or disconnect in de-energized state.

The Model 370 LevelRay radar level sensor connects to the DuraTracker flow meter in the same manner as other external TIENet devices. Such connections usually use conduit for permanent mounted meter or a TIENet receptacle for portable meters. Multiple external TIENet devices can be connected simultaneously.

Refer to the DuraTracker Flow Meter manuals for instructions for accessing the instrument's interior components.

2.2.1 Connecting to DuraTracker via a TIENet Receptacle

The optional external TIENet devices all scan the hardware in the same manner. A scan is required anytime a new TIENet device is added.

The following TIENet devices will attach to the TIENet receptacle:

- 370 Radar Level Sensor
- 310 Ultrasonic Level Sensor
- 350 Ex Area Velocity Sensor
- 301 pH Interface
- 360 LaserFlow Velocity Sensor
- 306 Sampler Interface
- 305 SDI-12 Rain Interface

O-ring and lubrication for the TIENet receptacle

1. Coat the O-ring's sealing surface with a silicone lubricant.

⚠ CAUTION

Do not use petroleum-based lubricants. Petroleum-based lubricants will cause the O-ring to swell and eventually deteriorate. Aerosol silicone lubricant sprays often use petroleum-based propellents. If you are using an aerosol spray, allow a few minutes for the propellent to evaporate before proceeding.

2. Align and insert the connector. The sensor release will "click" when the sensor connector is fully seated.
3. Connect the two caps together.

2.3 Sensor Installation

The mounting location of the LevelRay sensor depends on the type of primary measuring device (such as a weir or flume), and on the method of level-to-flow conversion used in the DuraTracker. Refer to the *Isco Open Channel Flow Measurement*

Handbook or to instructions provided by the manufacturer of the primary device for detailed information about locating the measuring point.

If you intend to measure flow by some other means, such as a gravity flow equation (Manning) or by calibrating a section of the flow channel, you must locate the measuring point on the basis of the hydraulic characteristics of the channel as well as the level-to-flow conversion method.

In most open channel installations where the level may exceed one-half of full pipe, mount the sensor to be as near as possible to the midpoint between the entrance and exit to measure over the least turbulent flow.

2.3.1 Dead Band

The radar sensor does not have a dead band and can measure liquid level all the way to having liquid touch the LevelRay housing radome. However, accuracy decreases within 150 mm range of sensor, so a minimum distance greater than 150 mm is recommended for best results.

2.3.2 Sensor Measuring Range

At ranges greater than 150 mm of the radome, level readings are accurate within 4 mm (that is, 2 mm to either side) of the center of the radome.

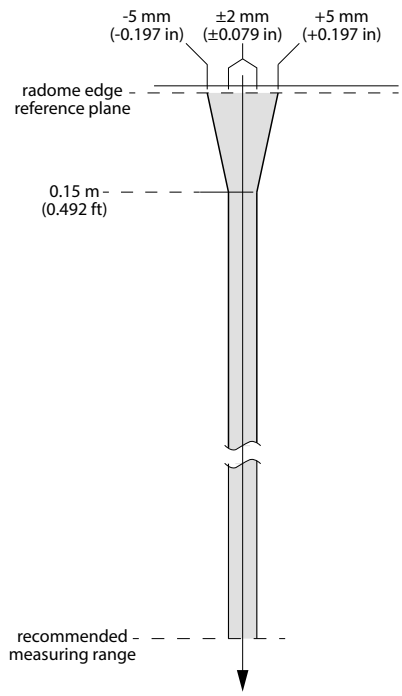

Figure 2-1 Antenna beam angle

2.3.3 Submersion and Fouling

Fouling by grease or solids can cause the sensor to malfunction. The sensor is sealed, so unless it was exposed to corrosive substances, temporary accidental submersion should not harm it.

Upon retrieval, the sensor should return to normal operation, but if sensor readings are impacted, the sensor may require removal of debris. Clean the sensor with water and a soft cloth while ensuring that the sensor housing radome and the pressure transducer grate is clean of debris.

The level measurement will switch from radar to pressure transducer when the sensor is submerged and continue to provide level measurement.

2.3.4 Leveling

The sensor reports its X- and Y-axis orientation to the DuraTracker or other devices as positive or negative numbers, accurate to within ±3 degrees. These readings are explained in Figure 2-2:

Figure 2-2 LevelRay X- and Y-axis readings.

Changes in X- or Y-axis values may indicate that the sensor has moved during, for example, a surcharge event.

2.3.5 Mounting Options

The Model 370 LevelRay sensor can be mounted over the flow stream in various ways, depending on which method best fits the application.

Optional equipment is available from Teledyne ISCO for wall, floor, suspension, and scissor or spring ring mounting (see Section 1.6, *Accessories*). The sensor has a mounting plate that allows it to attach to the equipment listed. The sensor cable can be routed through user-provided conduit back to the DuraTracker Flow Meter.

Regardless of the mounting method you select, always place the sensor over the center of the stream. After installation, and in the event that the sensor is submerged, a change in the accelerometer reading in the Cipher GO! software application for the flow meter may be used to detect if the sensor's mounting position has changed. Changes in reported X- or Y-axis values may also indicate this.

Note

Do not pull on cable to remove the LevelRay, as you may damage the unit.

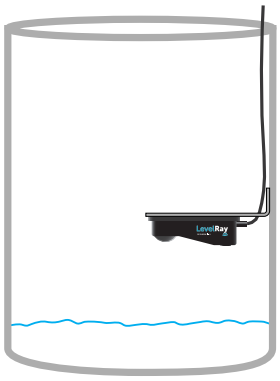

Wall Mount

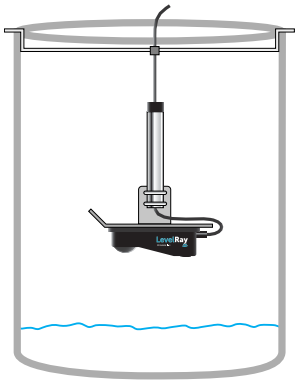

Suspension

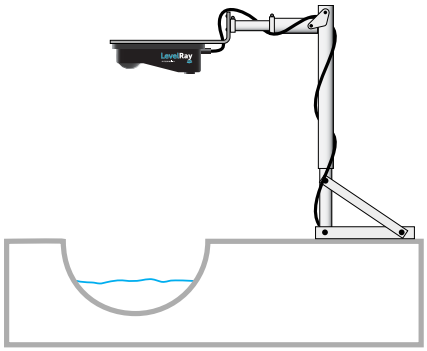

Floor Stand

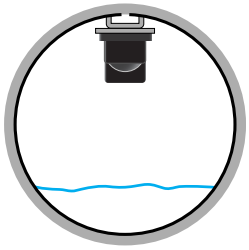

Pipe

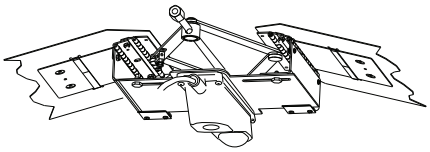

place scissor mount in assembly

Place scissors assembly in scissor ring

for 5/8" socket wrench

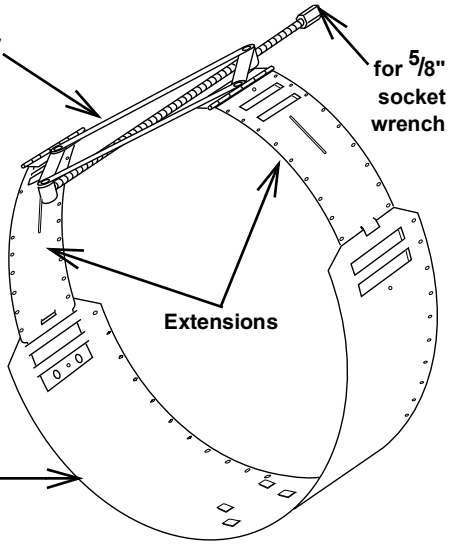

Extensions

Tighten the scissors assembly to expand the ring to press firmly against the inner pipe wall, securing the ring.

Base Section

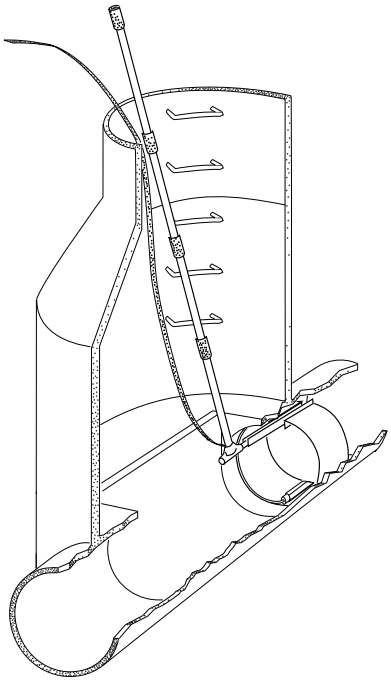

Street Level Installation

⚠ WARNING

This sensor has not been certified for use in "hazardous locations" as defined by the National Electric Code, by the Canadian Electrical Code, by the IEC, and by the ATEX directive.

2.4 Installation

2.4.1 Electrical Requirements

Carry out electrical connection by trained qualified personnel authorized by the plant operator. Only connect or disconnect in de-energized state.

2.4.2 Ambient Environment

Installation in all environments must fall within the temperature range of -20 to +60° C (-4 to 140 °F).

2.4.3 Radio Frequency Radiation

⚠ CAUTION

Install the sensor at least 20 cm from places where people may gather to minimize radio frequency radiation exposure.

⚠ ATTENTION

Installez le capteur à au moins 20 cm des lieux où des personnes sont susceptibles de se rassembler, afin de minimiser l'exposition aux rayonnements de radiofréquence.

2.5 Configuring the System with an ISCO Logger

Use the Cipher GO! or Flowlink application on a laptop computer to configure the Model 370 LevelRay radar level sensor with the DuraTracker. Connection to the DuraTracker to configure the system will be achieved by USB by Bluetooth pairing.

2.5.1 DuraTracker Setup

2.5.1.3 Flowlink

To configure the DuraTracker for operation with the LevelRay Sensor:

1. Select the TIENET tab and check if the attached sensor is listed in the Active TIENet Devices section.

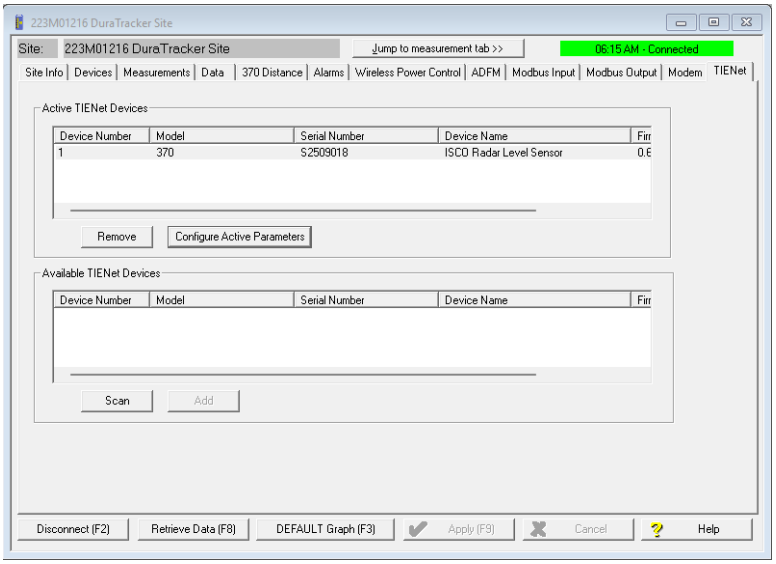

   a. If the device does not appear, select SCAN, then ADD the sensor once it appears in the Available TIENet Devices section. The Configure TIENet Measurements window then appears.

   b. Choose parameters to add. The parameter names can be modified at this point as well. Check the box next to a parameter to configure it. Remove the parameter from those to be configured by deselecting its checkbox.

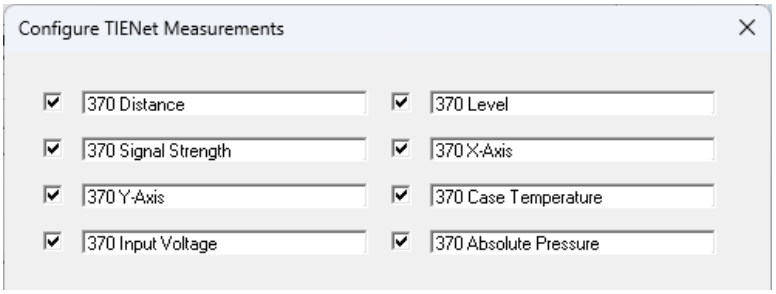

   c. If the sensor is already listed in the Active TIENet Devices section, the Configure TIENet Measurements window can be opened by selecting CONFIGURE ACTIVE PARAMETERS.

2.5.1.4 Cipher GO!

To configure the DuraTracker for operation with the LevelRay Sensor using Cipher GO! software when it is connected to the DuraTracker:

1. Open Cipher GO! and navigate to the CONFIGURE tab.

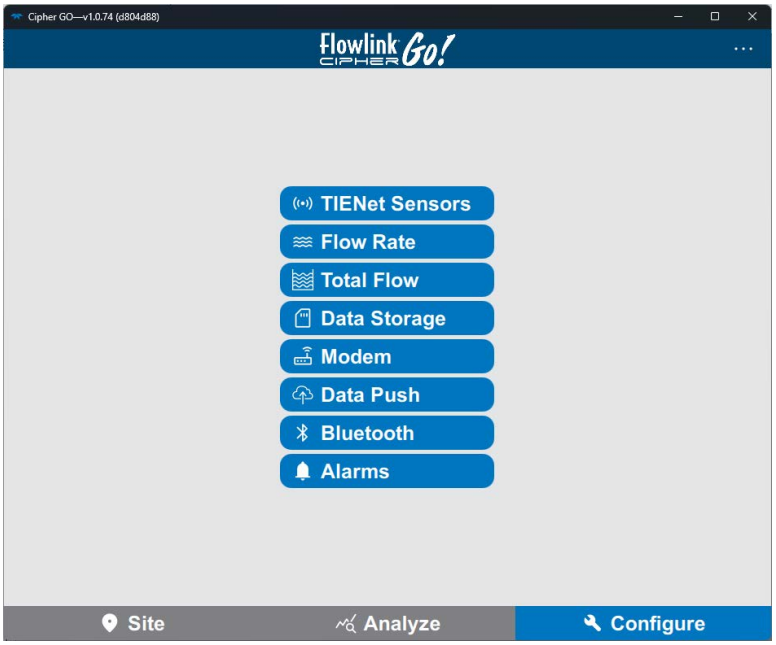

2. Select TIENet Sensors and check if the attached sensor is listed under Available Sensors and shown with a gear symbol.

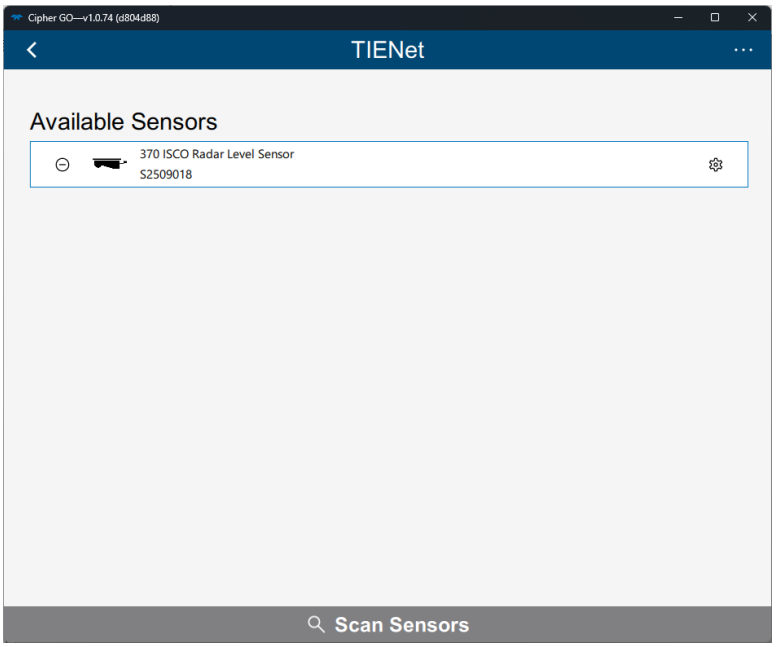

3. If not, select SCAN SENSORS and then ADD the sensor once it appears in the Available TIENet Devices list by selecting the '+' sign to the left of the sensor's name.

Select the gear icon to configure the sensor. In the Configure TIENet device view you can disable sensor parameters as needed.

4. Configure the Level settings as needed by expanding the 370 LEVEL tab. To make changes when entering values, either press ENTER or move to a different entry for the APPLY/UNDO selections to appear on the bottom. Selecting APPLY writes all settings currently altered on the page.

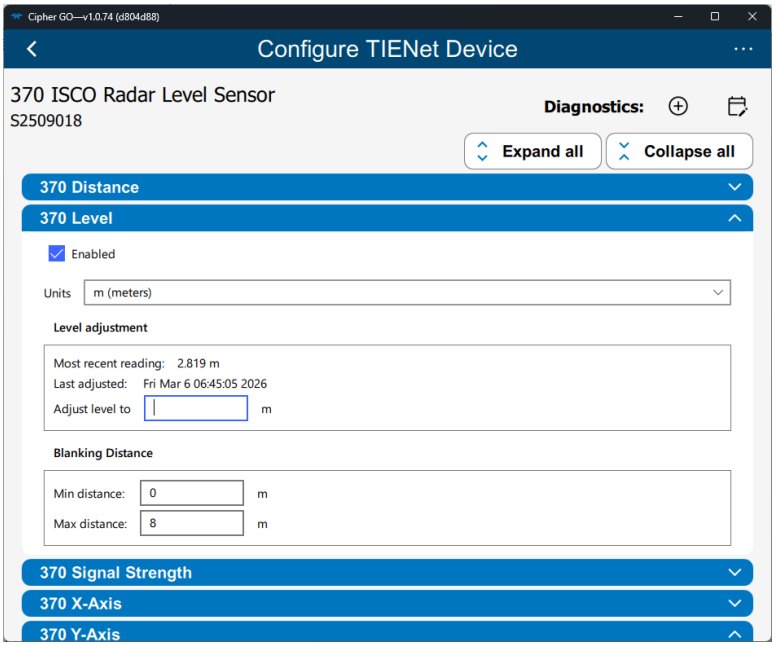

About Blanking Distance options

Min distance – The shortest distance from the radome (i.e., the highest expected liquid level). Because there is no dead band, this value can be so low as to have liquid touching the LevelRay housing radome. That is, it can be zero. And it should be zero if the LevelRay has a pressure sensor and you want it to continue to report level when submerged.

However, accuracy decreases within 150 mm range of sensor, so a minimum distance greater than 150 mm is recommended for best results. Depending on the elevation of your sensor, this value may be increased to help ensure that echoes read by the flow meter come only from the surface of the flow stream, and not off the walls or sides of the channel.

Note

Setting the minimum blanking distance to a value other than zero will stop the pressure sensor from providing level when submerged.

Max distance – The distance between the radome face and the bottom of the channel, or zero level. You can enter a slightly larger value than calculated (for example, 0.4–0.8" (10–20 mm)) to make sure the sensor accurately reports the bottom of the channel.

2.5.1.5 Connecting and Authenticating

1. Start the Cipher GO! software. Select CONNECT TO DEVICE, then choose BLUETOOTH.
2. Choose the sensor from the list under Nearby Devices and select CONNECT.

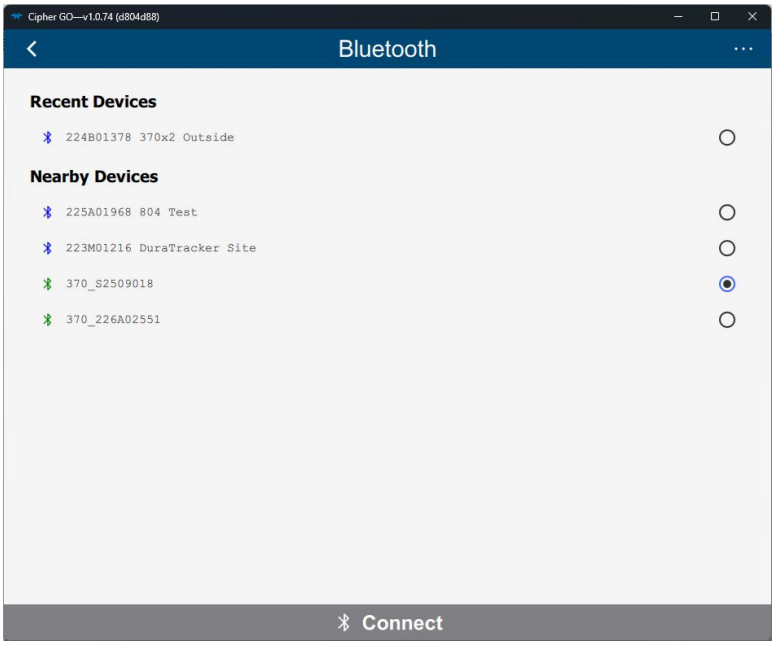

3. Enter the Access Authentication Passkey (printed on the label next to the Bluetooth symbol) if this is the first time connecting to the device with the Cipher GO! database.

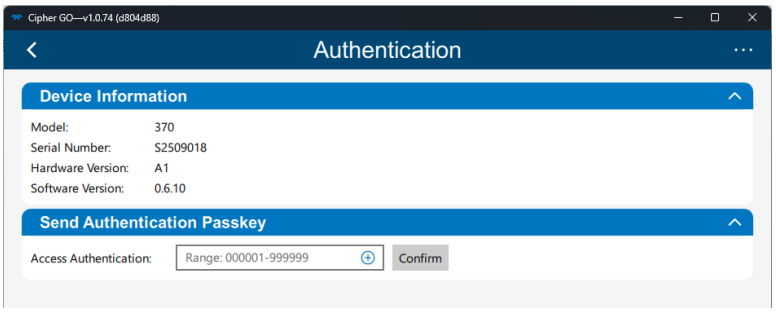

The SITE tab is displayed when the passkey is accepted. This tab provides a way to change the site NAME and to list the device information and the current status.

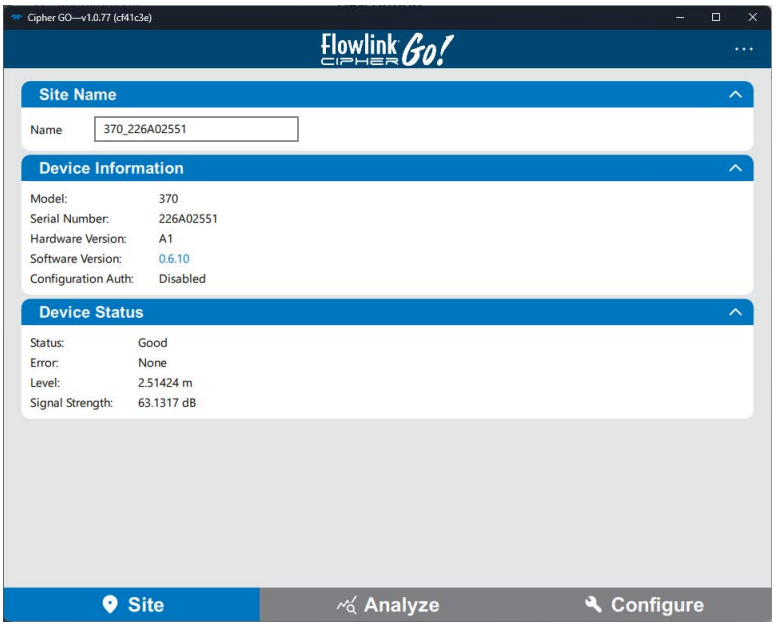

Note

If Configuration Authentication is configured for the sensor, the Configuration Authentication Passkey must be entered before the setting of sensor configuration is allowed. The code is stored in memory in Cipher GO! and does not have to be entered again.

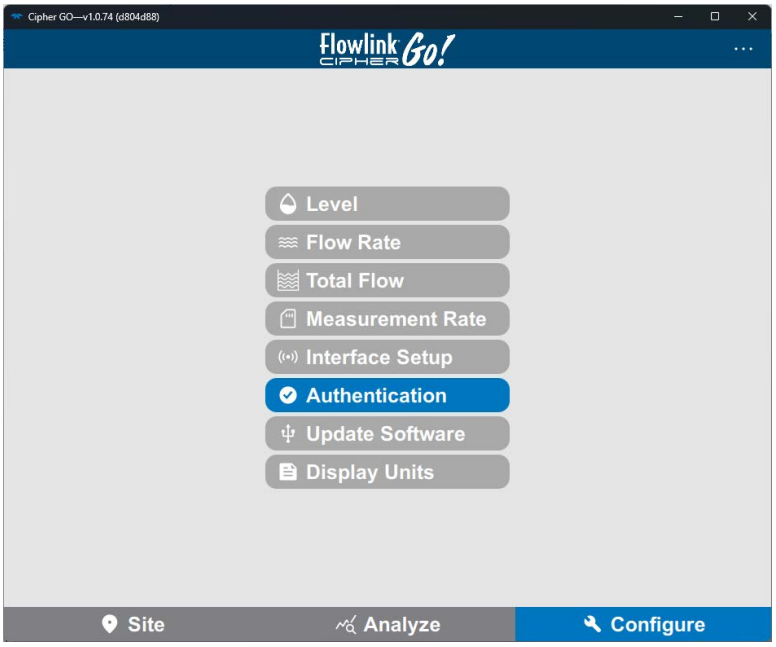

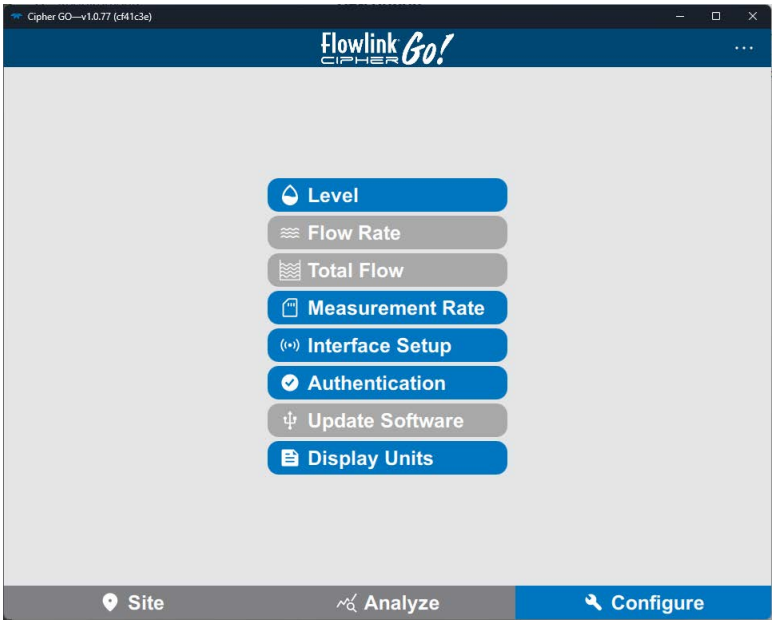

The Configuration Authentication Passkey can be disabled by changing the Passkey to all zeroes (000000).

Once Configuration Authentication has been confirmed, all current configuration options become blue and selectable.

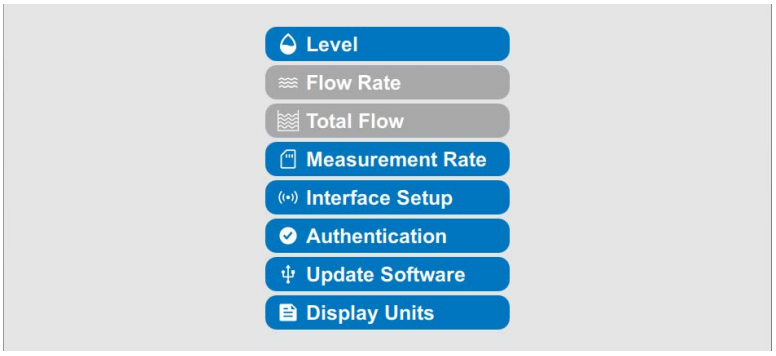

2.5.1.6 Update Software

Updating the sensor's software via Cipher GO! directly connected to the sensor is preferred. This takes approximately five minutes as opposed to approximately thirty minutes when done using the Update Software utility while connected to the DuraTracker.

Update Software selects the update file via File Explorer. By default, a 0370*.bin filter is set for selectable files. This filter can be altered to allow for all .bin files in the event the filename was changed.

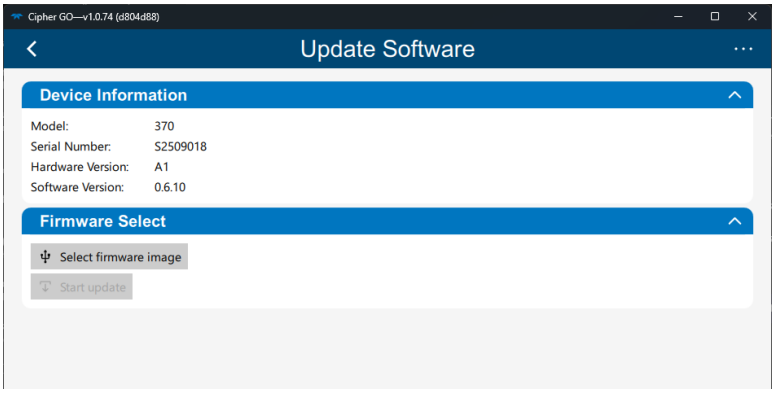

START UPDATE begins the file transfer.

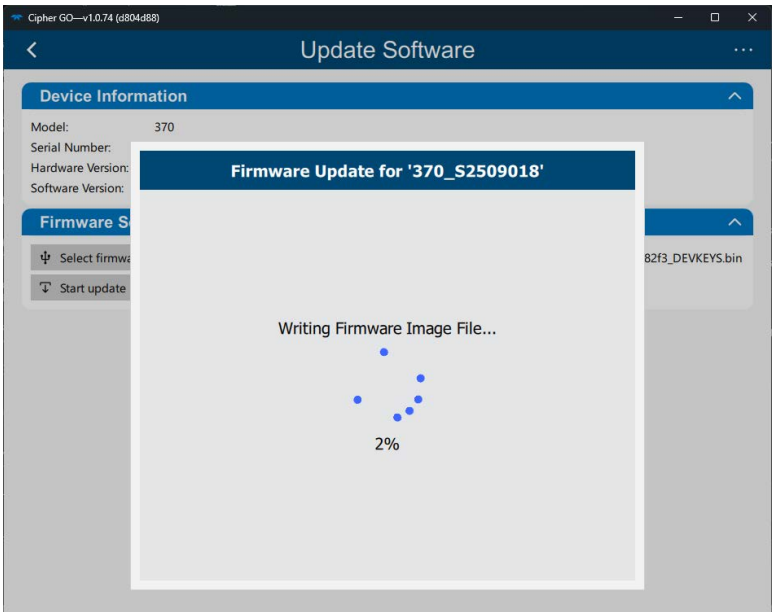

Once file transfer is complete, the sensor takes approximately 2 minutes to finish updating. The sensor disconnects to complete the update, then Cipher GO! notifies the user when the sensor is disconnected. Cipher GO! automatically attempts to reconnect to the sensor once it detects the sensor is available again.

2.6 Level Calibration

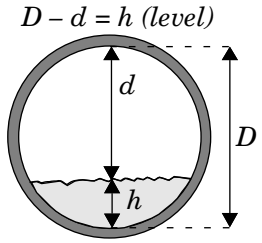

Although all other programming steps can be performed off-site, level must be set at the measurement site following installation.

Once the sensor is installed over the flow stream, measure the present liquid level (see figure at left) and enter this value for LEVEL, under ADJUST OPTIONS. Select ADJUST to perform the adjustment.

2.7 Firmware Updates

The TIENet device's firmware is updated via the "Update Software" tool from Flowlink for the DuraTracker Flow Meter. Step-by-step instructions for updating the firmware can be found in the Help text of the update application.

2.8 Troubleshooting the Model 370 LevelRay

Table 2-1 Troubleshooting the Model 370 LevelRay Radar Level Sensor

Symptom	Cause	Action
Invalid level; display has asterisk (*) by level reading	Not scanned	Perform a smart sensor scan
	Not able to achieve signal lock (misalignment, loose mounting, turbulence, foam, or debris in the water)	Adjust mounting or place over a different section of the flow stream.
	Level outside of the Blanking distances	Adjust min/max blanking distances
	Not wired correctly	Check/repair wiring
	Failed sensor	Replace with known good sensor
Incorrect level reading	Level not adjusted properly	Readjust level calibration (Section 2.6)
	Sensor misaligned	Realign sensor
	Objects in the path of the signal	Adjust min/max blanking distances and/or reposition sensor.
	Sensor exposed to direct sunlight	Shade the sensor from the sun.
	Pressure transducer clogged with debris	Gently rinse debris from pressure sensor

Table 2-2 Flowlink Error Codes

Description	Errors
Distance(meters) Level(corrected) (meters) Signal Strength(dB)	1: Radar communication error
	2: No target Data, Radar communicated, but all measurement attempts resulted in an error.
	3: Radar communication repeatedly timed out and was recovered
	4: Sensor failed to communicate with Radar Module at startup.
	5: Insufficient samples, radar communicated but no target met signal threshold
X angle(degrees) Y angle(degrees)	2: An error occurred while taking the measurement
	4: Accelerometer not found
Internal Temperature(Deg C)	1: ADC Conversion returned an error
	5: No temperature Channel initialized
Input Voltage(post protec-tion)	1: ADC Conversion returned an error
	5: No input voltage Channel configured
Preassure(pascals*)	2: ADC Conversion returned an error
	3: No temperature found
	4: No pressure Channel initialized

2.9 Contact Teledyne ISCO

If you have further questions about the installation, operation, and maintenance of your TIENet device, please contact our service department at:

Teledyne ISCO
4700 Superior Street
Lincoln, NE 68504 USA

Phone: 866 298-6174
402 464-0231
FAX: 402 465-3022

E-mail: iscowatersupport@teledyne.com

Model 370 LevelRay Radar Level Sensor

Appendix A Replacement Parts

A.1 Replacement Parts

Replacement parts can be purchased by contacting Teledyne ISCO's Customer Service Department.

Teledyne ISCO
Customer Service Department
P.O. Box 82531
Lincoln, NE 68501 USA

Phone: (800) 228-4373
(402) 464-0231
FAX: (402) 465-3022

E-mail: isco.orders@teledyne.com

A.1.1 TIENet 370 LevelRay Radar Level Sensor Replacement Parts

370 LevelRay radar level sensor w/ connector and 10m cable..... 60-4874-111

370 LevelRay radar level sensor w/ connector and 23m cable..... 60-4874-112

370 LevelRay radar level sensor w/ connector and 30m cable..... 60-4874-113

370 Mounting Hardware Kit 60-4877-007

1-1 DuraTracker monitoring system with a LevelRay sensor (mounting hardware not shown) 1-1
1-2 Model 370 LevelRay radar sensor with TIENet plug. 1-2
1-3 The radome. 1-3
2-1 Antenna beam angle 2-3
2-2 LevelRay X- and Y-axis readings. 2-5