7RYMS

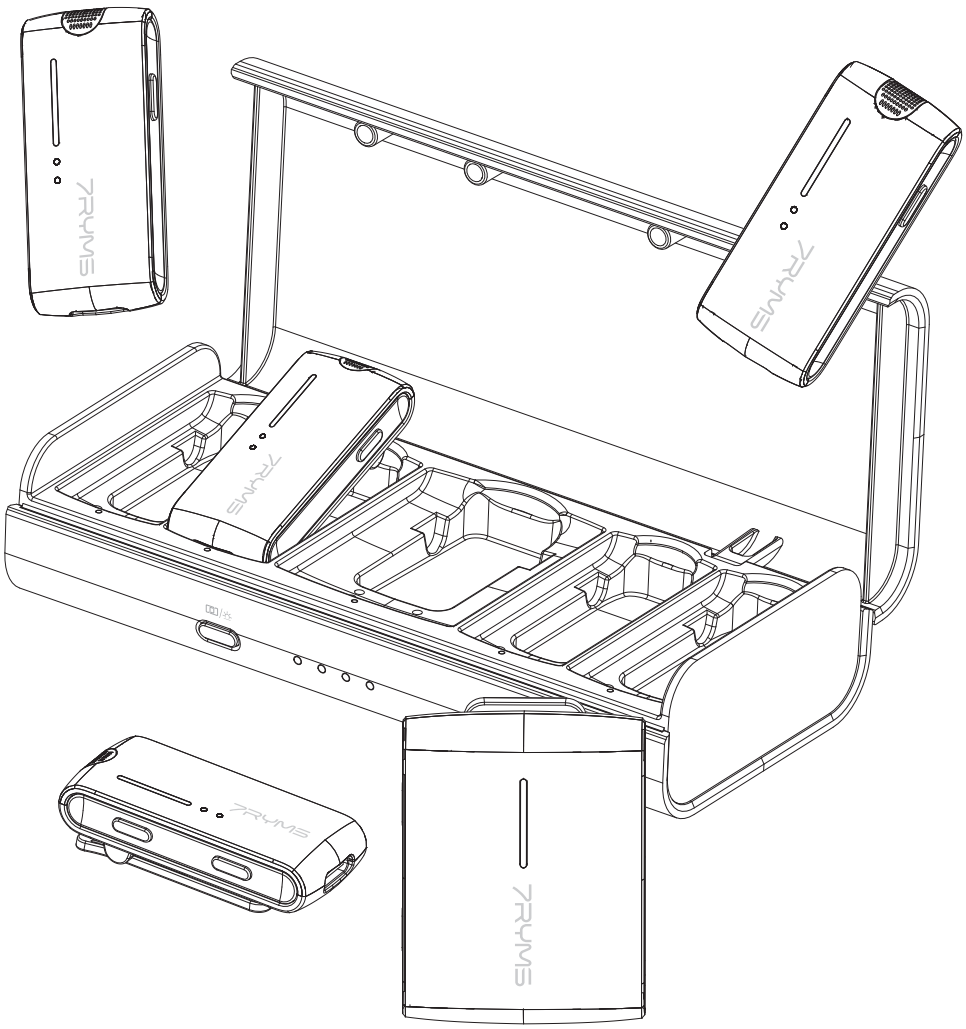

iRay DW40

Four-channel Mini Wireless Microphone

User Manual

Foreword

Thanks for purchasing iRay DW40

Features

· Four-channel Wireless Microphone, Support Multi-person Recording
· 48kHz/24bit Recording, Broadcasting-level Sound Quality
· Digital/Analog Output Modes, Universal for Camera/Phone/PC
· Support Real-time Monitoring and One-key Denoise
· Support One-key Muting, Volume Control, and M/S Switch
· USB-C Charging Port, Support Charging While Using
· Charging & Storing Case, Operating Time Up to 10 Hours
· Low Latency < 20ms, Working Range Up to 200 Meters(Open Area)

Notice

⚠ It is better to keep face to face when using it and not turn your back to the receiver. Otherwise, it is easy to generate breakpoints, which is a normal phenomenon
⚠ Please notice that the STEREO function can not be realized when recording in single-channel
⚠ The product is a high-precision equipment, please prevent it from falling, collision, or pounding
⚠ Do not use this device near sources of heat or interference, such as radiators, ovens, refrigerators, air conditioners, etc
⚠ If the sound pickup distance is close or record outdoors, please put the wind muff on the transmitter to prevent sound bursting or reduce wind noise
⚠ Please keep the product in a dry environment; do not use the equipment in rainy or damp environments to avoid short-circuit danger

Packing List

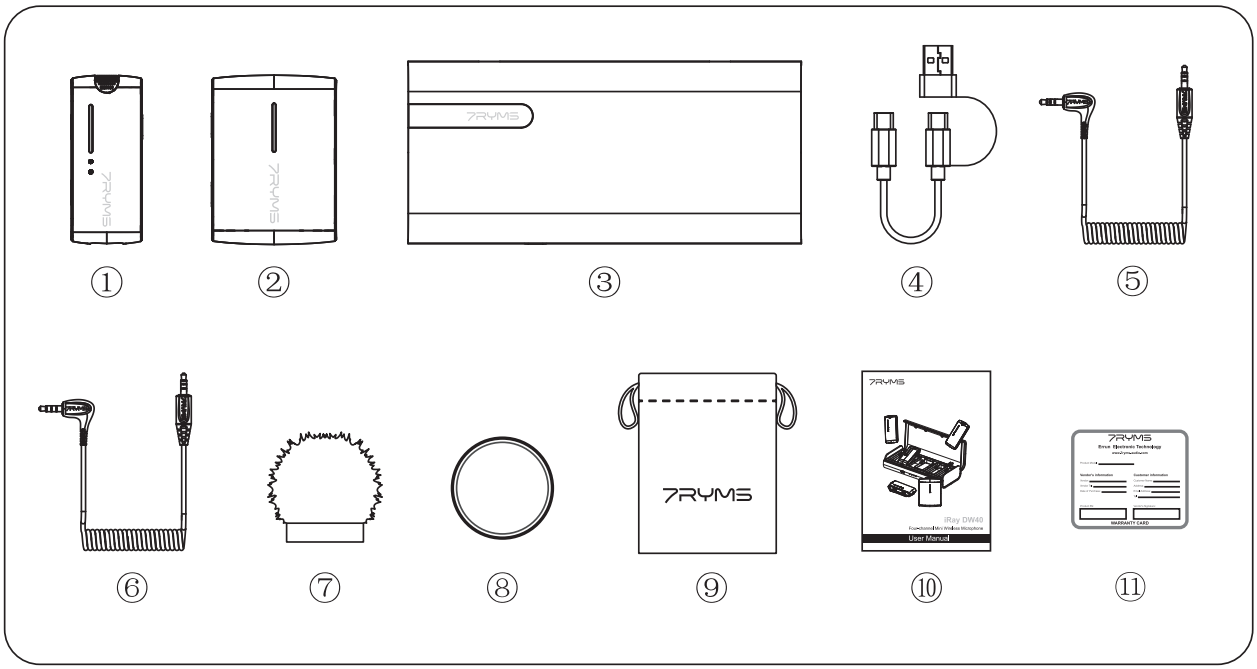

1. Transmitter(TX) *4
2. Receiver(RX)
3. Charging Case
4. 2-in-1 Charging/Audio Output Cable
5. 3.5mm TRS-TRS Audio Cable
6. 3.5mm TRS-TRRS Audio Cable
7. Wind Muff *4
8. Magnetic Plate *4
9. Carrying Pouch
10. User Manual
11. Warranty Card

Transmitter(TX):

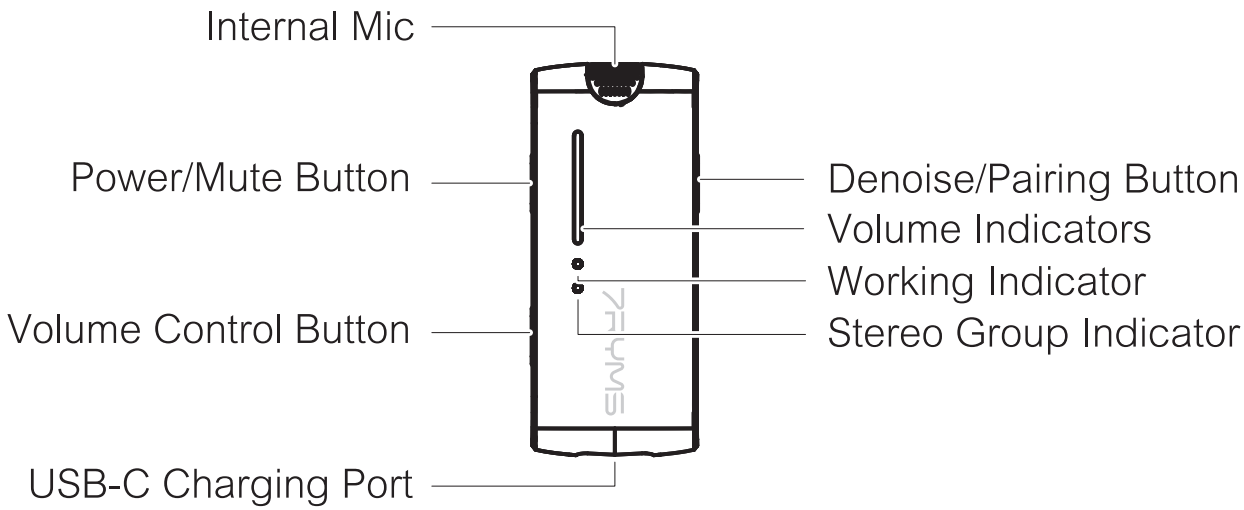

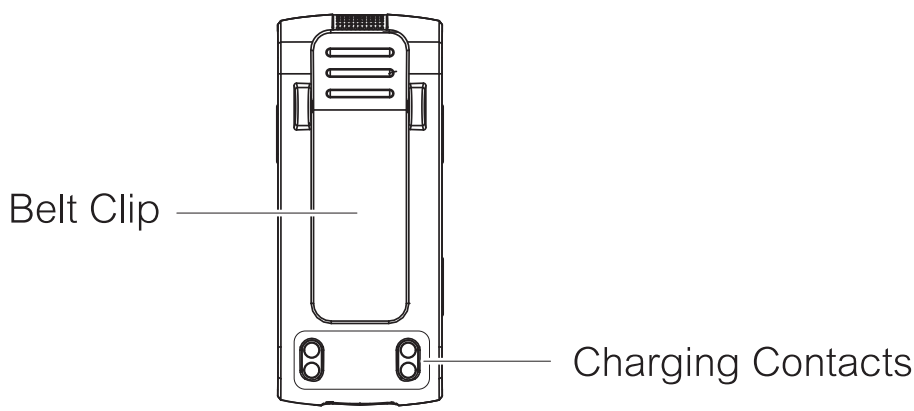

1.Internal Mic

2.Power/Mute Button

Long press to turn on/off the transmitter. Short press to mute

3.Volume Control Button

Short press to cycle through the volume levels

4.Denoise/Pairing Button

Short press to turn on/off denoise; long press to pair

5.Volume Indicators

Show microphone volume. There are four levels of volume and four indicators. Each indicator represents one volume level

6.Working Indicator

Status	Indicator
Unpaired	Blinks blue slowly
Pairing	Blinks blue rapidly
Paired	Shows blue/green
Mute on	Shows red
Mute off	Shows blue/green
Denoise on	Shows green
Denoise off	Shows blue/green

7.Stereo Group Indicator

In stereo mode, A/C channel is the left channel and the blue light on; B/D channel is the right channel and the green light on. In mono mode, the blue light on

8.USB-C Charging Port

Connect to power bank/DC power supply through the 2-in-1 charging cable to charge

9.Belt Clip

10.Charging Contacts

Receiver(RX):

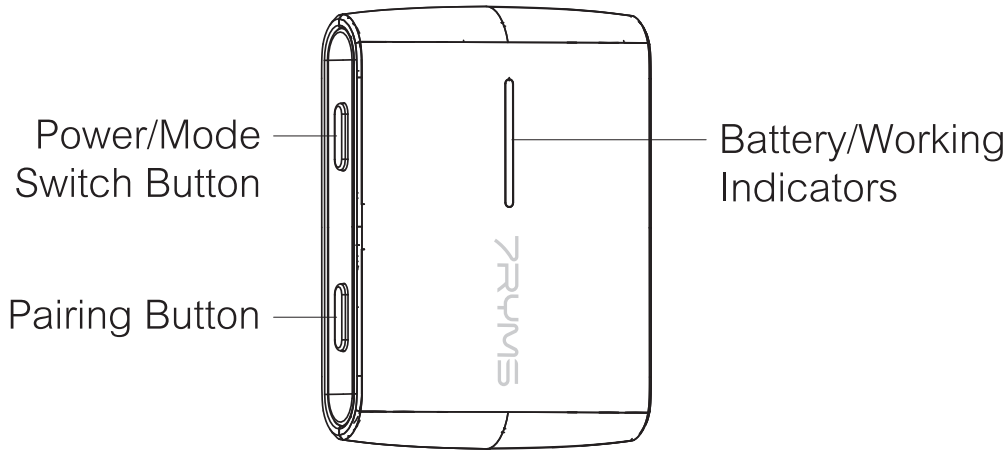
Power/Mode
Switch Button
Pairing Button
Battery/Working
Indicators
7RYMS

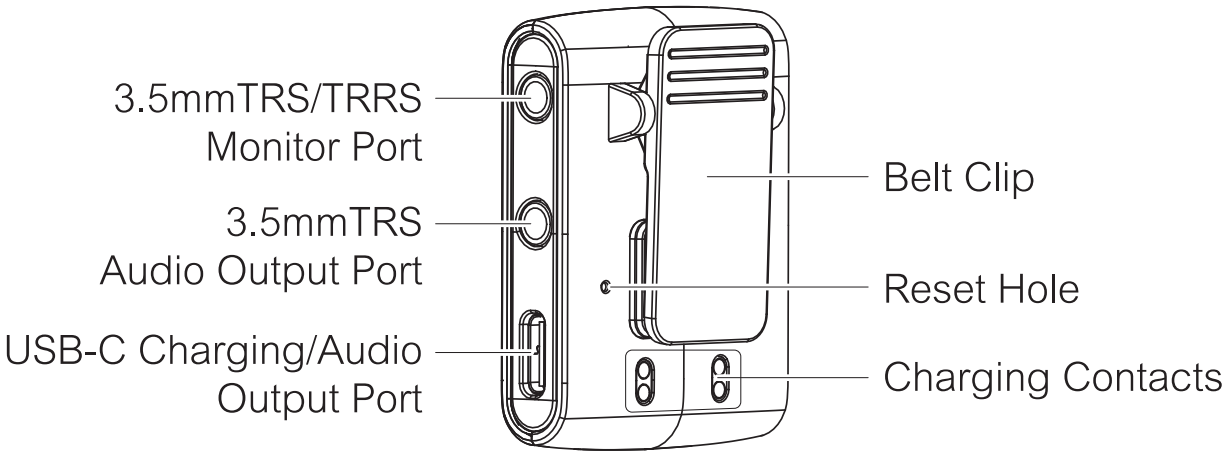
3.5mmTRS/TRRS
Monitor Port
3.5mmTRS
Audio Output Port
USB-C Charging/Audio
Output Port
Belt Clip
Reset Hole
Charging Contacts

1.Power/Mode Switch Button

Long press to turn on/off the receiver. Short press to switch mono /stereo mode

2.Pairing Button

Long press to pair

3.Battery/Working Indicators

3.1.Show the receiver's battery life

Indicator Status	Four indicators on	Three indicators on	Two indicators on	One indicator blinks red slowly
Receiver's Battery	80%-100%	60%-80%	40%-60%	<20%

3.2.Show the receiver's charging status

Show red when charging; blue when fully charged

3.3.Show mode

Show blue in mono mode, green in stereo mode

4.3.5mmTRS/TRRS Monitor Port

Insert a 3.5mmTRS/TRRS headphone to monitor

5.3.5mmTRS Audio Output Port

Connect with devices to output audio
In mono mode, output mixed audio from A/B/C/D four channels;
In stereo mode, output two individual audio. A/C channel is the left channel; B/D channel is the right channel

6.USB-C Charging/Audio Output Port

Connect with power bank/DC power through the 2-in-1 cable to charge; or connect with devices to output digital audio

7.Reset Hole

Insert reset pin to reset when there are abnormal phenomena such as charging disability

8.Belt Clip

9.Charging Contacts

Charging Case:

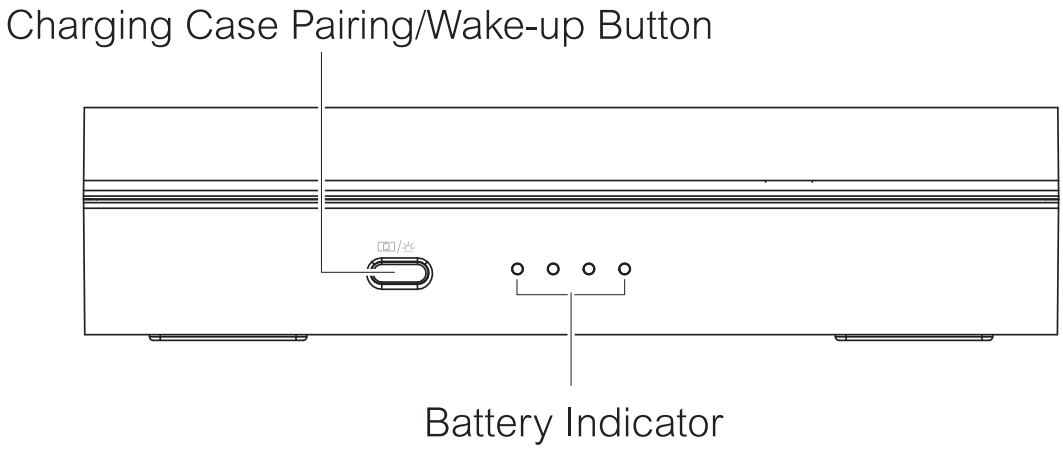

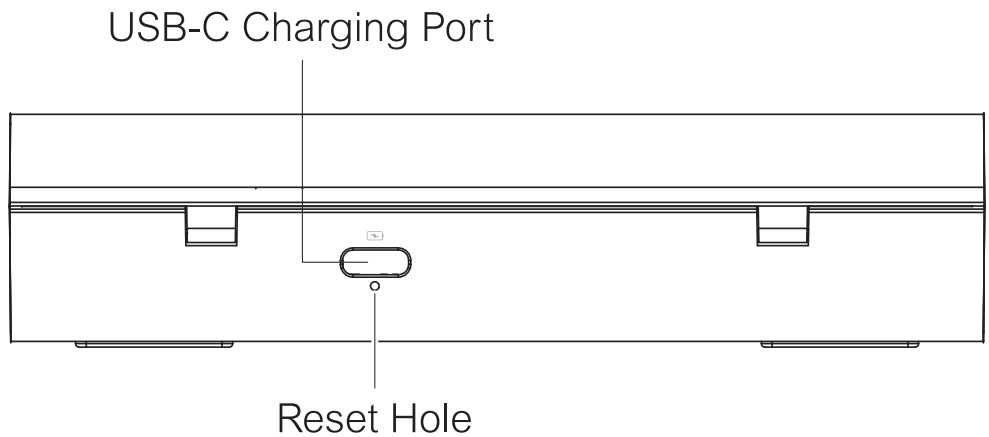

1.Charging Case Pairing/Wake-up Button
Short press to show charging case battery; long press for the microphone to pair

2.Battery Indicator
Four indicators, each represents 25% battery of the charging case

3.USB-C Charging Port
Connect to power bank/DC power supply through the 2-in-1 charging cable to charge

4.Reset Hole
Insert reset pin to reset when there are abnormal phenomena such as charging disability

Installation and Usage

Pairing(All have been paired by default, if you need to re-pair, please follow the instructions below.)

Method I: Place the transmitter and the receiver within one meter. Long press power buttons to turn them on and long press the pairing buttons to enter the pairing state. During the pairing state, the working indicator of the transmitter alternately blinks red, blue and green and which of the receiver blinks blue/green rapidly. The working indicator of TX/RX show blue/green when paired

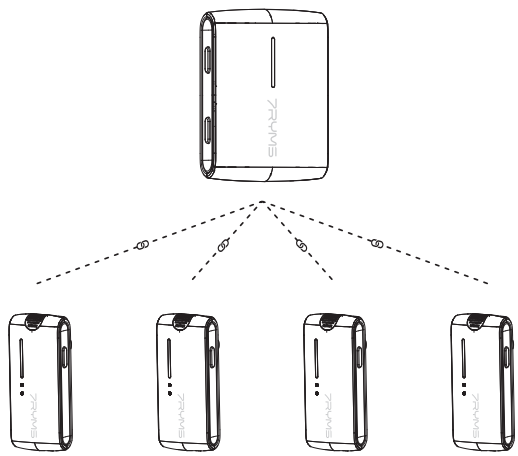

Method II: Place the receiver and transmitter in the charging case. Long press the pairing button on the charging case, the TX and RX will enter the pairing state. During the state, the working indicator of the transmitter alternately blinks red, blue and green and which of the receiver blinks blue/green rapidly. The working indicator of TX/RX show blue/green when paired

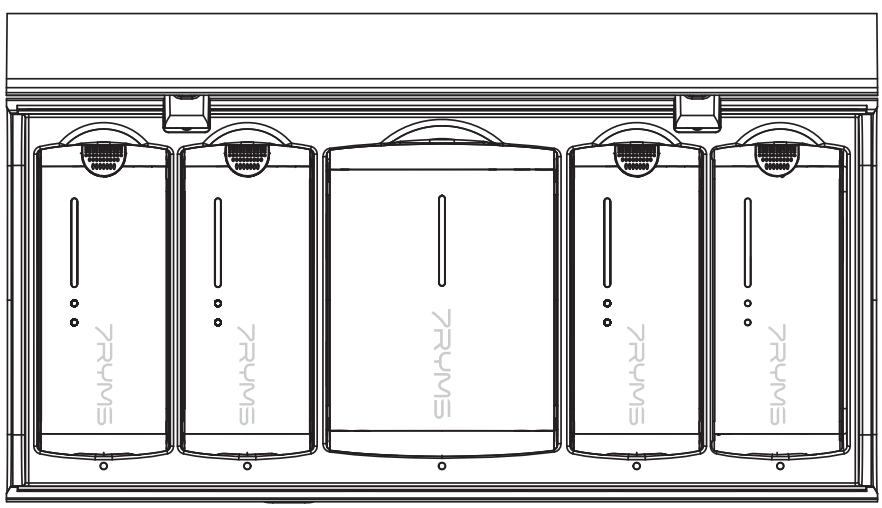

Installation Method：

Transmitter(TX):

Install the transmitter on the collar and make the internal microphone point to the sound source

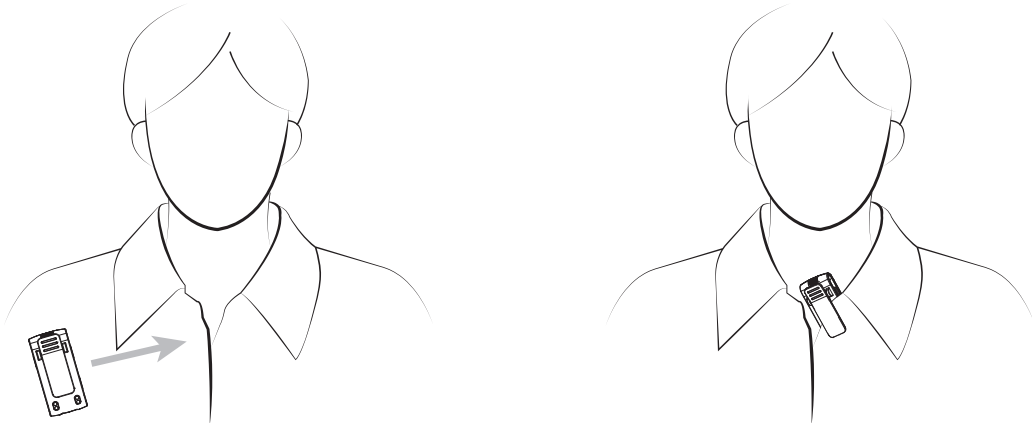

It is recommended to fix the belt clip outwards for better concealment

Receiver(RX):

Analog Output

Connect the receiver with camera through the 3.5mm TRS-TRS audio cable; Connect the receiver with smartphone/computer through the TRS-TRRS audio cable and relevant OTG adapter/adapter cable. Monitor or not according to your needs(Please purchase the relevant adapter/adapter cable by yourself.)

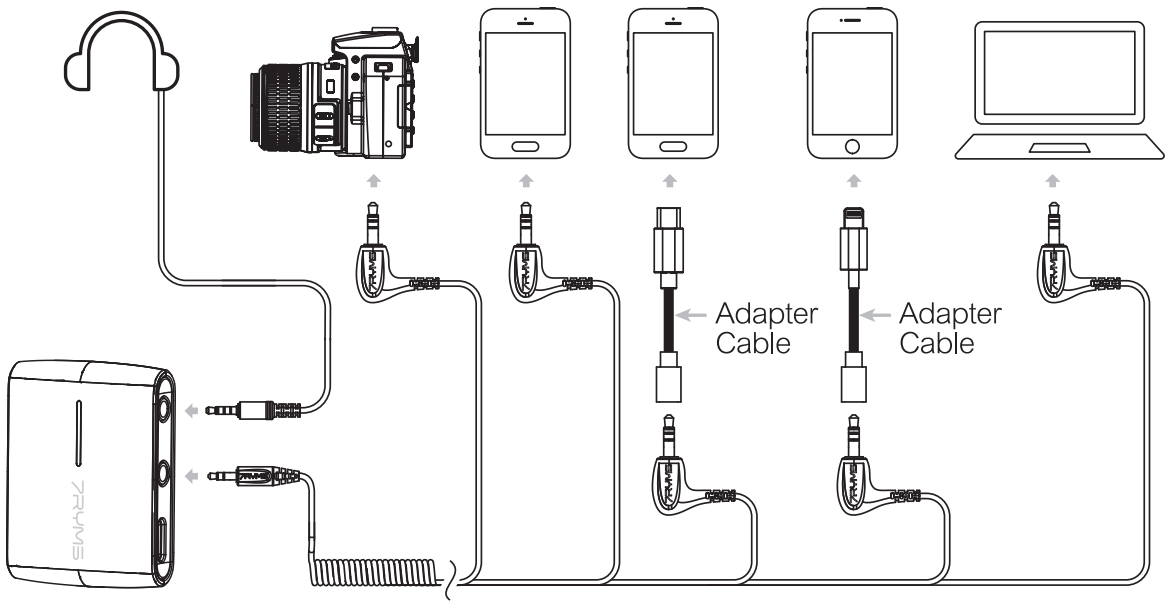

In stereo mode, A/C channel is the left channel; B/D channel is the right channel

Digital Output

Connect receiver with smartphone/computer through 2-in-1 audio cable and relevant OTG audio adapter cable/adapter. Monitor or not according to your needs(Please purchase the relevant adapter /adapter cable by yourself.)

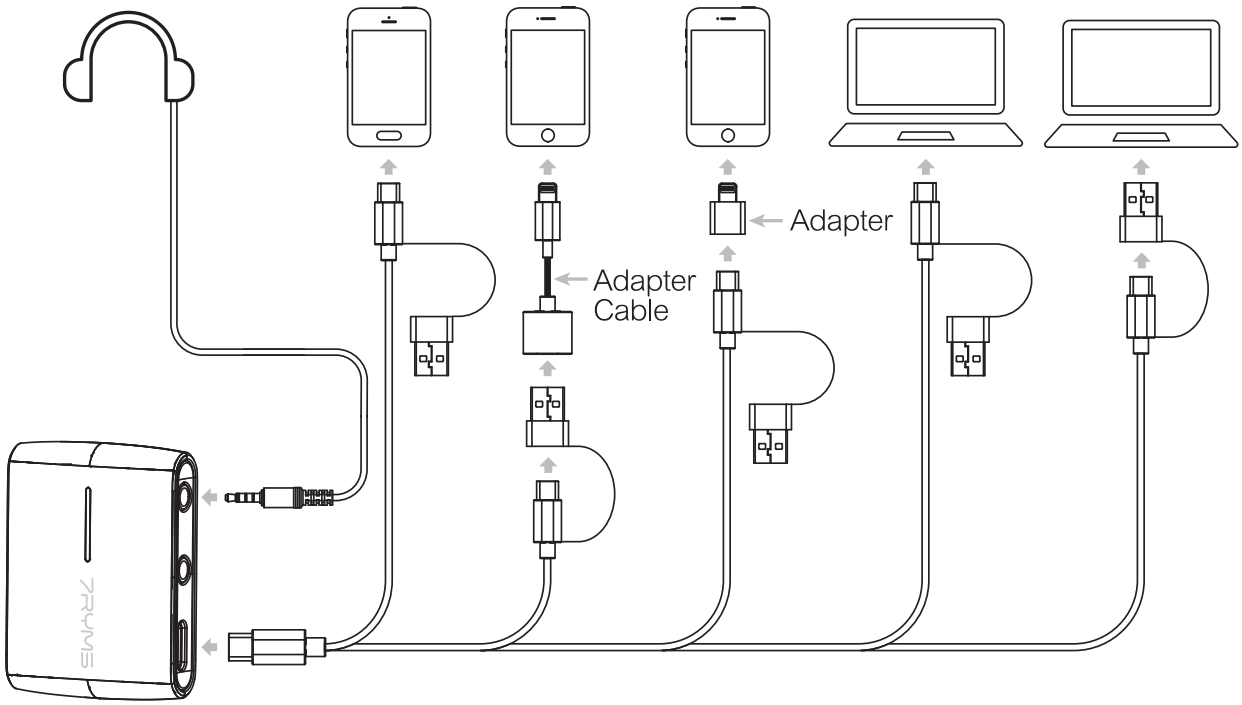

Specifications

Antenna	Ceramic Antenna
Transmitting Power	10dBm
Receiving Sensitivity	-97dBm
Microphone Sensitivity	-32dB±2dB
Polar Pattern	Omnidirectional
Frequency Response	80Hz ~ 20kHz
S/N	70dB SPL(A-weighted,as per IEC651)
Equivalent Noise	24dB SPL(A-weighted,as per IEC651)
Maximum SPL	110dB SPL(@ 1% THD)
Dynamic Range	86dB SPL(A-weighted,as per IEC651)
Sound Delay	<20ms
USB Specification	48kHz/24bit
Battery	TX:Li-ion Battery 95mAh 3.8V RX:Li-ion Battery 230mAh 3.7V Charging Case:Li-ion Battery 1400mAh 3.7V
Charging Time	TX: 2 Hours RX: 2 Hours Charging Case: 2 Hours
Standby Time	TX: 5 Hours RX: 5 Hours Charging Case: 1 Time
Net Weight	TX: 12g RX: 22g Charging Case(with accessories): 129g
Dimension	TX: 20.5X48.6X16mm RX: 36.1X49X17.3mm Charging Case: 136.5X63.2X31.8mm
Working Temperature	0℃ ~ 50℃
Storage Temperature	-20℃ ~ 60℃

The 7RYMS LOGO is a trademark which is registered and owned by
ConvoAssist LLC

FCC Statement

This device complies with part 15 of the FCC rules. Operation is subject to the following two conditions: (1) this device may not cause harmful interference, and (2) this device must accept any interference received, including interference that may cause undesired operation.

Changes or modifications not expressly approved by the party responsible for compliance could void the user's authority to operate the equipment.

NOTE: This equipment has been tested and found to comply with the limits for a Class B digital device, pursuant to part 15 of the FCC Rules. These limits are designed to provide reasonable protection against harmful interference in a residential installation. This equipment generates uses and can radiate radio frequency energy and, if not installed and used in accordance with the instructions, may cause harmful interference to radio communications. However, there is no guarantee that interference will not occur in a particular installation. If this equipment does cause harmful interference to radio or television reception, which can be determined by turning the equipment off and on, the user is encouraged to try to correct the interference by one or more of the following measures:

- Reorient or relocate the receiving antenna.
- Increase the separation between the equipment and receiver.
- Connect the equipment into an outlet on a circuit different from that to which the receiver is connected.
- Consult the dealer or an experienced radio/TV technician for help.

The device has been evaluated to meet general RF exposure requirement. The device can be used in portable exposure condition without restriction.