TEST REPORT

Product	:	Watch Buds
Trade mark	:	imoo
Model/Type reference	:	E2502AO
Serial Number	:	N/A
Report Number	:	EED32R81755102
FCC ID	:	2BSUAX02E
Date of Issue	:	Dec. 12, 2025
Test Standards	:	47 CFR Part 15 Subpart C
Test result	:	PASS

Prepared for:

DONGGUAN IMOO TECHNOLOGY LIMITED
Room 1102, Building 1, No. 28, Dongmen Middle Road, Chang'an Town, Dongguan City, Guangdong Province，523850，China

Prepared by:

Centre Testing International Group Co., Ltd.
Hongwei Industrial Park, Zone 70, Bao'an District, Shenzhen, Guangdong, China
TEL: +86-755-3368 3668
FAX: +86-755-3368 3385

Compiled by: Lucas Lu

Reviewed by: Keven Tan

Approved by: Aaron Ma

Date: Dec. 12, 2025

Check No.: 2527180925

1 Contents

Page

1 CONTENTS 2
2 TEST SUMMARY 3
3 GENERAL INFORMATION 4
3.1 CLIENT INFORMATION 4
3.2 GENERAL DESCRIPTION OF EUT 4
3.3 TEST CONFIGURATION 6
3.4 TEST ENVIRONMENT 7
3.5 DESCRIPTION OF SUPPORT UNITS 7
3.6 TEST LOCATION 7
3.7 MEASUREMENT UNCERTAINTY (95% CONFIDENCE LEVELS, K=2) 8
3.8 EQUIPMENT LIST 9
4 TEST RESULTS AND MEASUREMENT DATA 12
4.1 ANTENNA REQUIREMENT 12
4.2 AC POWER LINE CONDUCTED EMISSIONS 13
4.3 MAXIMUM CONDUCTED OUTPUT POWER 17
4.4 20DB EMISSION BANDWIDTH 18
4.5 CARRIER FREQUENCY SEPARATION 19
4.6 NUMBER OF HOPPING CHANNEL 20
4.7 TIME OF OCCUPANCY 21
4.8 BAND EDGE MEASUREMENTS 22
4.9 CONDUCTED SPURIOUS EMISSIONS 23
4.10 PSEUDORANDOM FREQUENCY HOPPING SEQUENCE 24
4.11 RADIATED SPURIOUS EMISSION & RESTRICTED BANDS 26
5 APPENDIX A 47
6 PHOTOGRAPHS OF TEST SETUP 48
7 PHOTOGRAPHS OF EUT CONSTRUCTIONAL DETAILS 50

2 Test Summary

Test Item	Test Requirement	Result
Antenna Requirement	47 CFR Part 15, Subpart C Section 15.203/15.247 (c)	PASS
AC Power Line Conducted Emission	47 CFR Part 15, Subpart C Section 15.207	PASS
Maximum Conducted Output Power	47 CFR Part 15, Subpart C Section 15.247 (b)(1)	PASS
20dB Emission Bandwidth	47 CFR Part 15, Subpart C Section 15.247 (a)(1)	PASS
Carrier Frequency Separation	47 CFR Part 15, Subpart C Section 15.247 (a)(1)	PASS
Number of Hopping Channels	47 CFR Part 15, Subpart C Section 15.247 (a)(1)	PASS
Time of Occupancy	47 CFR Part 15, Subpart C Section 15.247 (a)(1)	PASS
Pseudorandom Frequency Hopping Sequence	47 CFR Part 15, Subpart C Section 15.247(b)(4)	PASS
Band Edge Measurements	47 CFR Part 15, Subpart C Section 15.247(d)	PASS
Conducted Spurious Emissions	47 CFR Part 15, Subpart C Section 15.247(d)	PASS
Radiated Spurious emissions	47 CFR Part 15, Subpart C Section 15.205/15.209	PASS
Restricted bands around fundamental frequency	47 CFR Part 15, Subpart C Section 15.205/15.209	PASS

3 General Information

3.1 Client Information

Applicant:	DONGGUAN IMOO TECHNOLOGY LIMITED
Address of Applicant:	Room 1102, Building 1, No. 28, Dongmen Middle Road, Chang'an Town, Dongguan City, Guangdong Province，523850，China
Manufacturer:	DONGGUAN IMOO TECHNOLOGY LIMITED
Address of Manufacturer:	Room 1102, Building 1, No. 28, Dongmen Middle Road, Chang'an Town, Dongguan City, Guangdong Province，523850，China
Factory:	Dongguan Zack Electronic Technology Co.,Ltd.
Address of Factory:	Room 601，Building 9, No.11, Humen Section, Tai'an Road, Humen Town, Dongguan City, Guangdong Province China

3.2 General Description of EUT

Product Name:	Watch Buds	
Model No.:	E2502AO	
Test Model No.:	E2502AO	
Trade Mark:	imoo	
Product Type:	☐ Mobile ☒ Portable ☐ Fix Location	
Operation Frequency:	2402MHz-2480MHz	
Modulation Technique:	Frequency Hopping Spread Spectrum(FHSS)	
Modulation Type:	GFSK, π/4DQPSK, 8DPSK	
Number of Channel:	79	
Hopping Channel Type:	Adaptive Frequency Hopping systems	
Antenna Type:	FPC Antenna	
Antenna Gain:	-3.7dBi	
Power Supply:	Adapter:	DC 5V
	Battery:	DC 3.87V
Test Voltage:	DC 3.87V	
Sample Received Date:	Sep. 18, 2025	
Sample tested Date:	Sep. 18, 2025 to Oct. 14, 2025	

Operation Frequency each of channel							
Channel	Frequency (MHz)	Channel	Frequency (MHz)	Channel	Frequency (MHz)	Channel	Frequency (MHz)
0	2402	20	2422	40	2442	60	2462
1	2403	21	2423	41	2443	61	2463
2	2404	22	2424	42	2444	62	2464
3	2405	23	2425	43	2445	63	2465
4	2406	24	2426	44	2446	64	2466
5	2407	25	2427	45	2447	65	2467
6	2408	26	2428	46	2448	66	2468
7	2409	27	2429	47	2449	67	2469
8	2410	28	2430	48	2450	68	2470
9	2411	29	2431	49	2451	69	2471
10	2412	30	2432	50	2452	70	2472
11	2413	31	2433	51	2453	71	2473
12	2414	32	2434	52	2454	72	2474
13	2415	33	2435	53	2455	73	2475
14	2416	34	2436	54	2456	74	2476
15	2417	35	2437	55	2457	75	2477
16	2418	36	2438	56	2458	76	2478
17	2419	37	2439	57	2459	77	2479
18	2420	38	2440	58	2460	78	2480
19	2421	39	2441	59	2461		

Note:
In section 15.31(m), regards to the operating frequency range over 10 MHz, the Lowest frequency, the middle frequency, and the highest frequency of channel were selected to perform the test, and the selected channel see below:

Channel	Frequency(MHz)
The lowest channel (CH0)	2402
The middle channel (CH39)	2441
The highest channel (CH78)	2480

3.3 Test Configuration

EUT Test Software Settings:		
Test Software:	wvt_gui.exe	
EUT Power Grade:	Default (Power level is built-in set parameters and cannot be changed and selected)	
Use test software to set the lowest frequency, the middle frequency and the highest frequency keep transmitting of the EUT.		
Mode	Channel	Frequency(MHz)
DH5	CH0	2402
	CH39	2441
	CH78	2480
2DH5	CH0	2402
	CH39	2441
	CH78	2480
3DH5	CH0	2402
	CH39	2441
	CH78	2480

3.4 Test Environment

Operating Environment:	
Radiated Spurious Emissions:	
Temperature:	22~25.0 °C
Humidity:	50~55 % RH
Atmospheric Pressure:	1010mbar
Conducted Emissions:	
Temperature:	22~25.0 °C
Humidity:	50~55 % RH
Atmospheric Pressure:	1010mbar
RF Conducted:	
Temperature:	22~25.0 °C
Humidity:	50~55 % RH
Atmospheric Pressure:	1010mbar

3.5 Description of Support Units

The EUT has been tested independently.

3.6 Test Location

All tests were performed at:

Centre Testing International Group Co., Ltd
Hongwei Industrial Park, Zone 70, Bao'an District, Shenzhen, Guangdong, China
Telephone: +86 (0) 755 33683668 Fax:+86 (0) 755 33683385
No tests were sub-contracted.
FCC Designation No.: CN1164, Test Firm Registration No.: 260439

3.7 Measurement Uncertainty (95% confidence levels, k=2)

No.	Item	Measurement Uncertainty
1	Radio Frequency	7.9×10^{-8}
2	RF power, conducted	0.46dB (30MHz-1GHz)
		0.55dB (1GHz-40GHz)
3	Radiated Spurious emission test	3.3dB (9kHz-30MHz)
		4.3dB (30MHz-1GHz)
		4.5dB (1GHz-18GHz)
		3.4dB (18GHz-40GHz)
4	Conduction emission	3.5dB (9kHz-150kHz)
		3.1dB (150kHz-30MHz)
5	Temperature test	0.64°C
6	Humidity test	3.8%
7	DC power voltages	0.026%

3.8 Equipment List

RF test system					
Equipment	**Manufacturer**	**Model No.**	**Serial Number**	**Cal. Date (mm-dd-yyyy)**	**Cal. Due date (mm-dd-yyyy)**
Communication test set	R&S	CMW500	107929	06-16-2025	06-15-2026
Signal Generator	R&S	SMBV100A	1407.6004K02-262149-CV	09-02-2024 08-11-2025	09-01-2025 08-10-2026
Spectrum Analyzer	R&S	FSV40	101200	07-16-2025	07-15-2026
RF control unit(power unit)	MWRF-test	MW100-RFCB	MW220620CTI-42	06-16-2025	06-15-2026
High-low temperature test chamber	Dong Guang Qin Zhuo	LK-80GA	QZ20150611879	11-30-2024	11-29-2025
Temperature/ Humidity Indicator	biaozhi	HM10	1804186	05-26-2025	05-25-2026
BT&WI-FI Automatic test software	MWRF-test	MTS 8310	V2.0.0.0	---	---
Spectrum Analyzer	R&S	FSV3044	101509	02-14-2025	02-13-2026

Conducted disturbance Test					
Equipment	**Manufacturer**	**Model No.**	**Serial Number**	**Cal. date (mm-dd-yyyy)**	**Cal. Due date (mm-dd-yyyy)**
Receiver	R&S	ESCI	100435	04-08-2025	04-07-2026
Temperature/ Humidity Indicator	Defu	TH128	/	03-31-2025	03-30-2026
LISN	R&S	ENV216	100098	09-19-2024 09-13-2025	09-18-2025 09-12-2026
Barometer	changchun	DYM3	1188	---	---
Test software	Fara	EZ-EMC	EMC-CON 3A1.1	---	---
Capacitive voltage probe	Schwarzbeck	CVP 9222C	00124	06-07-2025	06-06-2026

ISN	TESEQ	ISN T800	30297	12-05-2024	12-04-2025

3M Semi-anechoic Chamber (2)- Radiated disturbance Test					
Equipment	**Manufacturer**	**Model No.**	**Serial Number**	**Cal. date (mm-dd-yyyy)**	**Cal. Due date (mm-dd-yyyy)**
3M Chamber & Accessory Equipment	TDK	SAC-3	---	01/13/2024	01/12/2027
Receiver	R&S	ESCI7	100938-003	09/07/2024 09/03/2025	09/06/2025 09/02/2026
Spectrum Analyzer	R&S	FSV40	101200	08/11/2025	08/10/2026
TRILOG Broadband Antenna	schwarzbeck	VULB 9163	9163-618	05/14/2025	05/13/2026
Loop Antenna	Schwarzbeck	FMZB 1519B	1519B-076	04/07/2025	04/06/2026
Microwave Preamplifier	Tonscend	EMC051845SE	980380	12/05/2024	12/04/2025
Horn Antenna	A.H.SYSTEMS	SAS-574	374	07/02/2023	07/01/2026
Horn Antenna	ETS-LINGREN	BBHA 9120D	9120D-1869	04/07/2025	04/06/2026
Preamplifier	Agilent	11909A	12-1	03/03/2025	03/02/2026
Preamplifier	CD	PAP-1840-60	6041.6042	05/26/2025	05/25/2026
Test software	Fara	EZ-EMC	EMEC-3A1-Pre	---	---
Cable line	Fulai(7M)	SF106	5219/6A	01/13/2024	01/12/2027
Cable line	Fulai(6M)	SF106	5220/6A	01/13/2024	01/12/2027
Cable line	Fulai(3M)	SF106	5216/6A	01/13/2024	01/12/2027
Cable line	Fulai(3M)	SF106	5217/6A	01/13/2024	01/12/2027

3M full-anechoic Chamber					
Equipment	**Manufacturer**	**Model No.**	**Serial Number**	**Cal. Date (mm-dd-yyyy)**	**Cal. Due date (mm-dd-yyyy)**
Fully Anechoic Chamber	TDK	FAC-3	---	01-09-2024	01-08-2027
Receiver	Keysight	N9038A	MY57290136	01-04-2025	01-03-2026
Spectrum Analyzer	Keysight	N9020B	MY57111112	01-14-2025	01-13-2026
Spectrum Analyzer	Keysight	N9030B	MY57140871	01-14-2025	01-13-2026
TRILOG Broadband Antenna	Schwarzbeck	VULB 9163	9163-1148	04-12-2025	04-11-2026
Horn Antenna	Schwarzbeck	BBHA 9170	9170-832	04-12-2025	04-11-2026
Horn Antenna	ETS-LINDGREN	3117	57407	07-03-2024 06-29-2025	07-02-2025 06-28-2026
Preamplifier	EMCI	EMC001330	980563	03-03-2025	03-02-2026
Preamplifier	Tonscend	TAP-011858	AP21B806112	07-18-2024 07-07-2025	07-17-2025 07-06-2026
Preamplifier	Tonscend	EMC051845SE	980380	12-05-2024	12-04-2025
Communication test set	R&S	CMW500	102898	01-04-2025	01-03-2026
Temperature/ Humidity Indicator	biaozhi	GM1360	EE1186631	03-31-2025	03-30-2026
RSE Automatic test software	JS Tonscend	JS36-RSE	V4.0.0.0	---	---
Cable line	Times	SFT205-NMSM-2.50M	394812-0001	01-09-2024	01-08-2027
Cable line	Times	SFT205-NMSM-2.50M	394812-0002	01-09-2024	01-08-2027
Cable line	Times	SFT205-NMSM-2.50M	394812-0003	01-09-2024	01-08-2027
Cable line	Times	SFT205-NMSM-2.50M	393495-0001	01-09-2024	01-08-2027
Cable line	Times	EMC104-NMNM-1000	SN160710	01-09-2024	01-08-2027
Cable line	Times	SFT205-NMSM-3.00M	394813-0001	01-09-2024	01-08-2027
Cable line	Times	SFT205-NMNM-1.50M	381964-0001	01-09-2024	01-08-2027
Cable line	Times	SFT205-NMSM-7.00M	394815-0001	01-09-2024	01-08-2027
Cable line	Times	HF160-KMKM-3.00M	393493-0001	01-09-2024	01-08-2027

4 Test results and Measurement Data

4.1 Antenna Requirement

Standard requirement:	47 CFR Part 15C Section 15.203 /247(c)
15.203 requirement: An intentional radiator shall be designed to ensure that no antenna other than that furnished by the responsible party shall be used with the device. The use of a permanently attached antenna or of an antenna that uses a unique coupling to the intentional radiator, the manufacturer may design the unit so that a broken antenna can be replaced by the user, but the use of a standard antenna jack or electrical connector is prohibited. 15.247(b) (4) requirement: The conducted output power limit specified in paragraph (b) of this section is based on the use of antennas with directional gains that do not exceed 6 dBi. Except as shown in paragraph (c) of this section, if transmitting antennas of directional gain greater than 6 dBi are used, the conducted output power from the intentional radiator shall be reduced below the stated values in paragraphs (b)(1), (b)(2), and (b)(3) of this section, as appropriate, by the amount in dB that the directional gain of the antenna exceeds 6 dBi.	
EUT Antenna:	Please see Internal photos
The antenna is FPC Antenna. The best case gain of the antenna is -3.7dBi.	

4.2 AC Power Line Conducted Emissions

Test Requirement:	47 CFR Part 15C Section 15.207
Test Method:	ANSI C63.10: 2020
Test Frequency Range:	150kHz to 30MHz
Receiver setup:	RBW=9 kHz, VBW=30 kHz, Sweep time=auto
Limit:	

Frequency range (MHz)	Limit (dBuV)	
	Quasi-peak	Average
0.15-0.5	66 to 56*	56 to 46*
0.5-5	56	46
5-30	60	50

* Decreases with the logarithm of the frequency.

Test Setup:

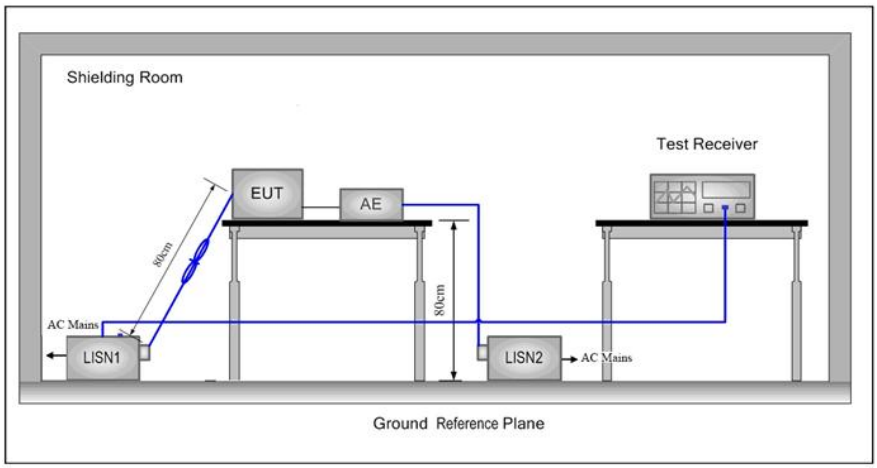

Test Procedure:

1) The mains terminal disturbance voltage test was conducted in a shielded room.
2) The EUT was connected to AC power source through a LISN 1 (Line Impedance Stabilization Network) which provides a 50Ω/50μH + 5Ω linear impedance. The power cables of all other units of the EUT were connected to a second LISN 2, which was bonded to the ground reference plane in the same way as the LISN 1 for the unit being measured. A multiple socket outlet strip was used to connect multiple power cables to a single LISN provided the rating of the LISN was not exceeded.
3) The tabletop EUT was placed upon a non-metallic table 0.8m above the ground reference plane. And for floor-standing arrangement, the EUT was placed on the horizontal ground reference plane,
4) The test was performed with a vertical ground reference plane. The rear of the EUT shall be 0.4 m from the vertical ground reference plane. The vertical ground reference plane was bonded to the horizontal ground reference plane. The LISN 1 was placed 0.8 m from the boundary of the unit under test and bonded to a ground reference plane for LISNs mounted on top of the ground reference plane. This distance was between the closest points of the LISN 1 and the EUT. All other units of the EUT and associated equipment was at least 0.8 m from the LISN 2.

	5) In order to find the maximum emission, the relative positions of equipment and all of the interface cables must be changed according to ANSI C63.10: 2020 on conducted measurement.
Exploratory Test Mode:	Non-hopping transmitting mode with all kind of modulation and all kind of data type at the lowest, middle, high channel.
Final Test Mode:	Through Pre-scan, find the DH5 of data type and GFSK modulation at the lowest channel is the worst case. Only the worst case is recorded in the report.
Test Results:	Pass

Measurement Data

Live line:

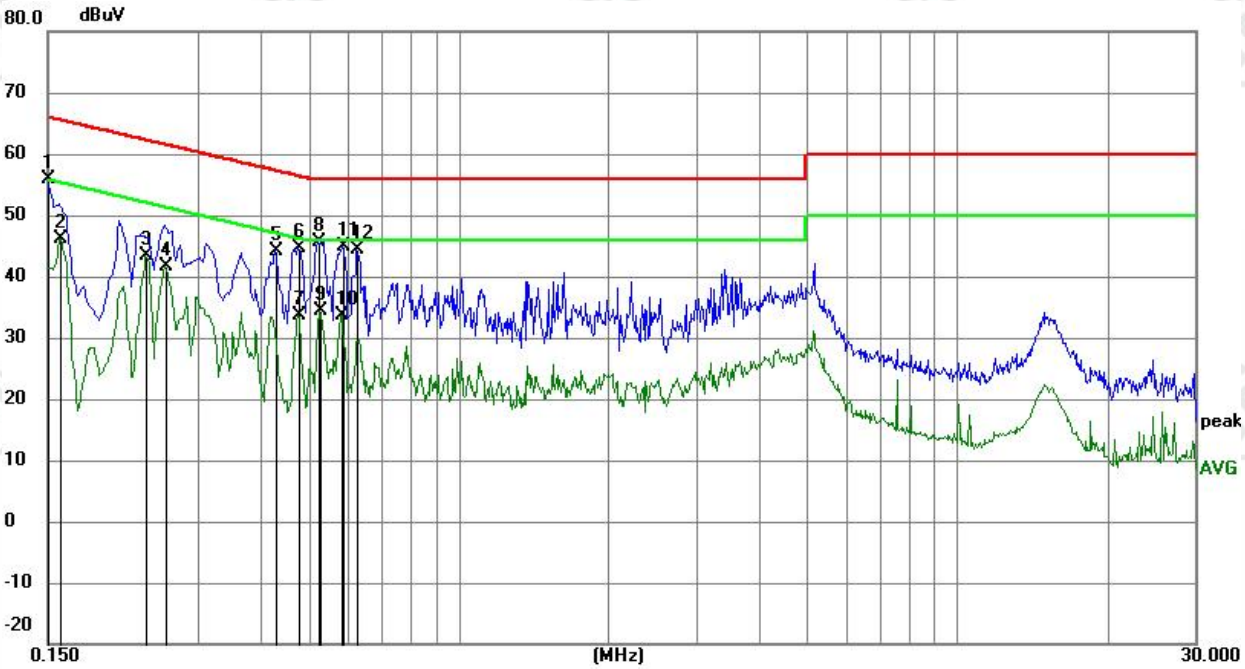

No.	Mk.	Freq.	Reading Level	Correct Factor	Measure-ment	Limit	Margin		
		MHz	dBuV	dB	dBuV	dBuV	dB	Detector	Comment
1		0.1500	45.67	10.28	55.95	66.00	-10.05	QP	
2		0.1590	35.83	10.27	46.10	55.52	-9.42	AVG	
3	*	0.2355	33.15	10.18	43.33	52.25	-8.92	AVG	
4		0.2580	31.45	10.16	41.61	51.50	-9.89	AVG	
5		0.4290	34.16	10.09	44.25	57.27	-13.02	QP	
6		0.4785	34.56	10.08	44.64	56.37	-11.73	QP	
7		0.4785	23.53	10.08	33.61	46.37	-12.76	AVG	
8		0.5235	35.52	10.08	45.60	56.00	-10.40	QP	
9		0.5280	24.20	10.09	34.29	46.00	-11.71	AVG	
10		0.5820	23.62	10.10	33.72	46.00	-12.28	AVG	
11		0.5865	34.79	10.10	44.89	56.00	-11.11	QP	
12		0.6270	34.36	10.11	44.47	56.00	-11.53	QP	

Remark:

1. The following Quasi-Peak and Average measurements were performed on the EUT:
2. Final Test Level =Receiver Reading + LISN Factor + Cable Loss.
3. Margin=Measurement-Limit.
4. Measurement=Reading Level+Correct Factor.
5. In the test results, an asterisk (*) indicates Maximum Data, a cross (X) indicates over Limit.
6. If the Peak value under Average limit, the Average value is not recorded in the report.

Neutral line:

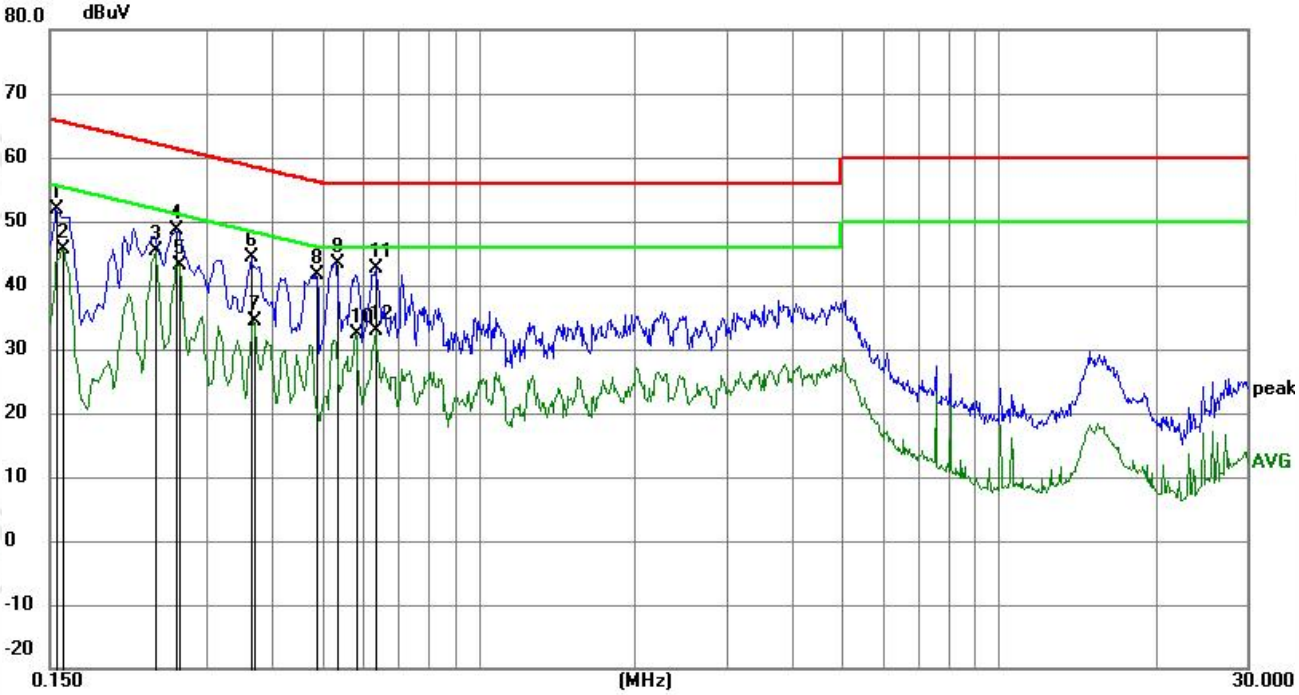

No.	Mk.	Freq.	Reading Level	Correct Factor	Measure-ment	Limit	Margin		
		MHz	dBuV	dB	dBuV	dBuV	dB	Detector	Comment
1		0.1545	41.61	10.28	51.89	65.75	-13.86	QP	
2		0.1590	35.34	10.27	45.61	55.52	-9.91	AVG	
3	*	0.2400	35.16	10.18	45.34	52.10	-6.76	AVG	
4		0.2625	38.51	10.16	48.67	61.35	-12.68	QP	
5		0.2670	33.05	10.16	43.21	51.21	-8.00	AVG	
6		0.3660	34.30	10.10	44.40	58.59	-14.19	QP	
7		0.3704	24.34	10.10	34.44	48.49	-14.05	AVG	
8		0.4875	31.48	10.08	41.56	56.21	-14.65	QP	
9		0.5325	33.25	10.09	43.34	56.00	-12.66	QP	
10		0.5820	22.30	10.10	32.40	46.00	-13.60	AVG	
11		0.6360	32.62	10.11	42.73	56.00	-13.27	QP	
12		0.6360	22.70	10.11	32.81	46.00	-13.19	AVG	

Remark:

1. The following Quasi-Peak and Average measurements were performed on the EUT:
2. Final Test Level =Receiver Reading + LISN Factor + Cable Loss.
3. Margin=Measurement-Limit.
4. Measurement=Reading Level+Correct Factor.
5. In the test results, an asterisk (*) indicates Maximum Data, a cross (X) indicates over Limit.
6. If the Peak value under Average limit, the Average value is not recorded in the report.

4.3 Maximum Conducted Output Power

Test Requirement:	47 CFR Part 15C Section 15.247 (b)(1)
Test Method:	ANSI C63.10: 2020
Test Setup:	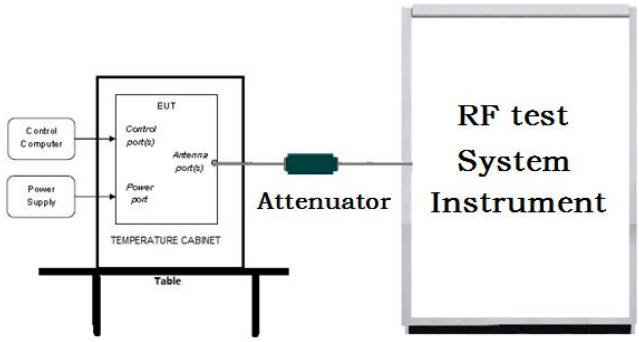 Remark: Offset=Cable loss+ attenuation factor.
Test Procedure:	Use the following spectrum analyzer settings: Span = approximately 5 times the 20 dB bandwidth, centered on a hopping channel RBW > the 20 dB bandwidth of the emission being measured VBW ≥ RBW Sweep = auto Detector function = peak Trace = max hold Allow the trace to stabilize. Use the marker-to-peak function to set the marker to the peak of the emission.
Limit:	21dBm
Exploratory Test Mode:	Non-hopping transmitting with all kind of modulation and all kind of data type
Final Test Mode:	Through Pre-scan, find the DH5 of data type is the worst case of GFSK modulation type, 2-DH5 of data type is the worst case of π/4DQPSK modulation type, 3-DH5 of data type is the worst case of 8DPSK modulation type.
Test Results:	Refer to Appendix A

4.4 20dB Emission Bandwidth

Test Requirement:	47 CFR Part 15C Section 15.247 (a)(1)
Test Method:	ANSI C63.10: 2020
Test Setup:	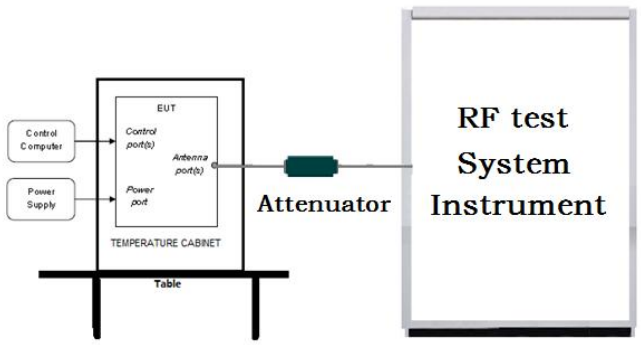 Remark: Offset=Cable loss+ attenuation factor.
Test Procedure:	1. The RF output of EUT was connected to the spectrum analyzer by RF cable and attenuator. The path loss was compensated to the results for each measurement. 2. Set to the maximum power setting and enable the EUT transmit continuously. 3. Use the following spectrum analyzer settings for 20dB Bandwidth measurement. Span = approximately 2 to 5 times the 20 dB bandwidth, centered on a hopping channel; 1%≤RBW ≤5% of the 20 dB bandwidth; VBW≥3RBW; Sweep = auto; Detector function = peak; Trace = max hold. 4. Measure and record the results in the test report.
Limit:	NA
Exploratory Test Mode:	Non-hopping transmitting with all kind of modulation and all kind of data type
Final Test Mode:	Through Pre-scan, find the DH5 of data type is the worst case of GFSK modulation type, 2-DH5 of data type is the worst case of π/4DQPSK modulation type, 3-DH5 of data type is the worst case of 8DPSK modulation type.
Test Results:	Refer to Appendix A

4.5 Carrier Frequency Separation

Test Requirement:	47 CFR Part 15C Section 15.247 (a)(1)
Test Method:	ANSI C63.10: 2020
Test Setup:	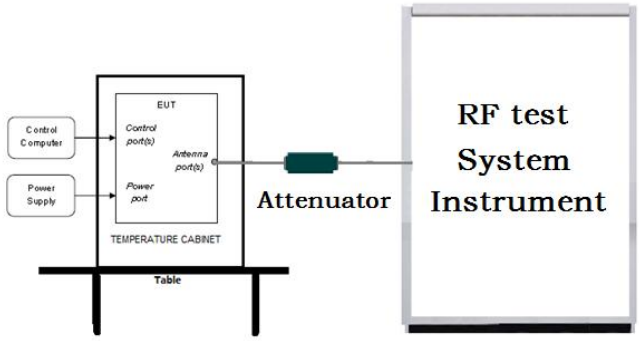 Remark: Offset=Cable loss+ attenuation factor.
Test Procedure:	1. The RF output of EUT was connected to the spectrum analyzer by RF cable and attenuator. The path loss was compensated to the results for each measurement. 2. Set to the maximum power setting and enable the EUT transmit continuously. 3. Enable the EUT hopping function. 4. Use the following spectrum analyzer settings: Span = wide enough to capture the peaks of two adjacent channels; RBW is set to approximately 30% of the channel spacing, adjust as necessary to best identify the center of each individual channel; VBW≥RBW; Sweep = auto; Detector function = peak; Trace = max hold. 5. Use the marker-delta function to determine the separation between the peaks of the adjacent channels. Record the value in report.
Limit:	Frequency hopping systems operating in the 2400-2483.5 MHz band may have hopping channel carrier frequencies that are separated by 25 kHz or two-thirds of the 20 dB bandwidth of the hopping channel, whichever is greater.
Exploratory Test Mode:	Hopping transmitting with all kind of modulation and all kind of data type
Final Test Mode:	Through Pre-scan, find the DH5 of data type is the worst case of GFSK modulation type, 2-DH5 of data type is the worst case of π/4DQPSK modulation type, 3-DH5 of data type is the worst case of 8DPSK modulation type.
Test Results:	Refer to Appendix A

4.6 Number of Hopping Channel

Test Requirement:	47 CFR Part 15C Section 15.247 (a)(1)
Test Method:	ANSI C63.10: 2020
Test Setup:	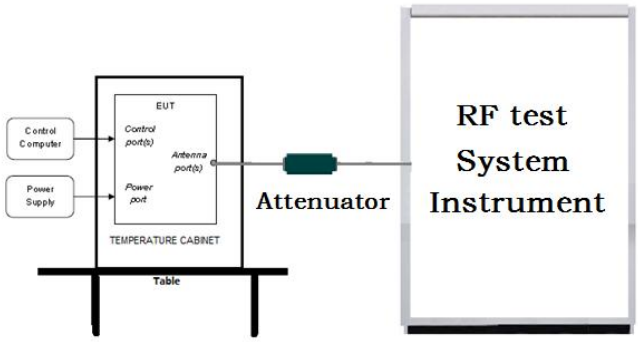 Remark: Offset=Cable loss+ attenuation factor.
Test Procedure:	1. The RF output of EUT was connected to the spectrum analyzer by RF cable and attenuator. The path loss was compensated to the results for each measurement. 2. Set to the maximum power setting and enable the EUT transmit continuously. 3. Enable the EUT hopping function. 4. Use the following spectrum analyzer settings: Span = the frequency band of operation; set the RBW to less than 30% of the channel spacing or the 20 dB bandwidth, whichever is smaller; VBW≥RBW; Sweep= auto; Detector function = peak; Trace = max hold. 5. The number of hopping frequency used is defined as the number of total channel. 6. Record the measurement data in report.
Limit:	Frequency hopping systems in the 2400-2483.5 MHz band shall use at least 15 channels.
Test Mode:	Hopping transmitting with all kind of modulation
Test Results:	Refer to Appendix A

4.7 Time of Occupancy

Test Requirement:	47 CFR Part 15C Section 15.247 (a)(1)
Test Method:	ANSI C63.10: 2020
Test Setup:	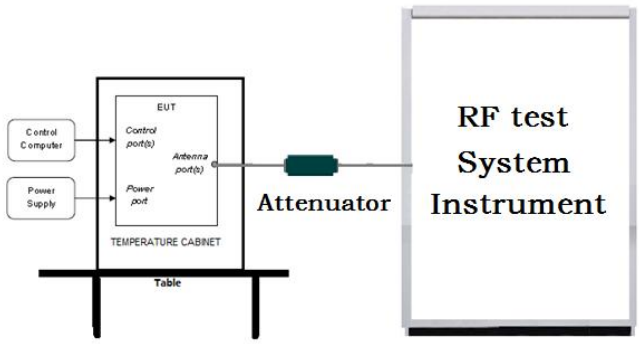 Remark: Offset=Cable loss+ attenuation factor.
Test Procedure:	1. The RF output of EUT was connected to the spectrum analyzer by RF cable and attenuator. The path loss was compensated to the results for each measurement. 2. Set to the maximum power setting and enable the EUT transmit continuously. 3. Enable the EUT hopping function. 4. Use the following spectrum analyzer settings: Span = zero span, centered on a hopping channel; RBW shall be ≤ channel spacing and where possible RBW should be set >> 1 / T, where T is the expected dwell time per channel; VBW≥RBW; Sweep = as necessary to capture the entire dwell time per hopping channel; Detector function = peak; Trace = max hold. 5. Measure and record the results in the test report.
Limit:	The average time of occupancy on any channel shall not be greater than 0.4 seconds within a period of 0.4 seconds multiplied by the number of hopping channels employed.
Test Mode:	Hopping transmitting with all kind of modulation and all kind of data type.
Test Results:	Refer to Appendix A

4.8 Band edge Measurements

Test Requirement:	47 CFR Part 15C Section 15.247 (d)
Test Method:	ANSI C63.10: 2020
Test Setup:	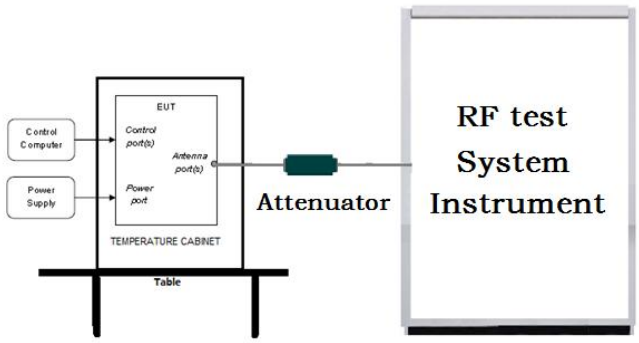 Remark: Offset=Cable loss+ attenuation factor.
Test Procedure:	1. Set to the maximum power setting and enable the EUT transmit continuously. 2. Set RBW = 100 kHz, VBW = 300 kHz (≥RBW). Band edge emissions must be at least 20 dB down from the highest emission level within the authorized band as measured with a 100kHz RBW. The attenuation shall be 30 dB instead of 20 dB when RMS conducted output power procedure is used. 3. Enable hopping function of the EUT and then repeat step 2 and 3. 4. Measure and record the results in the test report.
Limit:	In any 100 kHz bandwidth outside the frequency band in which the spread spectrum intentional radiator is operating, the radio frequency power that is produced by the intentional radiator shall be at least 20 dB below that in the 100 kHz bandwidth within the band that contains the highest level of the desired power, based on either an RF conducted or a radiated measurement.
Exploratory Test Mode:	Hopping and Non-hopping transmitting with all kind of modulation and all kind of data type
Final Test Mode:	Through Pre-scan, find the DH5 of data type is the worst case of GFSK modulation type, 2-DH5 of data type is the worst case of π/4DQPSK modulation type, 3-DH5 of data type is the worst case of 8DPSK modulation type.
Test Results:	Refer to Appendix A

4.9 Conducted Spurious Emissions

Test Requirement:	47 CFR Part 15C Section 15.247 (d)
Test Method:	ANSI C63.10: 2020
Test Setup:	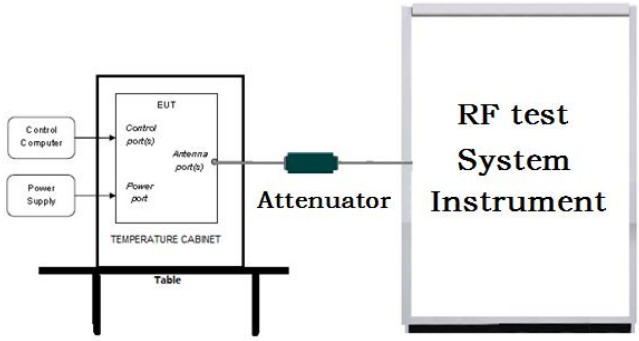 Remark: Offset=Cable loss+ attenuation factor.
Test Procedure:	1. The RF output of EUT was connected to the spectrum analyzer by RF cable and attenuator. The path loss was compensated to the results for each measurement. 2. Set to the maximum power setting and enable the EUT transmit continuously. 3. Set RBW = 100 kHz, VBW = 300kHz, scan up through 10th harmonic. All harmonics / spurs must be at least 20 dB down from the highest emission level within the authorized band as measured with a 100kHz RBW. 4. Measure and record the results in the test report. 5. The RF fundamental frequency should be excluded against the limit line in the operating frequency band.
Limit:	In any 100 kHz bandwidth outside the frequency band in which the spread spectrum intentional radiator is operating, the radio frequency power that is produced by the intentional radiator shall be at least 20 dB below that in the 100 kHz bandwidth within the band that contains the highest level of the desired power, based on either an RF conducted or a radiated measurement.
Exploratory Test Mode:	Non-hopping transmitting with all kind of modulation and all kind of data type
Final Test Mode:	Through Pre-scan, find the DH5 of data type is the worst case of GFSK modulation type, 2-DH5 of data type is the worst case of π/4DQPSK modulation type, 3-DH5 of data type is the worst case of 8DPSK modulation type.
Test Results:	Refer to Appendix A

4.10 Pseudorandom Frequency Hopping Sequence

Test Requirement:	47 CFR Part 15C Section 15.247 (a)(1), (h) requirement:

The system shall hop to channel frequencies that are selected at the system hopping rate from a Pseudorandom ordered list of hopping frequencies. Each frequency must be used equally on the average by each transmitter. The system receivers shall have input bandwidths that match the hopping channel bandwidths of their corresponding transmitters and shall shift frequencies in synchronization with the transmitted signals.

Frequency hopping spread spectrum systems are not required to employ all available hopping channels during each transmission. However, the system, consisting of both the transmitter and the receiver, must be designed to comply with all of the regulations in this section should the transmitter be presented with a continuous data (or information) stream. In addition, a system employing short transmission bursts must comply with the definition of a frequency hopping system and must distribute its transmissions over the minimum number of hopping channels specified in this section.

The incorporation of intelligence within a frequency hopping spread spectrum system that permits the system to recognize other users within the spectrum band so that it individually and independently chooses and adapts its hopsets to avoid hopping on occupied channels is permitted. The coordination of frequency hopping systems in any other manner for the express purpose of avoiding the simultaneous occupancy of individual hopping frequencies by multiple transmitters is not permitted.

Compliance for section 15.247(a)(1)

According to Bluetooth Core Specification, the pseudorandom sequence may be generated in a nine-stage shift register whose 5th and 9th stage
outputs are added in a modulo-two addition stage. And the result is fed back to the input of the first stage. The sequence begins with the first ONE of 9 consecutive ONEs; i.e. the shift register is initialized with nine ones.

- Number of shift register stages: 9
- Length of pseudo-random sequence: 2^9 -1 = 511 bits
- Longest sequence of zeros: 8 (non-inverted signal)

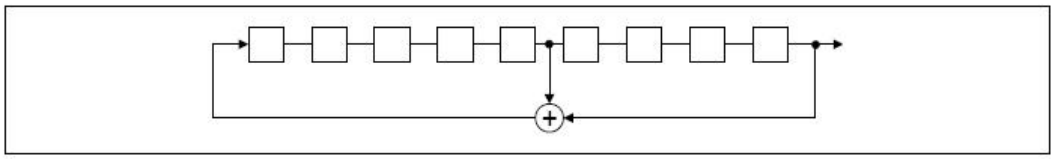

Linear Feedback Shift Register for Generation of the PRBS sequence

An example of Pseudorandom Frequency Hopping Sequence as follow:

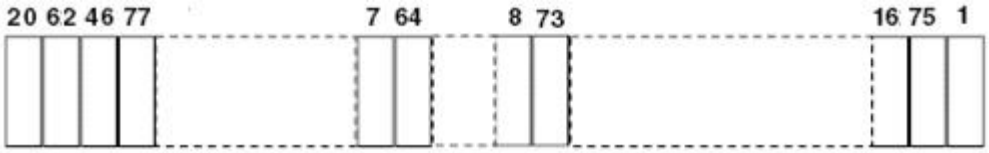

Each frequency used equally on the average by each transmitter.

According to Bluetooth Core Specification, Bluetooth receivers are designed to have input and IF bandwidths that match the hopping channel bandwidths of any Bluetooth transmitters and shift frequencies in synchronization with the transmitted signals.

Compliance for section 15.247(g)

According to Bluetooth Core Specification, the Bluetooth system transmits the packet with the

pseudorandom hopping frequency with a continuous data and the short burst transmission from the Bluetooth system is also transmitted under the frequency hopping system with the pseudorandom hopping frequency system.
Compliance for section 15.247(h)
According to Bluetooth Core specification, the Bluetooth system incorporates with an adaptive system to detect other user within the spectrum band so that it individually and independently to avoid hopping on the occupied channels. According to the Bluetooth Core specification, the Bluetooth system is designed not have the ability to coordinated with other FHSS System in an effort to avoid the simultaneous occupancy of individual hopping frequencies by multiple transmitter.

4.11 Radiated Spurious Emission & Restricted bands

Test Requirement:	47 CFR Part 15C Section 15.209 and 15.205
Test Method:	ANSI C63.10: 2020
Test Site:	Measurement Distance: 3m (Semi-Anechoic Chamber)
Receiver Setup:	

Frequency	Detector	RBW	VBW	Remark
0.009MHz-0.090MHz	Peak	10kHz	30kHz	Peak
0.009MHz-0.090MHz	Average	10kHz	30kHz	Average
0.090MHz-0.110MHz	Quasi-peak	10kHz	30kHz	Quasi-peak
0.110MHz-0.490MHz	Peak	10kHz	30kHz	Peak
0.110MHz-0.490MHz	Average	10kHz	30kHz	Average
0.490MHz -30MHz	Quasi-peak	10kHz	30kHz	Quasi-peak
30MHz-1GHz	Peak	100 kHz	300kHz	Peak
Above 1GHz	Peak	1MHz	3MHz	Peak
	Peak	1MHz	10kHz	Average

Limit:

Frequency	Field strength (microvolt/meter)	Limit (dBuV/m)	Remark	Measurement distance (m)
0.009MHz-0.490MHz	2400/F(kHz)	-	-	300
0.490MHz-1.705MHz	24000/F(kHz)	-	-	30
1.705MHz-30MHz	30	-	-	30
30MHz-88MHz	100	40.0	Quasi-peak	3
88MHz-216MHz	150	43.5	Quasi-peak	3
216MHz-960MHz	200	46.0	Quasi-peak	3
960MHz-1GHz	500	54.0	Quasi-peak	3
Above 1GHz	500	54.0	Average	3

Note: 15.35(b), Unless otherwise specified, the limit on peak radio frequency emissions is 20dB above the maximum permitted average emission limit applicable to the equipment under test. This peak limit applies to the total peak emission level radiated by the device.

Test Setup:	

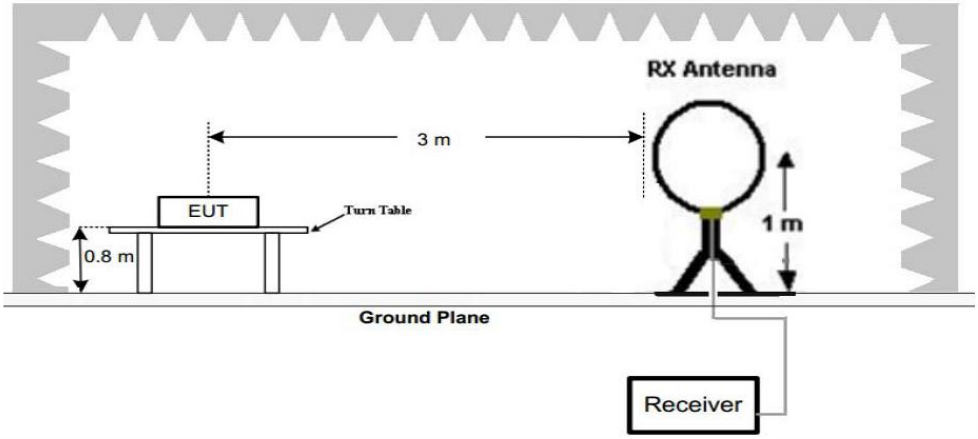

Figure 1. Below 30MHz

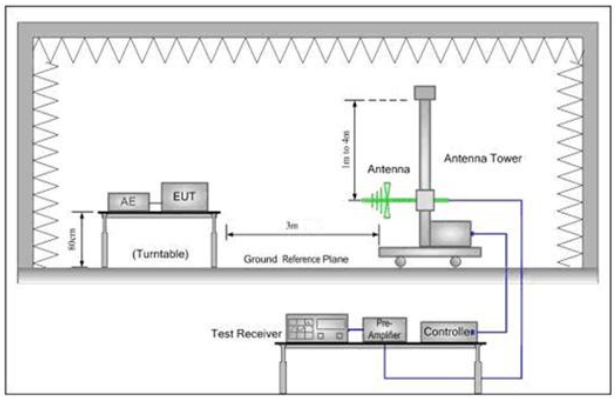

Figure 2. 30MHz to 1GHz

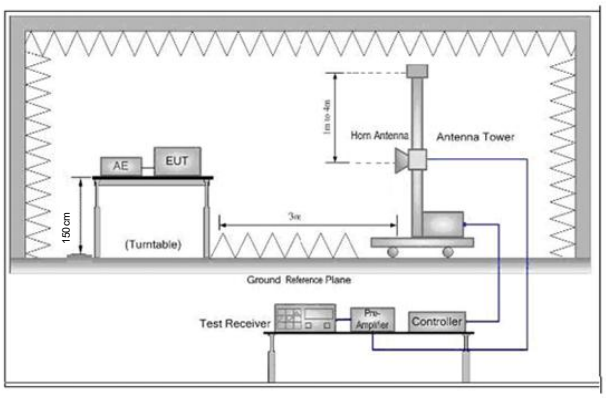

Figure 3. Above 1 GHz

Test Procedure:	a. 1) Below 1G: The EUT was placed on the top of a rotating table 0.8 meters above the ground at a 3 meter semi-anechoic camber. The table was rotated 360 degrees to determine the position of the highest radiation. 2) Above 1G: The EUT was placed on the top of a rotating table 1.5 meters above the ground at a 3 meter semi-anechoic camber. The table was rotated 360 degrees to determine the position of the highest radiation. Note: For the radiated emission test above 1GHz: Place the measurement antenna away from each area of the EUT determined to be a source of emissions at the specified measurement distance, while keeping the measurement antenna aimed at the source of emissions at each frequency of significant emissions, with polarization oriented for maximum response. The measurement antenna may have to be higher or lower than the EUT, depending on the radiation pattern of the emission and staying aimed at the emission source for receiving the maximum signal. The final measurement antenna elevation shall be that which maximizes the emissions. The measurement antenna elevation for maximum emissions shall be restricted to a range of heights of from 1 m to 4 m above the ground or reference ground plane. b. The EUT was set 3 meters away from the interference-receiving antenna, which was mounted on the top of a variable-height antenna tower. c. The antenna height is varied from one meter to four meters above the ground to determine the maximum value of the field strength. Both

	horizontal and vertical polarizations of the antenna are set to make the measurement. d. For each suspected emission, the EUT was arranged to its worst case and then the antenna was tuned to heights from 1 meter to 4 meters (for the test frequency of below 30MHz, the antenna was tuned to heights 1 meter) and the rotatable table was turned from 0 degrees to 360 degrees to find the maximum reading. e. The test-receiver system was set to Peak Detect Function and Specified Bandwidth with Maximum Hold Mode. f. If the emission level of the EUT in peak mode was 10dB lower than the limit specified, then testing could be stopped and the peak values of the EUT would be reported. Otherwise the emissions that did not have 10dB margin would be re-tested one by one using peak, quasi-peak or average method as specified and then reported in a data sheet. g. Test the EUT in the lowest channel (2402MHz),the middle channel (2441MHz),the Highest channel (2480MHz) h. The radiation measurements are performed in X, Y, Z axis positioning for Transmitting mode, and found the X axis positioning which it is the worst case. i. Repeat above procedures until all frequencies measured was complete.
Exploratory Test Mode:	Non-hopping transmitting mode with all kind of modulation and all kind of data type
Final Test Mode:	Through Pre-scan, find the DH5 of data type and GFSK modulation is the worst case. Pretest the EUT at Transmitting mode, For below 1GHz part, through pre-scan, the worst case is the lowest channel. Only the worst case is recorded in the report.
Test Results:	Pass

Radiated Spurious Emission below 1GHz:

During the test, the Radiates Emission from 30MHz to 1GHz was performed in all modes, only the worst case lowest channel of DH5 for GFSK was recorded in the report.

Test Graph

Horizontal:

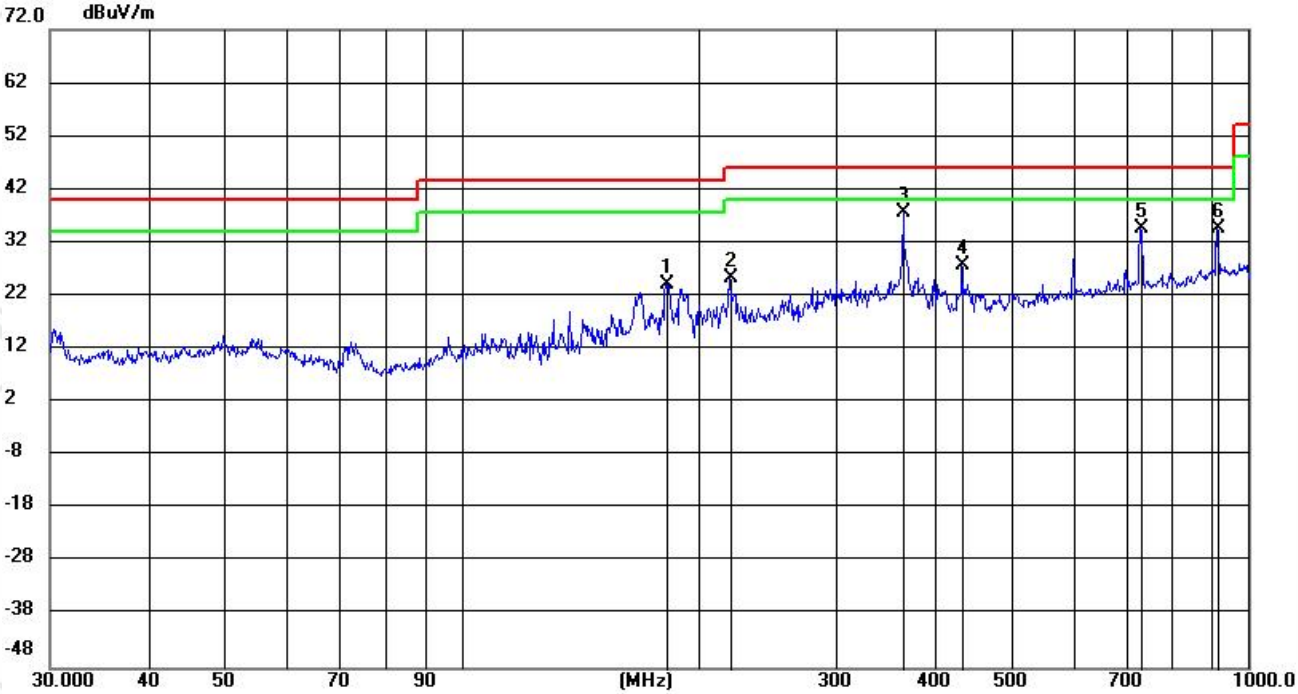

No.	Mk.	Freq.	Reading Level	Correct Factor	Measure-ment	Limit	Margin		Antenna Height	Table Degree	
		MHz	dBuV	dB/m	dBuV/m	dBuV/m	dB	Detector	cm	degree	Comment
1		182.5592	12.70	11.38	24.08	43.50	-19.42	QP	100	143	
2		219.2674	12.23	13.19	25.42	46.00	-20.58	QP	100	109	
3	*	365.3468	19.33	18.40	37.73	46.00	-8.27	QP	100	178	
4		433.9129	7.90	19.77	27.67	46.00	-18.33	QP	100	342	
5		730.2539	10.28	24.26	34.54	46.00	-11.46	QP	100	204	
6		914.3036	7.57	27.09	34.66	46.00	-11.34	QP	100	117	

Remark:

1. Margin=Measurement(Level)-Limit.
2. Measurement(Level)=Reading Level+Correct Factor.
3. In the test results, an asterisk (*) indicates Maximum Data, a cross (X) indicates over Limit, an exclamation mark (!) indicates over -6dB margin Limit.

Vertical:

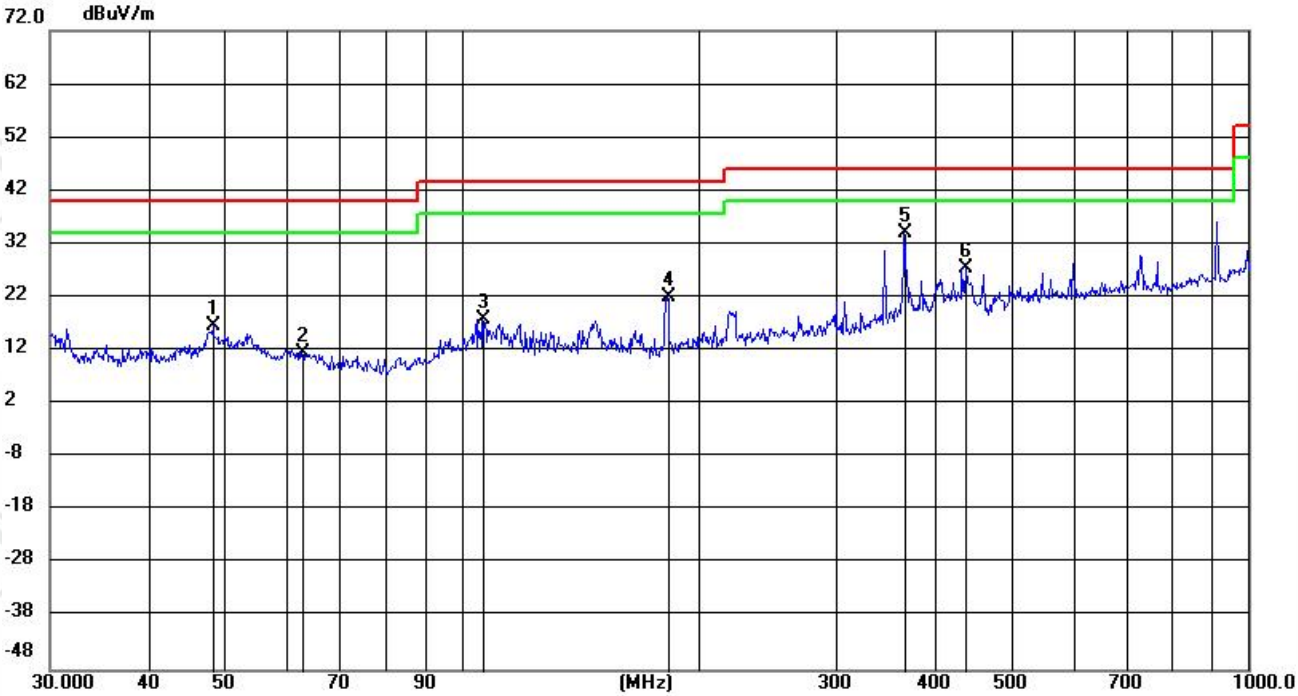

No.	Mk.	Freq.	Reading Level	Correct Factor	Measure-ment	Limit	Margin		Antenna Height	Table Degree	
		MHz	dBuV	dB/m	dBuV/m	dBuV/m	dB	Detector	cm	degree	Comment
1		48.4675	2.28	14.43	16.71	40.00	-23.29	QP	100	328	
2		62.7716	-1.15	12.81	11.66	40.00	-28.34	QP	100	123	
3		106.4037	4.07	13.87	17.94	43.50	-25.56	QP	100	63	
4		182.9437	10.64	11.44	22.08	43.50	-21.42	QP	100	157	
5	*	366.5017	15.66	18.45	34.11	46.00	-11.89	QP	100	174	
6		438.4248	7.68	19.79	27.47	46.00	-18.53	QP	100	183	

Remark:

1. Margin=Measurement(Level)-Limit.
2. Measurement(Level)=Reading Level+Correct Factor.
3. In the test results, an asterisk (*) indicates Maximum Data, a cross (X) indicates over Limit, an exclamation mark (!) indicates over -6dB margin Limit.

Radiated Spurious Emission above 1GHz:

During the test, the Radiated Spurious Emission from above 1GHz was performed in all modes, only the worst case GFSK mode was recorded in the report.

Test_Mode	GFSK Transmitting	Test_Frequency	2402Mhz
Tset_Engineer	chenjun	Test_Date	2025/10/11
Remark	23.66°C60.82%R		

Suspected List									
NO	Freq. [MHz]	Factor [dB]	Reading [dBμV]	Level [dBμV/m]	Limit [dBμV/m]	Margin [dB]	Result	Polarity	Remark
1	1135.609	11.43	37.70	49.13	74.00	24.87	PASS	Horizontal	PK
2	1813.9209	14.31	36.48	50.79	74.00	23.21	PASS	Horizontal	PK
3	3532.3855	-13.82	53.50	39.68	74.00	34.32	PASS	Horizontal	PK
4	4803.8703	-8.60	57.80	49.20	74.00	24.80	PASS	Horizontal	PK
5	7101.7735	-3.21	47.38	44.17	74.00	29.83	PASS	Horizontal	PK
6	11674.8283	2.53	45.79	48.32	74.00	25.68	PASS	Horizontal	PK

Test_Mode	GFSK Transmitting	Test_Frequency	2402Mhz
Tset_Engineer	chenjun	Test_Date	2025/10/11
Remark	23.66°C60.82%R		

Suspected List									
NO	Freq. [MHz]	Factor [dB]	Reading [dBμV]	Level [dBμV/m]	Limit [dBμV/m]	Margin [dB]	Result	Polarity	Remark
1	1134.2756	11.43	37.41	48.84	74.00	25.16	PASS	Vertical	PK
2	1818.3212	14.37	36.34	50.71	74.00	23.29	PASS	Vertical	PK
3	3198.2632	-14.46	58.79	44.33	74.00	29.67	PASS	Vertical	PK
4	4803.8703	-8.60	54.59	45.99	74.00	28.01	PASS	Vertical	PK
5	7992.3328	-1.37	48.31	46.94	74.00	27.06	PASS	Vertical	PK
6	11976.4484	3.12	46.28	49.40	74.00	24.60	PASS	Vertical	PK

Test_Mode	GFSK Transmitting	Test_Frequency	2441Mhz
Tset_Engineer	chenjun	Test_Date	2025/10/11
Remark	23.66°C60.82%R		

Suspected List									
NO	Freq. [MHz]	Factor [dB]	Reading [dBμV]	Level [dBμV/m]	Limit [dBμV/m]	Margin [dB]	Result	Polarity	Remark
1	1109.874	11.28	36.79	48.07	74.00	25.93	PASS	Horizontal	PK
2	1694.313	14.05	36.36	50.41	74.00	23.59	PASS	Horizontal	PK
3	3752.1001	-12.85	53.50	40.65	74.00	33.35	PASS	Horizontal	PK
4	4881.8755	-8.36	59.43	51.07	74.00	22.93	PASS	Horizontal	PK
5	7747.9165	-1.44	46.78	45.34	74.00	28.66	PASS	Horizontal	PK
6	11993.9996	3.13	45.12	48.25	74.00	25.75	PASS	Horizontal	PK

Test_Mode	GFSK Transmitting	Test_Frequency	2441Mhz
Tset_Engineer	chenjun	Test_Date	2025/10/11
Remark	23.66°C60.82%R		

Suspected List									
NO	Freq. [MHz]	Factor [dB]	Reading [dBμV]	Level [dBμV/m]	Limit [dBμV/m]	Margin [dB]	Result	Polarity	Remark
1	1142.2762	11.45	36.72	48.17	74.00	25.83	PASS	Vertical	PK
2	1916.5944	14.76	35.84	50.60	74.00	23.40	PASS	Vertical	PK
3	3200.2133	-14.46	57.96	43.50	74.00	30.50	PASS	Vertical	PK
4	4881.8755	-8.36	56.40	48.04	74.00	25.96	PASS	Vertical	PK
5	8000.1333	-1.36	49.16	47.80	74.00	26.20	PASS	Vertical	PK
6	11852.9402	2.55	45.91	48.46	74.00	25.54	PASS	Vertical	PK

Test_Mode	GFSK Transmitting	Test_Frequency	2480Mhz
Tset_Engineer	chenjun	Test_Date	2025/10/11
Remark	23.66°C60.82%R		

Suspected List									
NO	Freq. [MHz]	Factor [dB]	Reading [dBμV]	Level [dBμV/m]	Limit [dBμV/m]	Margin [dB]	Result	Polarity	Remark
1	1130.9421	11.43	37.20	48.63	74.00	25.37	PASS	Horizontal	PK
2	1851.9235	14.47	36.29	50.76	74.00	23.24	PASS	Horizontal	PK
3	3817.1045	-12.31	52.68	40.37	74.00	33.63	PASS	Horizontal	PK
4	4960.5307	-8.05	54.54	46.49	74.00	27.51	PASS	Horizontal	PK
5	7824.6216	-1.86	47.01	45.15	74.00	28.85	PASS	Horizontal	PK
6	12064.2043	2.94	45.89	48.83	74.00	25.17	PASS	Horizontal	PK

Test_Mode	GFSK Transmitting	Test_Frequency	2480Mhz
Tset_Engineer	chenjun	Test_Date	2025/10/11
Remark	23.66°C60.82%R		

Suspected List									
NO	Freq. [MHz]	Factor [dB]	Reading [dBμV]	Level [dBμV/m]	Limit [dBμV/m]	Margin [dB]	Result	Polarity	Remark
1	1112.0075	11.29	37.39	48.68	74.00	25.32	PASS	Vertical	PK
2	1875.7917	14.47	36.44	50.91	74.00	23.09	PASS	Vertical	PK
3	3187.2125	-14.50	58.81	44.31	74.00	29.69	PASS	Vertical	PK
4	4960.5307	-8.05	55.60	47.55	74.00	26.45	PASS	Vertical	PK
5	7978.0319	-1.38	46.96	45.58	74.00	28.42	PASS	Vertical	PK
6	11988.1492	3.12	44.77	47.89	74.00	26.11	PASS	Vertical	PK

Remark:

1) The field strength is calculated by adding the Antenna Factor, Cable Factor & Preamplifier. The basic equation with a sample calculation is as follows:

   Final Test Level =Receiver Reading + Antenna Factor + Cable Factor – Preamplifier Factor

2) Scan from 9kHz to 25GHz, the disturbance above 10GHz and below 30MHz was very low. As shown in this section, for frequencies above 1GHz, the field strength limits are based on average limits. However, the peak field strength of any emission shall not exceed the maximum permitted average limits specified

above by more than 20 dB under any condition of modulation. So, only the peak measurements were shown in the report.

Restricted bands:

Test plot as follows:

Test_Mode	GFSK Transmitting	Test_Frequency	2402Mhz
Tset_Engineer	chenjun	Test_Date	2025/10/11
Remark	23.66°C60.82%R		

Test Graph

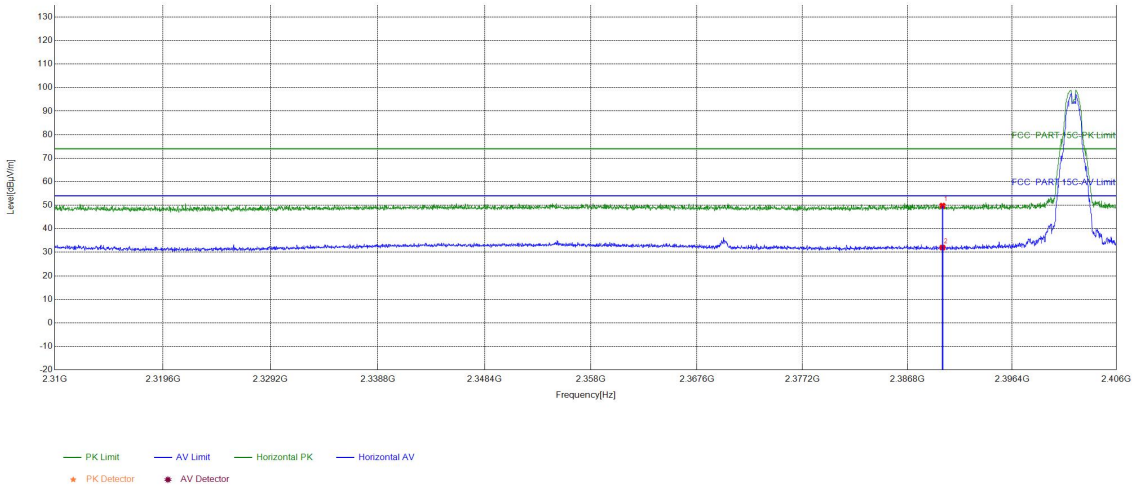

Suspected List									
NO	Freq. [MHz]	Factor [dB]	Reading [dBμV]	Level [dBμV/m]	Limit [dBμV/m]	Margin [dB]	Result	Polarity	Remark
1	2390	15.96	33.85	49.81	74.00	24.19	PASS	Horizontal	PK
2	2390	15.96	16.05	32.01	54.00	21.99	PASS	Horizontal	AV

Test_Mode	GFSK Transmitting	Test_Frequency	2402Mhz
Tset_Engineer	chenjun	Test_Date	2025/10/11
Remark	23.66°C60.82%R		

Test Graph

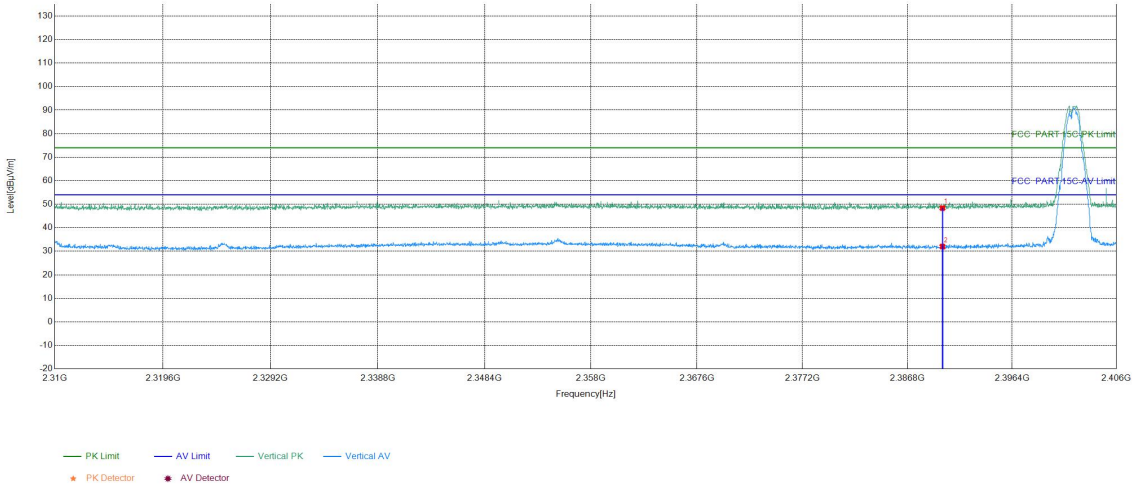

Suspected List									
NO	Freq. [MHz]	Factor [dB]	Reading [dBμV]	Level [dBμV/m]	Limit [dBμV/m]	Margin [dB]	Result	Polarity	Remark
1	2390	15.96	32.41	48.37	74.00	25.63	PASS	Vertical	PK
2	2390	15.96	16.06	32.02	54.00	21.98	PASS	Vertical	AV

Test_Mode	GFSK Transmitting	Test_Frequency	2480Mhz
Tset_Engineer	chenjun	Test_Date	2025/10/11
Remark	23.66°C60.82%R		

Test Graph

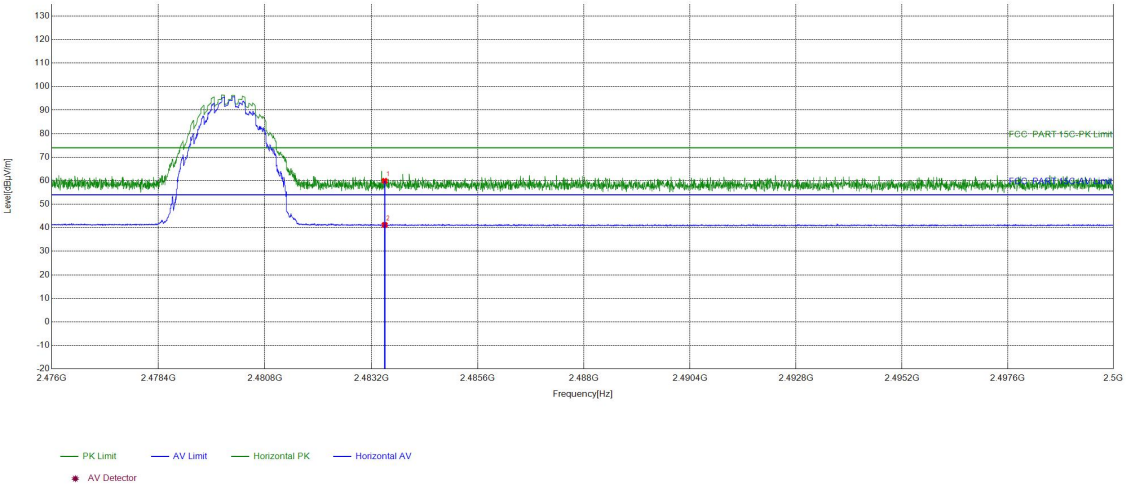

Suspected List									
NO	Freq. [MHz]	Factor [dB]	Reading [dBμV]	Level [dBμV/m]	Limit [dBμV/m]	Margin [dB]	Result	Polarity	Remark
1	2483.5	16.29	43.65	59.94	74.00	14.06	PASS	Horizontal	PK
2	2483.5	16.29	24.93	41.22	54.00	12.78	PASS	Horizontal	AV

Test_Mode	GFSK Transmitting	Test_Frequency	2480Mhz
Tset_Engineer	chenjun	Test_Date	2025/10/11
Remark	23.66°C60.82%R		

Test Graph

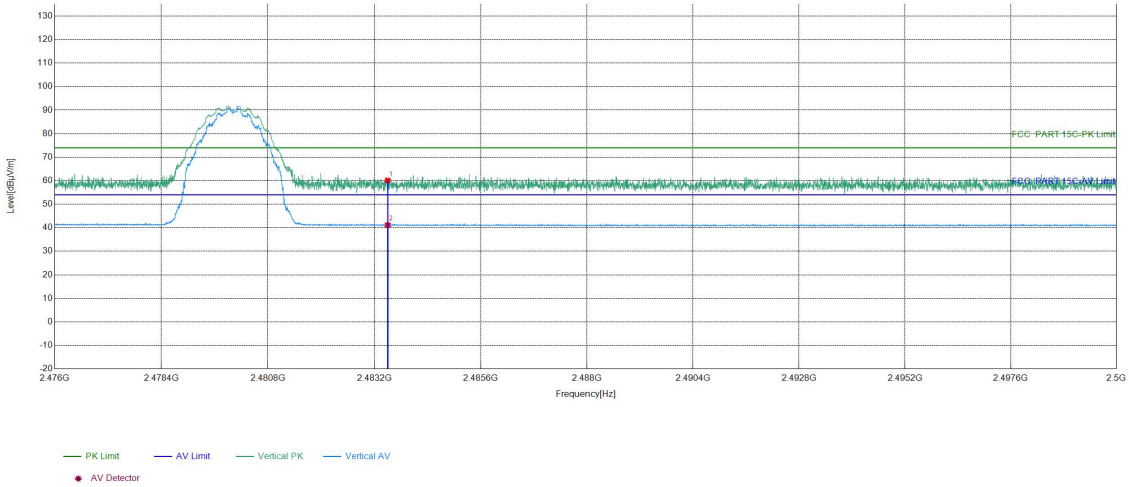

Suspected List									
NO	Freq. [MHz]	Factor [dB]	Reading [dBμV]	Level [dBμV/m]	Limit [dBμV/m]	Margin [dB]	Result	Polarity	Remark
1	2483.5	16.29	43.80	60.09	74.00	13.91	PASS	Vertical	PK
2	2483.5	16.29	24.83	41.12	54.00	12.88	PASS	Vertical	AV

Test_Mode	π/4DQPSK Transmitting	Test_Frequency	2402Mhz
Tset_Engineer	chenjun	Test_Date	2025/10/11
Remark	23.66°C60.82%R		

Test Graph

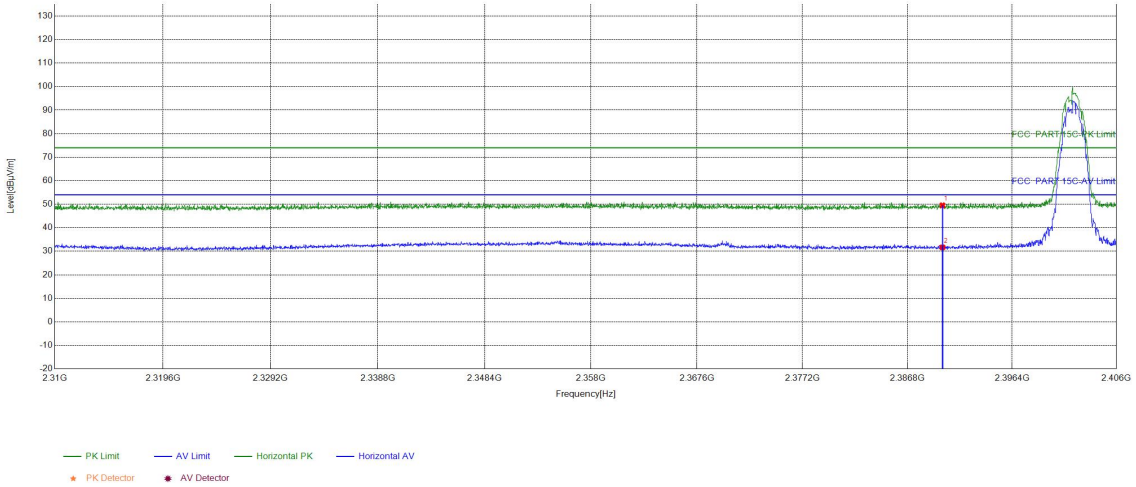

Suspected List									
NO	Freq. [MHz]	Factor [dB]	Reading [dBμV]	Level [dBμV/m]	Limit [dBμV/m]	Margin [dB]	Result	Polarity	Remark
1	2390	15.96	33.58	49.54	74.00	24.46	PASS	Horizontal	PK
2	2390	15.96	15.71	31.67	54.00	22.33	PASS	Horizontal	AV

Test_Mode	π/4DQPSK Transmitting	Test_Frequency	2402Mhz
Tset_Engineer	chenjun	Test_Date	2025/10/11
Remark	23.66°C60.82%R		

Test Graph

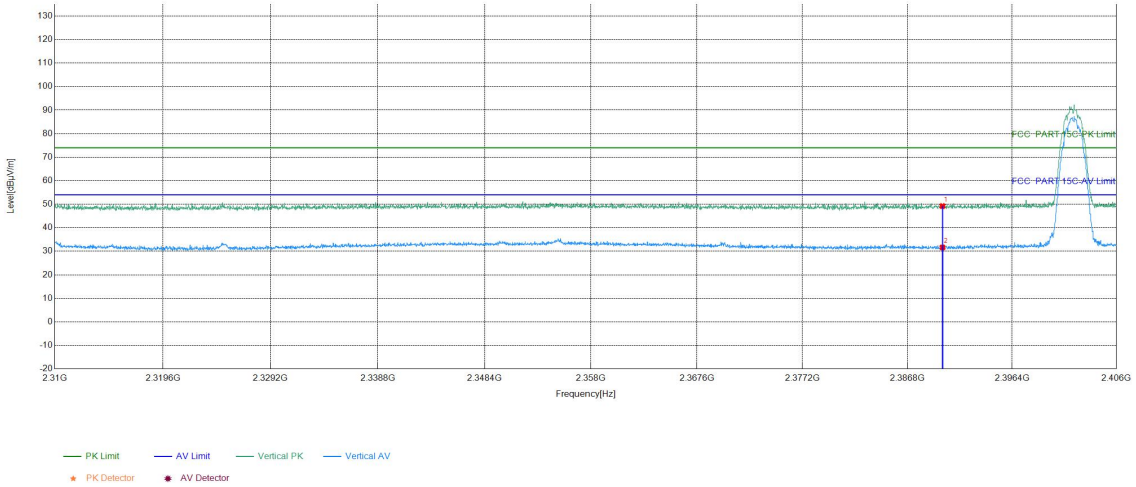

Suspected List									
NO	Freq. [MHz]	Factor [dB]	Reading [dBμV]	Level [dBμV/m]	Limit [dBμV/m]	Margin [dB]	Result	Polarity	Remark
1	2390	15.96	33.26	49.22	74.00	24.78	PASS	Vertical	PK
2	2390	15.96	15.67	31.63	54.00	22.37	PASS	Vertical	AV

Test_Mode	π/4DQPSK Transmitting	Test_Frequency	2480Mhz
Tset_Engineer	chenjun	Test_Date	2025/10/11
Remark	23.66°C60.82%R		

Test Graph

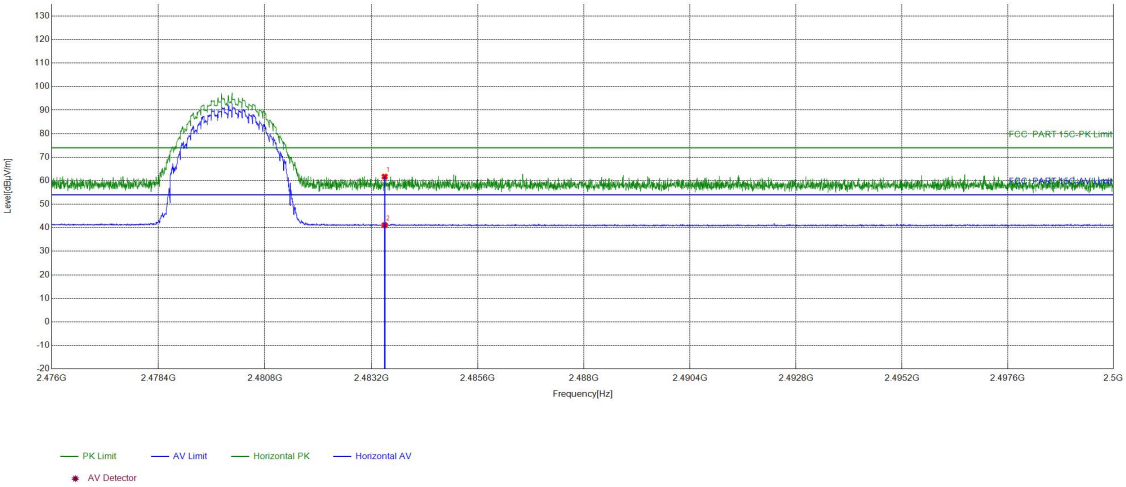

Suspected List									
NO	Freq. [MHz]	Factor [dB]	Reading [dBμV]	Level [dBμV/m]	Limit [dBμV/m]	Margin [dB]	Result	Polarity	Remark
1	2483.5	16.29	45.44	61.73	74.00	12.27	PASS	Horizontal	PK
2	2483.5	16.29	24.83	41.12	54.00	12.88	PASS	Horizontal	AV

Test_Mode	π/4DQPSK Transmitting	Test_Frequency	2480Mhz
Tset_Engineer	chenjun	Test_Date	2025/10/11
Remark	23.66°C60.82%R		

Test Graph

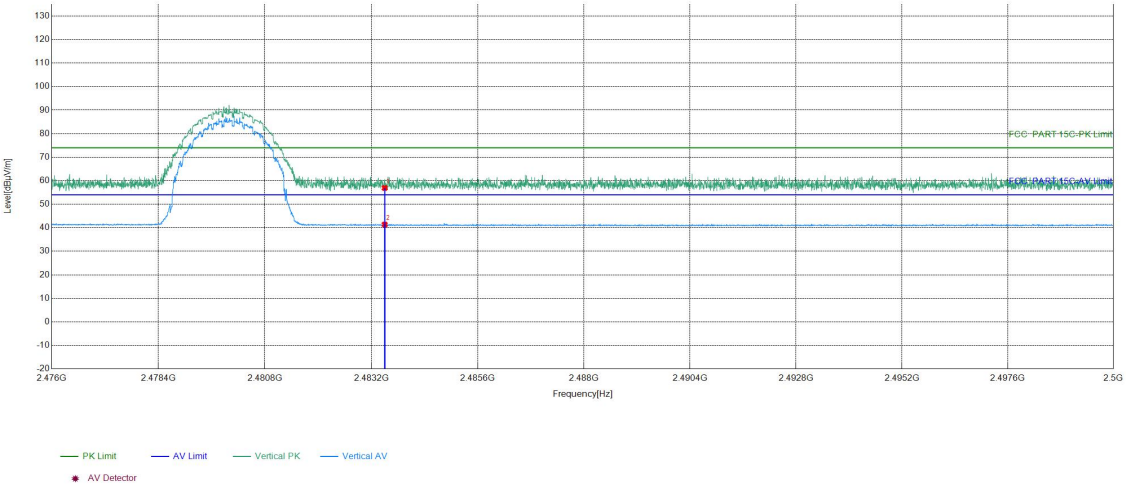

Suspected List									
NO	Freq. [MHz]	Factor [dB]	Reading [dBμV]	Level [dBμV/m]	Limit [dBμV/m]	Margin [dB]	Result	Polarity	Remark
1	2483.5	16.29	40.62	56.91	74.00	17.09	PASS	Vertical	PK
2	2483.5	16.29	25.07	41.36	54.00	12.64	PASS	Vertical	AV

Test_Mode	8DPSK Transmitting	Test_Frequency	2402Mhz
Tset_Engineer	chenjun	Test_Date	2025/10/11
Remark	23.66°C60.82%R		

Test Graph

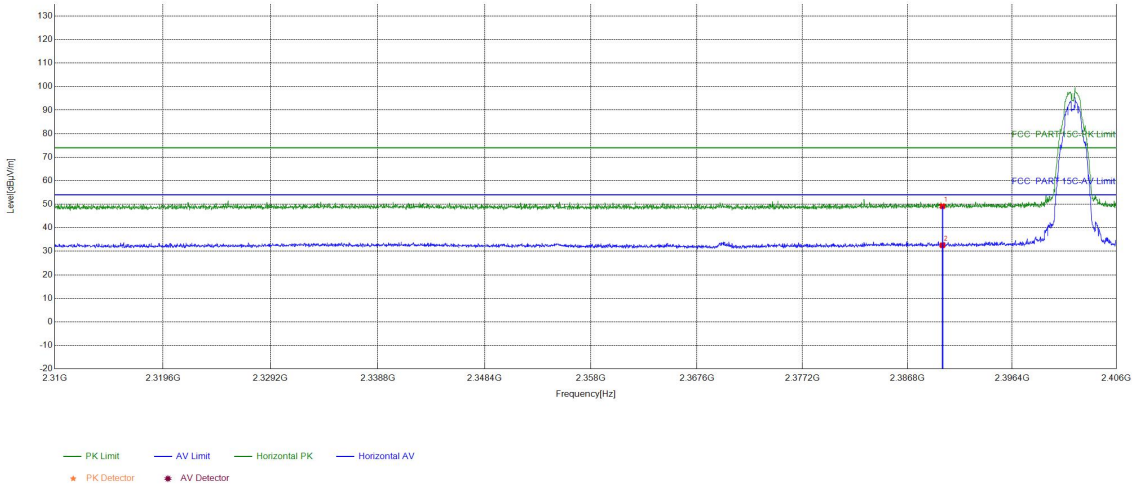

Suspected List									
NO	Freq. [MHz]	Factor [dB]	Reading [dBμV]	Level [dBμV/m]	Limit [dBμV/m]	Margin [dB]	Result	Polarity	Remark
1	2390	15.96	33.21	49.17	74.00	24.83	PASS	Horizontal	PK
2	2390	15.96	16.59	32.55	54.00	21.45	PASS	Horizontal	AV

Test_Mode	8DPSK Transmitting	Test_Frequency	2402Mhz
Tset_Engineer	chenjun	Test_Date	2025/10/11
Remark	23.66°C60.82%R		

Test Graph

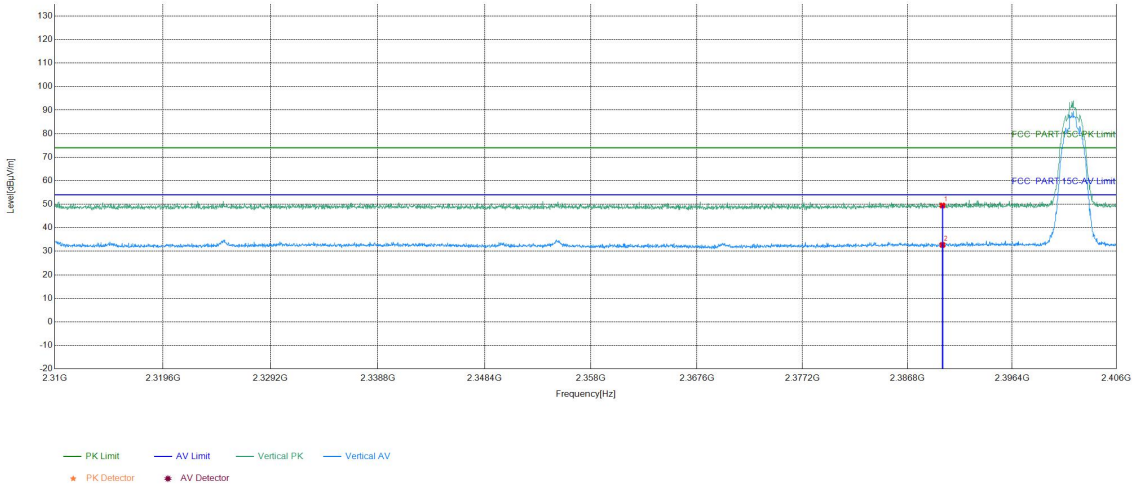

Suspected List									
NO	Freq. [MHz]	Factor [dB]	Reading [dBμV]	Level [dBμV/m]	Limit [dBμV/m]	Margin [dB]	Result	Polarity	Remark
1	2390	15.96	33.51	49.47	74.00	24.53	PASS	Vertical	PK
2	2390	15.96	16.74	32.70	54.00	21.30	PASS	Vertical	AV

Test_Mode	8DPSK Transmitting	Test_Frequency	2480Mhz
Tset_Engineer	chenjun	Test_Date	2025/10/11
Remark	23.66°C60.82%R		

Test Graph

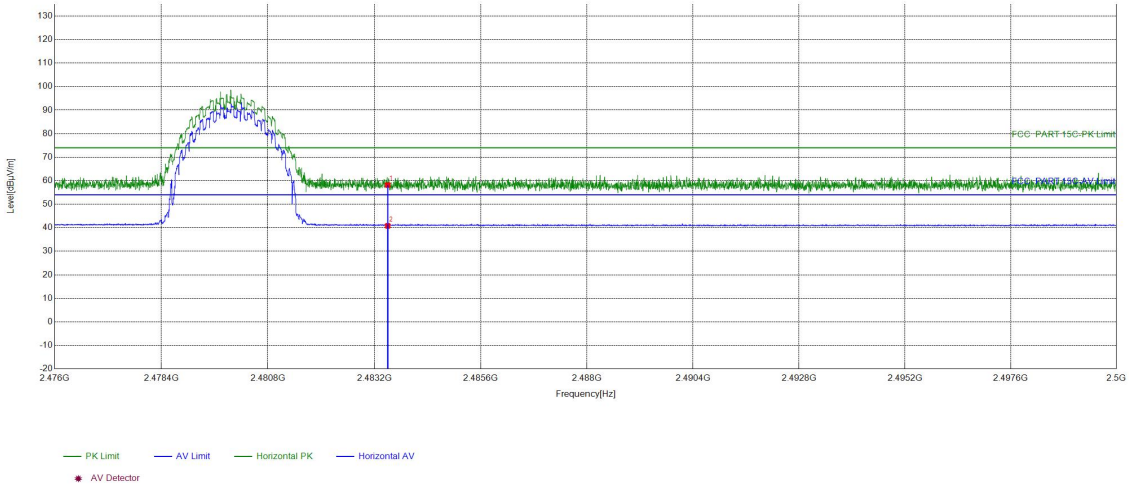

Suspected List									
NO	Freq. [MHz]	Factor [dB]	Reading [dBμV]	Level [dBμV/m]	Limit [dBμV/m]	Margin [dB]	Result	Polarity	Remark
1	2483.5	16.29	41.87	58.16	74.00	15.84	PASS	Horizontal	PK
2	2483.5	16.29	24.52	40.81	54.00	13.19	PASS	Horizontal	AV

Test_Mode	8DPSK Transmitting	Test_Frequency	2480Mhz
Tset_Engineer	chenjun	Test_Date	2025/10/11
Remark	23.66°C60.82%R		

Test Graph

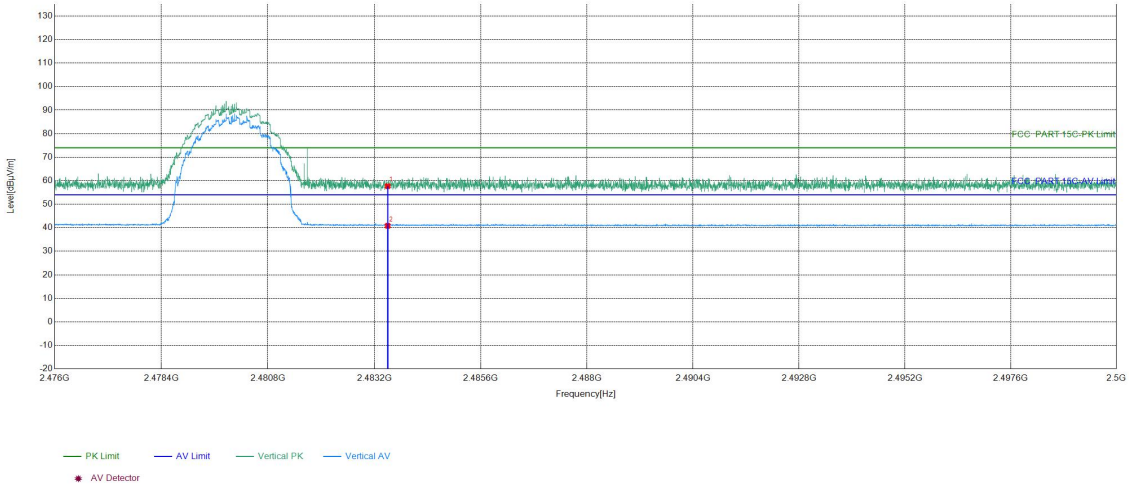

Suspected List									
NO	Freq. [MHz]	Factor [dB]	Reading [dBμV]	Level [dBμV/m]	Limit [dBμV/m]	Margin [dB]	Result	Polarity	Remark
1	2483.5	16.29	41.40	57.69	74.00	16.31	PASS	Vertical	PK
2	2483.5	16.29	24.54	40.83	54.00	13.17	PASS	Vertical	AV

Note:
The field strength is calculated by adding the Antenna Factor, Cable Factor & Preamplifier. The basic equation with a sample calculation is as follows:
Final Test Level =Receiver Reading - Correct Factor
Correct Factor = Preamplifier Factor– Antenna Factor–Cable Factor

5 Appendix A

Refer to Appendix: Bluetooth Classic of EED32R81755102

7 PHOTOGRAPHS OF EUT Constructional Details

Refer to Report No.EED32R81755101 for EUT external and internal photos.

Statement

1. This report is considered invalid without approved signature, special seal and the seal on the perforation;

2. The Company Name shown on Report and Address, the sample(s) and sample information was/were provided by the applicant who should be responsible for the authenticity which CTI hasn't verified;

3. The result(s) shown in this report refer(s) only to the sample(s) tested;

4. Unless otherwise stated,the decision rule for conformity reporting is based on Binary Statement for Simple Acceptance Rule stated in ILAC-G8:09/2019/CNAS-GL015:2022;

5. Without written approval of CTI, this report can't be reproduced except in full;

*** End of Report ***