FCC Part 15C Test Report
FCC ID: 2BSVJ-HZ01

Applicant:	Shenzhen Haozhen Technology Co., Ltd.
Address:	3rd Floor, Building 2, Hejing Industrial Zone, Fuyuan 1st Road, Zhancheng Community, Fuhai Street, Bao'an District, Shenzhen, China.
Manufacturer:	Shenzhen Haozhen Technology Co., Ltd.
Address:	3rd Floor, Building 2, Hejing Industrial Zone, Fuyuan 1st Road, Zhancheng Community, Fuhai Street, Bao'an District, Shenzhen, China.
EUT:	Selfie display screen
Trade Mark:	HOPEZEUS
Model Number:	HZ01 HZ02, HZ03, HZ04, HZ05, HZ06, HZ07, HZ08, HZ09, HZ11, HZ12, HZ13, HZ14, HZ15, HZ16, HZ17, HZ18, HZ19, HZ21, HZ22, HZ23, HZ24, HZ25, HZ26, HZ27, HZ28, HZ29
Date of Receipt:	Sep. 26, 2025
Test Date:	Sep. 26, 2025 - Oct. 17, 2025
Date of Report:	Oct. 17, 2025
Prepared By:	Shenzhen DL Testing Technology Co., Ltd.
Address:	101-201, Comprehensive Building, Tongzhou Electronics Longgang Factory Area, No.1 Baolong Fifth Road, Baolong Community, Baolong Street, Longgang District, Shenzhen, China
Applicable Standards:	FCC PART 15 C 15.249 ANSI C63.10-2020
Test Result:	Pass
Report Number:	DLE-250926007-1R

Prepared (Test Engineer):	Ken Tan
Reviewer (Supervisor):	Jack Bu
Approved (Manager):	Jade Yang

This test report is based on a single evaluation of one sample of above mentioned products. It is not permitted to be duplicated in extracts without written approval of Shenzhen DL Testing Technology Co., Ltd.

Table of Contents **Page**

1 . SUMMARY OF TEST RESULTS 4
1.1 MEASUREMENT UNCERTAINTY 4
2 . GENERAL INFORMATION 5
2.1 GENERAL DESCRIPTION OF EUT 5
2.2 DESCRIPTION OF TEST MODES 6
2.3 BLOCK DIGRAM SHOWING THE CONFIGURATION OF SYSTEM TESTED 6
2.4 DESCRIPTION OF SUPPORT UNITS(CONDUCTED MODE) 7
2.5 TABLE OF PARAMETERS OF TEST SOFTWARE SETTING 7
2.6 EQUIPMENTS LIST FOR ALL TEST ITEMS 8
3 . EMC EMISSION TEST 9
3.1 CONDUCTED EMISSION MEASUREMENT 9
3.1.1 POWER LINE CONDUCTED EMISSION LIMITS 9
3.1.2 TEST PROCEDURE 9
3.1.3 DEVIATION FROM TEST STANDARD 9
3.1.4 TEST SETUP 10
3.1.5 EUT OPERATING CONDITIONS 10
3.1.6 TEST RESULTS 10
3.2 RADIATED EMISSION MEASUREMENT 13
3.2.1 RADIATED EMISSION LIMITS 13
3.2.2 TEST PROCEDURE 14
3.2.3 DEVIATION FROM TEST STANDARD 14
3.2.4 TEST SETUP 14
3.2.5 EUT OPERATING CONDITIONS 15
3.2.6 TEST RESULTS (BETWEEN 9KHZ – 30 MHZ) 16
3.2.7 TEST RESULTS (BETWEEN 30MHZ – 1GHZ) 17
3.2.8 TEST RESULTS (1GHZ~25GHZ) 19
3.3 RADIATED BAND EMISSION MEASUREMENT 20
3.3.1 TEST REQUIREMENT: 20
3.3.2 TEST PROCEDURE 20
3.3.3 DEVIATION FROM TEST STANDARD 20
3.3.4 TEST SETUP 21
3.3.5 EUT OPERATING CONDITIONS 21
4 . BANDWIDTH TEST 23
4.1 APPLIED PROCEDURES / LIMIT 23
4.1.1 TEST PROCEDURE 23
4.1.2 DEVIATION FROM STANDARD 23
4.1.3 TEST SETUP 23

Table of Contents **Page**

4.1.4 EUT OPERATION CONDITIONS 23
4.1.5 TEST RESULTS 24
5 . ANTENNA REQUIREMENT 25
5.1 STANDARD REQUIREMENT 25
5.2 EUT ANTENNA 25
6 . TEST SEUUP PHOTO 25
7 . EUT PHOTO 25

1. SUMMARY OF TEST RESULTS

Test procedures according to the technical standards:

FCC Part15 (15.249) , Subpart C			
Standard Section	Test Item	Judgment	Remark
15.207	Conducted Emission	PASS	
15.205(a), 15.209(a) 15.249(a), 15.249(c)	Fundamental &Radiated Spurious Emission Measurement	PASS	
15.249(d)	Band Edge Emission	PASS	
15.215(c)	20dB Bandwidth	PASS	
15.203	Antenna Requirement	PASS	

NOTE:

(1)" N/A" denotes test is not applicable in this Test Report

Test lab: Shenzhen DL Testing Technology Co., Ltd.

Address: 101-201, Comprehensive Building, Tongzhou Electronics Longgang Factory Area, No.1 Baolong Fifth Road, Baolong Community, Baolong Street, Longgang District, Shenzhen, China

The test results presented in this report relate only to the object tested.

This report shall not be reproduced, except in full, without the written approval of the Issuing DL Testing Laboratory. The authenticity of this Test Report and its contents can be verified by contacting the DL Testing, responsible for this Test Report.

FCC Test Firm Registration Number: 854456
Designation Number: CN1307
IC Registered No.: 27485
CAB ID.: CN0118

1.1 MEASUREMENT UNCERTAINTY

The reported uncertainty of measurement **y ± U**, where expended uncertainty **U** is based on a standard uncertainty multiplied by a coverage factor of **k=2**,providing a level of confidence of approximately **95** %.

No.	Item	Uncertainty
1	Conducted Emission Test	±2.56dB
2	RF power,conducted	±0.42dB
3	Spurious emissions,conducted	±2.76dB
4	All emissions,radiated(<1G)	±3.65dB
5	All emissions,radiated(>1G)	±4.89dB
6	Temperature	±0.5°C
7	Humidity	±2%
8	20dB Bandwidth	±0.2MHz

2. GENERAL INFORMATION

2.1 GENERAL DESCRIPTION OF EUT

Product Name:	Selfie display screen
Trademark	Hopezeus
Model No.:	HZ01 HZ02, HZ03, HZ04, HZ05, HZ06, HZ07, HZ08, HZ09, HZ11, HZ12, HZ13, HZ14, HZ15, HZ16, HZ17, HZ18, HZ19, HZ21, HZ22, HZ23, HZ24, HZ25, HZ26, HZ27, HZ28, HZ29
Model Difference	All models are same as the samples except model name, they have the same structure and circuit.
Operation Frequency:	2402~2480MHz
Channel numbers:	40 Channels
Channel separation:	2MHz
Modulation technology:	GFSK
Antenna Type:	Internal antenna
Antenna gain:	-1.78dBi
Power supply:	DC 3.7V from battery DC 5V from charger

Note:
1.For a more detailed features description, please refer to the manufacturer's specifications or the User's Manual.
2.The EUT's all information provided by client.

3.

Channel List					
Channel	Frequency (MHz)	Channel	Frequency (MHz)	Channel	Frequency (MHz)
00	2402	14	2430	27	2456
01	2404	15	2432	28	2458
02	2406	16	2434	29	2460
03	2408	17	2436	30	2462
04	2410	18	2438	31	2464
05	2412	19	2440	32	2466
06	2414	20	2442	33	2468
07	2416	21	2444	34	2470
08	2418	22	2446	35	2472
09	2420	23	2448	36	2474
10	2422	24	2450	37	2476
11	2424	25	2452	38	2478
12	2426	26	2454	39	2480
13	2428	/	/	/	/

2.2 DESCRIPTION OF TEST MODES

To investigate the maximum EMI emission characteristics generates from EUT, the test system was pre-scanning tested base on the consideration of following EUT operation mode or test configuration mode which possible have effect on EMI emission level. Each of these EUT operation mode(s) or test configuration mode(s) mentioned above was evaluated respectively.

Pretest Mode	Description	
Mode 1	CH00	GFSK
Mode 2	CH19	
Mode 3	CH39	
Mode 4	Link Mode	

For Radiated Emission		
Final Test Mode	Description	
Mode 1	CH00	GFSK
Mode 2	CH19	
Mode 3	CH39	
Mode 4	Link Mode	

Note:

(1) The measurements are performed at the highest, middle, lowest available channels.

2.3 BLOCK DIGRAM SHOWING THE CONFIGURATION OF SYSTEM TESTED

Radiated Spurious Emission Test

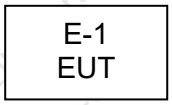

Power Line Conducted Emission Test

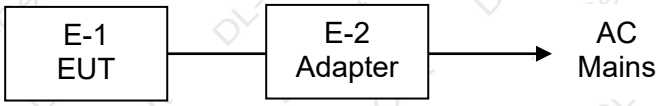

2.4 DESCRIPTION OF SUPPORT UNITS(CONDUCTED MODE)

The EUT has been tested as an independent unit together with other necessary accessories or support units. The following support units or accessories were used to form a representative test configuration during the tests.

Item	Equipment	Model/Type No.	Series No.	Note
E-1	Selfie display screen	HZ01	N/A	EUT
E-2	Adapter	HW-0501000E	N/A	XIAOMI

Item	Shielded Type	Ferrite Core	Length	Note

Note:

(1) For detachable type I/O cable should be specified the length in cm in『Length』column.

2.5 TABLE OF PARAMETERS OF TEST SOFTWARE SETTING

During testing, channel & power controlling software provided by the customer was used to control the operating channel as well as the output power level. The RF output power selection is for the setting of RF output power expected by the customer and is going to be fixed on the end product.

Test software Version	Test program: RF Test_V1.2		
Frequency	2402 MHz	2440 MHz	2480 MHz
Power Setting of Softwave	10	10	10

2.6 EQUIPMENTS LIST FOR ALL TEST ITEMS

Radiation test, Band-edge test and 20db bandwidth test equipment

Item	Equipment	Manufacturer	Type No.	Serial No.	Last calibration	Calibrated until
1	Spectrum Analyzer (9kHz-26.5GHz)	Agilent	E4408B	MY50140780	Nov. 01, 2024	Oct. 31, 2025
2	Test Receiver (9kHz-7GHz)	R&S	ESRP7	101393	Nov. 01, 2024	Oct. 31, 2025
3	Bilog Antenna (30MHz-1GHz)	R&S	VULB9162	00306	Nov. 01, 2024	Oct. 31, 2025
4	Horn Antenna (1GHz-18GHz)	Schwarzbeck	BBHA9120D	02139	Nov. 01, 2024	Oct. 31, 2025
5	Horn Antenna (18GHz-40GHz)	A.H. Systems	SAS-574	588	Nov. 01, 2024	Oct. 31, 2025
6	Amplifier (9KHz-6GHz)	Schwarzbeck	BBV9743B	00153	Nov. 01, 2024	Oct. 31, 2025
7	Amplifier (1GHz-18GHz)	EMEC	EM01G8GA	00270	Nov. 01, 2024	Oct. 31, 2025
8	Amplifier (18GHz-40GHz)	Quanjuda	DLE-161	97	Nov. 01, 2024	Oct. 31, 2025
9	Loop Antenna (9KHz-30MHz)	Schwarzbeck	FMZB1519B	00014	Nov. 01, 2024	Oct. 31, 2025
10	RF cables1 (9kHz-1GHz)	ChengYu	966	004	Nov. 01, 2024	Oct. 31, 2025
11	RF cables2 (1GHz-40GHz)	ChengYu	966	003	Nov. 01, 2024	Oct. 31, 2025
12	Antenna connector	Florida RF Labs	N/A	RF 01#	Nov. 01, 2024	Oct. 31, 2025
13	Power probe	KEYSIGHT	U2021XA	MY55210018	Nov. 01, 2024	Oct. 31, 2025
14	Signal Analyzer 9kHz-26.5GHz	Agilent	N9020A	MY55370280	Nov. 01, 2024	Oct. 31, 2025
15	Test Receiver 20kHz-40GHz	R&S	ESU 40	100376	Nov. 01, 2024	Oct. 31, 2025
16	D.C. Power Supply	LongWei	PS-305D	010964729	Nov. 01, 2024	Oct. 31, 2025
17	Temperature & humidity chamber	Changfeng	CF-150-40-P	CF170802-01	Nov. 01, 2024	Oct. 31, 2025

Conduction Test equipment

Item	Equipment	Manufacturer	Type No.	Serial No.	Last calibration	Calibrated until
1	843 Shielded Room	YIHENG	843 Room	843	Nov. 05, 2023	Nov. 04, 2026
2	EMI Receiver	R&S	ESR	101421	Nov. 01, 2024	Oct. 31, 2025
3	LISN	R&S	ENV216	102417	Nov. 01, 2024	Oct. 31, 2025
4	843 Cable 1#	ChengYu	CE Cable	001	Nov. 01, 2024	Oct. 31, 2025

Other

Item	Name	Manufacturer	Model	Software version
1	EMC Conduction Test System	FALA	EZ_EMC	EMC-CON 3A1.1
2	EMC radiation test system	FALA	EZ_EMC	FA-03A2
3	RF test system	MAIWEI	MTS8310	2.0.0.0
4	RF communication test system	MAIWEI	MTS8200	2.0.0.0

3. EMC EMISSION TEST

3.1 CONDUCTED EMISSION MEASUREMENT

3.1.1 POWER LINE CONDUCTED EMISSION Limits (Frequency Range 150KHz-30MHz)

FREQUENCY (MHz)	Limit (dBuV)		Standard
	Quasi-peak	Average	
0.15 -0.5	66 - 56 *	56 - 46 *	FCC
0.50 -5.0	56.00	46.00	FCC
5.0 -30.0	60.00	50.00	FCC

Note:

(1) The tighter limit applies at the band edges.

(2) The limit of " * " marked band means the limitation decreases linearly with the logarithm of the frequency in the range.

The following table is the setting of the receiver

Receiver Parameters	Setting
Attenuation	10 dB
Start Frequency	0.15 MHz
Stop Frequency	30 MHz
IF Bandwidth	9 kHz

3.1.2 TEST PROCEDURE

a. The EUT was placed 0.8 meters from the horizontal ground plane with EUT being connected to the power mains through a line impedance stabilization network (LISN). All other support equipments powered from additional LISN(s). The LISN provide 50 Ohm/ 50uH of coupling impedance for the measuring instrument.

b. Interconnecting cables that hang closer than 40 cm to the ground plane shall be folded back and forth in the center forming a bundle 30 to 40 cm long.

c. I/O cables that are not connected to a peripheral shall be bundled in the center. The end of the cable may be terminated, if required, using the correct terminating impedance. The overall length shall not exceed 1 m.

d. LISN at least 80 cm from nearest part of EUT chassis.

e. For the actual test configuration, please refer to the related Item –EUT Test Photos.

3.1.3 DEVIATION FROM TEST STANDARD

No deviation

3.1.4 TEST SETUP

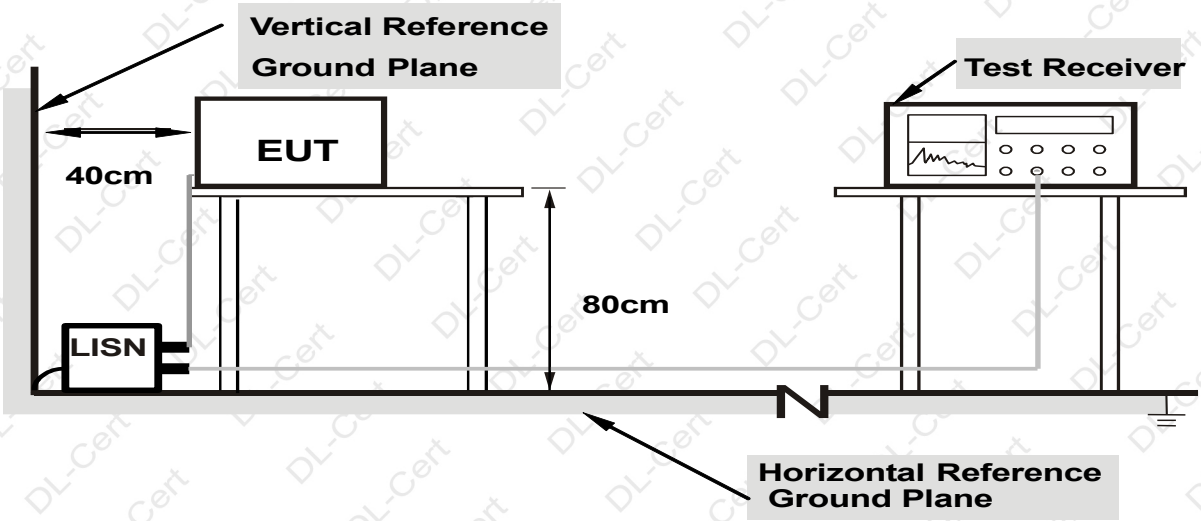

Note: 1.Support units were connected to second LISN.
2.Both of LISNs (AMN) are 80 cm from EUT and at least 80 from other units and other metal planes

3.1.5 EUT OPERATING CONDITIONS

The EUT was configured for testing in a typical fashion (as a customer would normally use it). The EUT has been programmed to continuously transmit during test. This operating condition was tested and used to collect the included data.
We pretest AC 120V and AC 230V, the worst voltage was AC 120V and the data recording in the report.

3.1.6 TEST RESULTS

PASS
Please refer to the following page.

Temperature:	25 ℃	Relative Humidity:	54%
Pressure:	1010hPa	Phase :	L
Test Voltage :	AC 120V/60Hz	Test Mode:	Mode 4

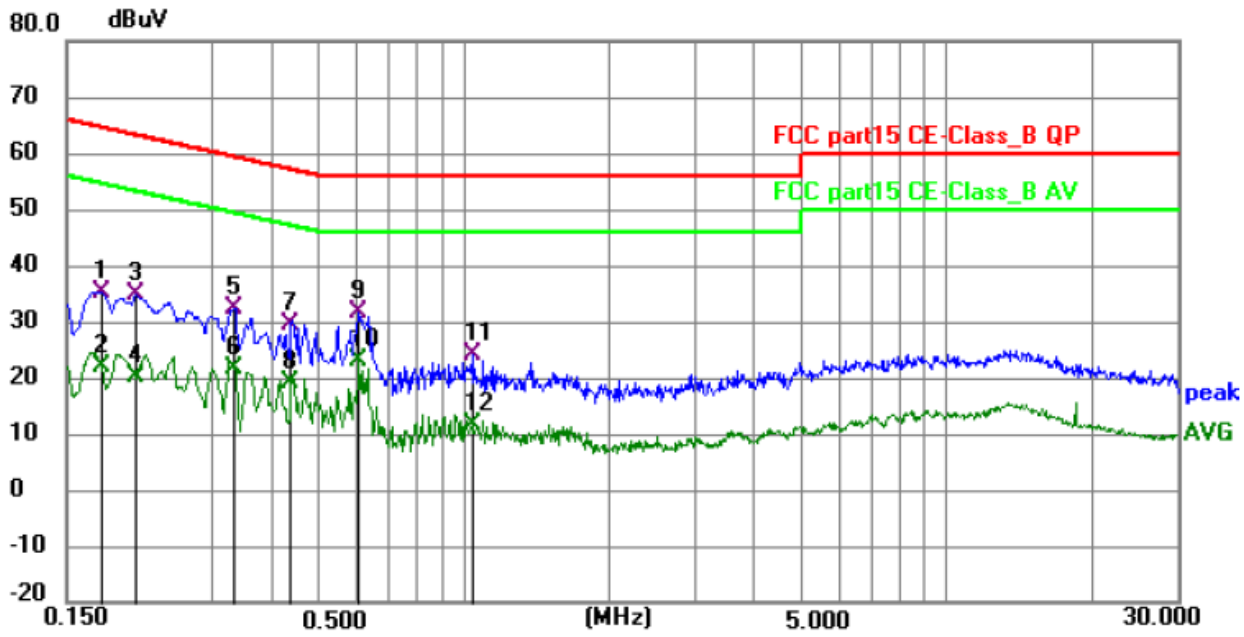

Remark:

Margin = Limit – Level, Correct Factor = Cable lose + LISN insertion loss, Level= Reading + Correct factor

No.	Frequency (MHz)	Reading (dBuV)	Factor (dB)	Level (dBuV)	Limit (dBuV)	Margin (dB)	Detector	P/F	Remark
1	0.1770	25.30	10.04	35.34	64.63	-29.29	QP	P	
2	0.1770	12.02	10.04	22.06	54.63	-32.57	AVG	P	
3	0.2085	24.61	10.10	34.71	63.26	-28.55	QP	P	
4	0.2085	9.93	10.10	20.03	53.26	-33.23	AVG	P	
5	0.3345	22.00	10.23	32.23	59.34	-27.11	QP	P	
6	0.3345	11.53	10.23	21.76	49.34	-27.58	AVG	P	
7	0.4380	19.20	10.23	29.43	57.10	-27.67	QP	P	
8	0.4380	8.71	10.23	18.94	47.10	-28.16	AVG	P	
9	0.6045	21.46	10.14	31.60	56.00	-24.40	QP	P	
10 *	0.6045	12.73	10.14	22.87	46.00	-23.13	AVG	P	
11	1.0410	13.93	10.04	23.97	56.00	-32.03	QP	P	
12	1.0410	1.73	10.04	11.77	46.00	-34.23	AVG	P	

Temperature:	25 ℃	Relative Humidity:	54%
Pressure:	1010hPa	Phase :	N
Test Voltage :	AC 120V/60Hz	Test Mode:	Mode 4

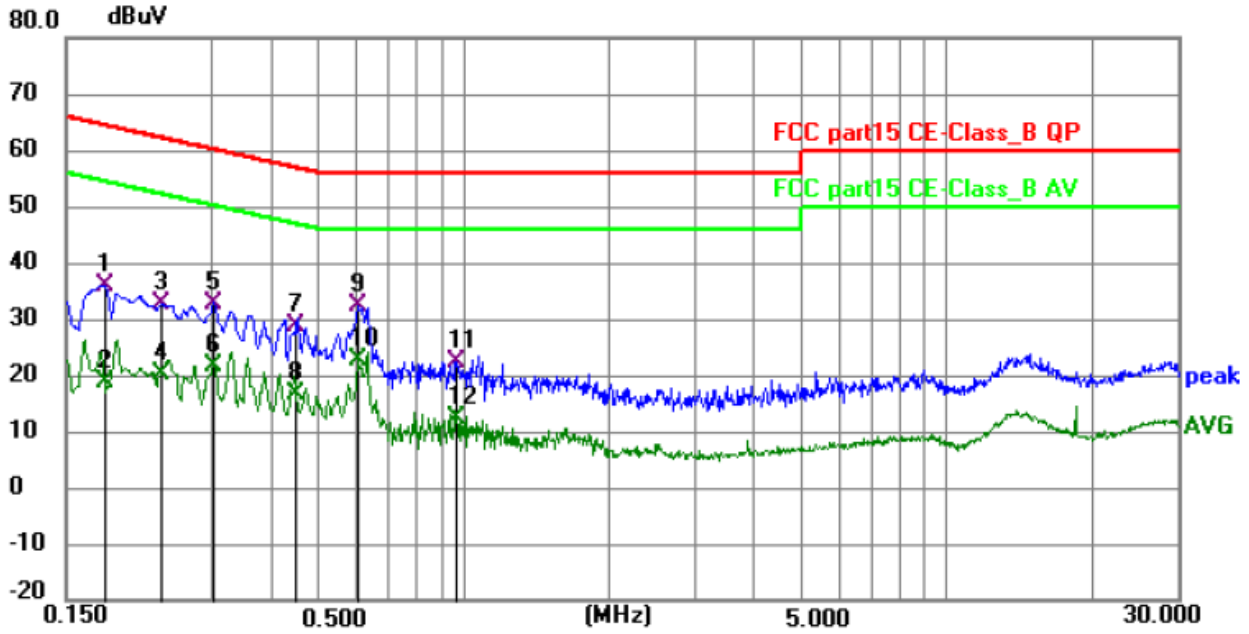

Remark:

Margin = Limit – Level, Correct Factor = Cable lose + LISN insertion loss, Level= Reading + Correct factor

No.	Frequency (MHz)	Reading (dBuV)	Factor (dB)	Level (dBuV)	Limit (dBuV)	Margin (dB)	Detector	P/F	Remark
1	0.1815	25.80	10.15	35.95	64.42	-28.47	QP	P	
2	0.1815	8.45	10.15	18.60	54.42	-35.82	AVG	P	
3	0.2355	22.44	10.19	32.63	62.25	-29.62	QP	P	
4	0.2355	10.13	10.19	20.32	52.25	-31.93	AVG	P	
5	0.3030	22.42	10.19	32.61	60.16	-27.55	QP	P	
6	0.3030	11.54	10.19	21.73	50.16	-28.43	AVG	P	
7	0.4515	18.50	10.18	28.68	56.85	-28.17	QP	P	
8	0.4515	6.39	10.18	16.57	46.85	-30.28	AVG	P	
9	0.6045	22.25	10.17	32.42	56.00	-23.58	QP	P	
10 *	0.6045	12.56	10.17	22.73	46.00	-23.27	AVG	P	
11	0.9645	12.32	10.10	22.42	56.00	-33.58	QP	P	
12	0.9645	2.31	10.10	12.41	46.00	-33.59	AVG	P	

3.2 RADIATED EMISSION MEASUREMENT

3.2.1 RADIATED EMISSION LIMITS (Frequency Range 9kHz-1000MHz)

In case the emission fall within the restricted band specified on 15.205(a), then the 15.209(a) limit in the table below has to be followed.

Frequency (MHz)	Field Strength (micorvolts/meter)	Measurement Distance (meters)
0.009~0.490	2400/F(KHz)	300
0.490~1.705	24000/F(KHz)	30
1.705~30.0	30	30
30~88	100	3
88~216	150	3
216~960	200	3
Above 960	500	3

The field strength of emissions from intentional radiators operated within these frequency bands shall comply with the following:

Fundamental Frequency	Field Strength of Fundamental (millivolts/meter)	Field Strength of Harmonics (microvolts/meter)
902 - 928 MHz	50	500
2400 - 2483.5 MHz	50	500
5725 - 5875 MHz	50	500
24.0 - 24.25 GHz	250	2500

LIMITS OF RADIATED EMISSION MEASUREMENT (Above 1000MHz)

FREQUENCY (MHz)	Limit (dBuV/m) (at 3M)	
	PEAK	AVERAGE
Above 1000	74	54

Notes:

(1) The limit for radiated test was performed according to FCC PART 15C.

(2) The tighter limit applies at the band edges.

(3) Emission level (dBuV/m)=20log Emission level (uV/m).

(4) Emissions radiated outside of the specified frequency bands, except for harmonics, shall be attenuated by at least 50 dB below the level of the fundamental or to the general radiated emission limits in § 15.209, whichever is the lesser attenuation.

Receiver setup:

Frequency	Detector	RBW	VBW	Value
9KHz-150KHz	Quasi-peak	200Hz	600Hz	Quasi-peak
150KHz-30MHz	Quasi-peak	9KHz	30KHz	Quasi-peak
30MHz-1GHz	Quasi-peak	100KHz	300KHz	Quasi-peak
Above 1GHz	Peak	1MHz	3MHz	Peak

	Peak	1MHz	10Hz	Average

3.2.2 TEST PROCEDURE

Below 1GHz test procedure as below:

a. The EUT was placed on the top of a rotating table 0.8 meters above the ground at a 3 meter semi-anechoic camber. The table was rotated 360 degrees to determine the position of the highest radiation.
b. The EUT was set 3 meters away from the interference-receiving antenna, which was mounted on the top of a variable-height antenna tower.
c. The antenna height is varied from one meter to four meters above the ground to determine the maximum value of the field strength. Both horizontal and vertical polarizations of the antenna are set to make the measurement.
d. For each suspected emission, the EUT was arranged to its worst case and then the antenna was tuned to heights from 1 meter to 4 meters (for the test frequency of below 30MHz, the antenna was tuned to heights 1 meter) and the rotatable table was turned from 0 degrees to 360 degrees to find the maximum reading.
e. The test-receiver system was set to Peak Detect Function and Specified Bandwidth with Maximum Hold Mode.
f. If the emission level of the EUT in peak mode was 10dB lower than the limit specified, then testing could be stopped and the peak values of the EUT would be reported. Otherwise the emissions that did not have 10dB margin would be re-tested one by one using peak, quasi-peak or average method as specified and then reported in a data sheet.

Above 1GHz test procedure as below:

g. The EUT was placed on the top of a rotating table 1.5 meters above the ground at a 3 meter semi-anechoic camber.
h. Test the EUT in the lowest channel ,the middle channel ,the Highest channel

Note:

Both horizontal and vertical antenna polarities were tested
and performed pretest to three orthogonal axis. The worst case emissions were reported

3.2.3 DEVIATION FROM TEST STANDARD

No deviation

3.2.4 TEST SETUP

（A）Radiated Emission Test-Up Frequency Below 30MHz

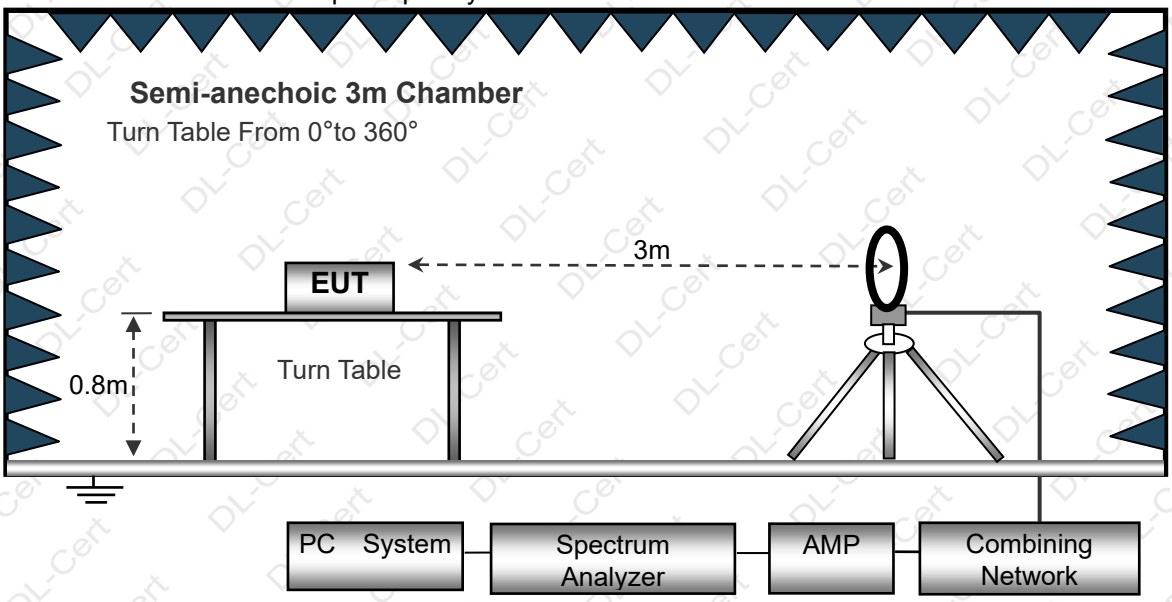

（B）Radiated Emission Test-Up Frequency 30MHz~1GHz

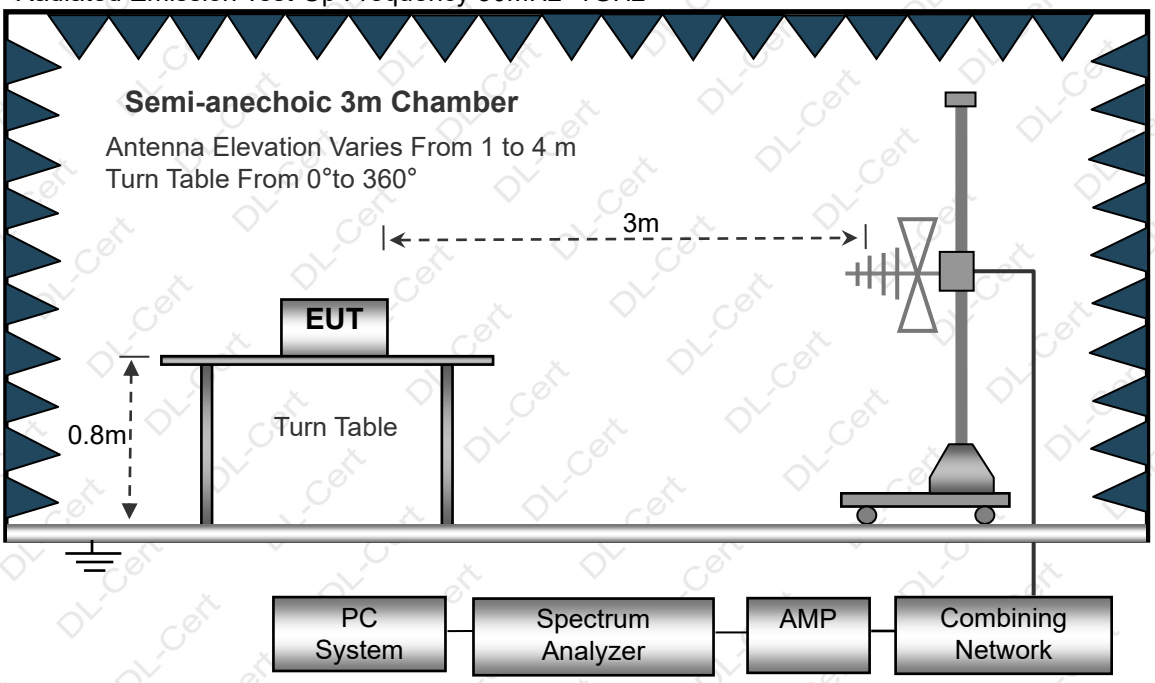

（C）Radiated Emission Test-Up Frequency Above 1GHz

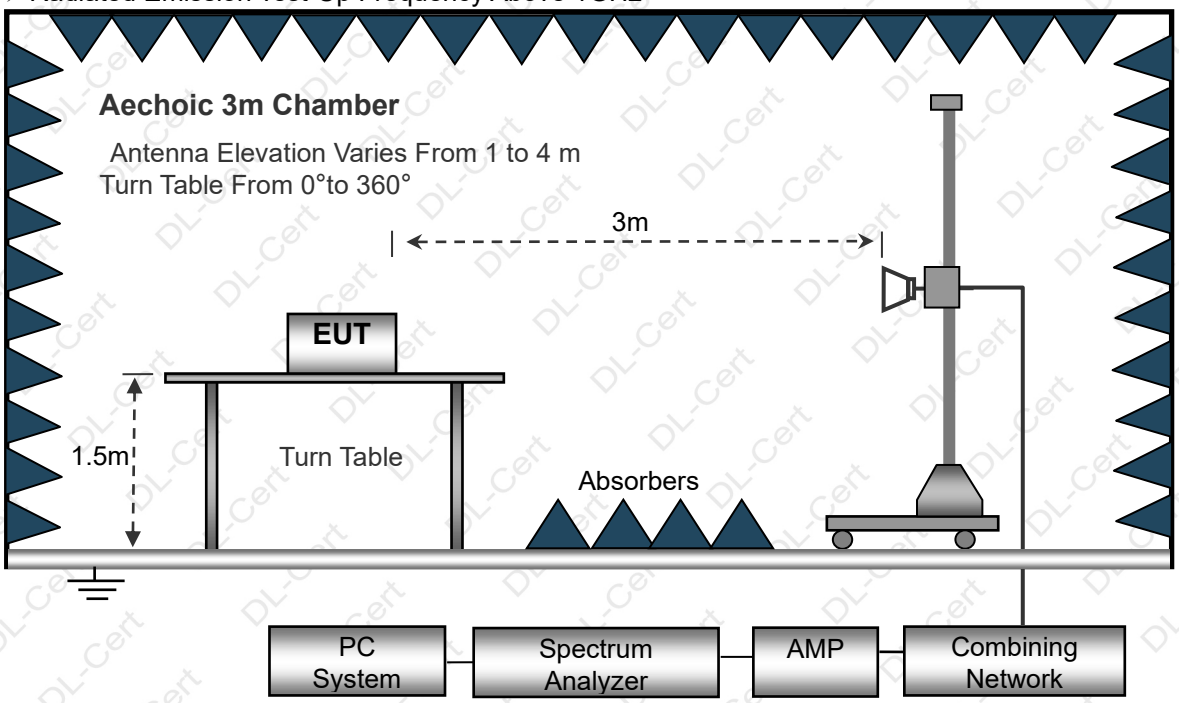

3.2.5 EUT OPERATING CONDITIONS

The EUT tested system was configured as the statements of 2.3 Unless otherwise a special operating condition is specified in the follows during the testing.

3.2.6 TEST RESULTS (BETWEEN 9KHZ – 30 MHZ)

Temperature:	20℃	Relative Humidtity:	48%
Pressure:	1010 hPa	Test Voltage :	DC 3.7V
Test Mode :	Mode 4	Polarization :	--

Freq.	Reading	Limit	Margin	State
(MHz)	(dBuV/m)	(dBuV/m)	(dB)	P/F
--	--	--	--	PASS
--	--	--	--	PASS

NOTE:

The amplitude of spurious emissions which are attenuated by more than 20dB below the permissible value has no need to be reported.
Distance extrapolation factor =40 log (specific distance/test distance)(dB);
Limit line = specific limits(dBuv) + distance extrapolation factor.

3.2.7 TEST RESULTS (BETWEEN 30MHZ – 1GHZ)

Temperature:	26℃	Relative Humidity:	54%
Pressure:	1010 hPa	Polarization :	Horizontal
Test Voltage :	DC 3.7V		
Test Mode :	Mode 4		

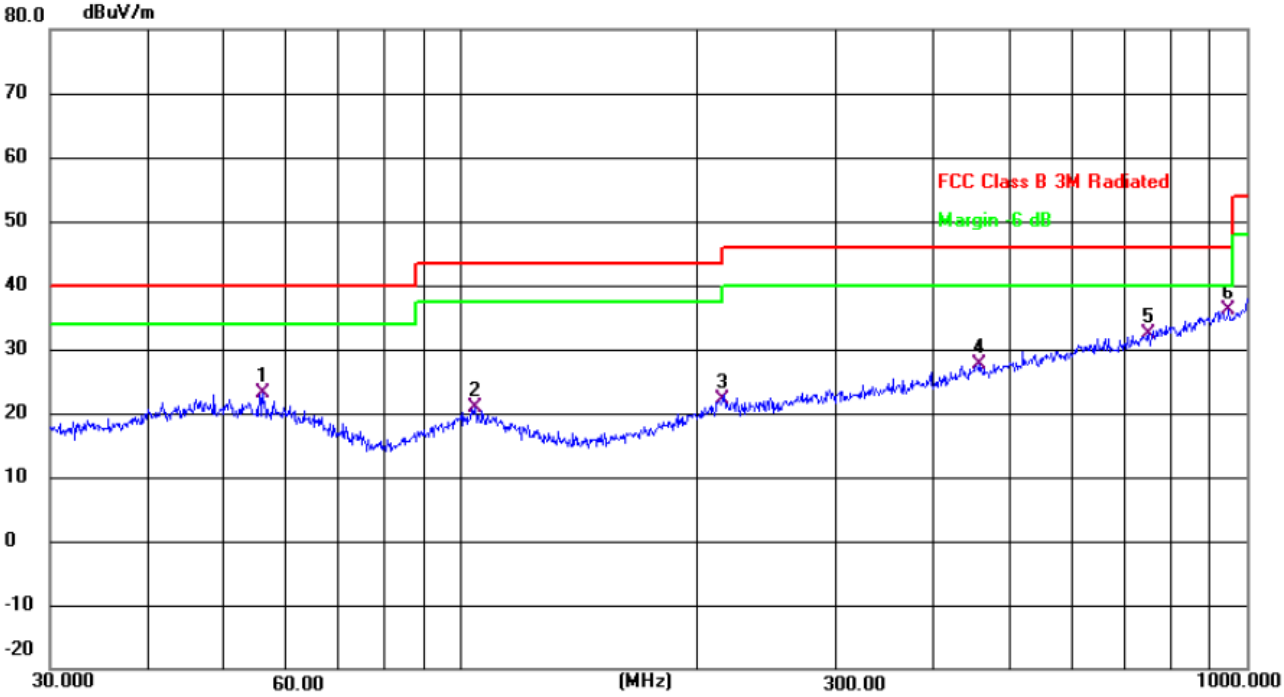

No.	Mk.	Freq.	Reading Level	Correct Factor	Measure-ment	Limit	Margin	
		MHz	dBuV	dB/m	dBuV/m	dBuV/m	dB	Detector
1		56.0007	30.45	-7.31	23.14	40.00	-16.86	QP
2		104.1701	29.34	-8.47	20.87	43.50	-22.63	QP
3		215.2678	30.38	-8.20	22.18	43.50	-21.32	QP
4		457.5073	29.78	-2.13	27.65	46.00	-18.35	QP
5		750.1083	29.31	3.07	32.38	46.00	-13.62	QP
6	*	948.7610	30.54	5.51	36.05	46.00	-9.95	QP

Remark:

Correct Factor = Cable loss + Antenna factor – Preamplifier;

Level = Reading Level + Correct Factor; Margin = Level - Limit;

Temperature:	26℃	Relative Humidity:	54%
Pressure:	1010 hPa	Polarization :	Vertical
Test Voltage :	DC 3.7V		
Test Mode :	Mode 4		

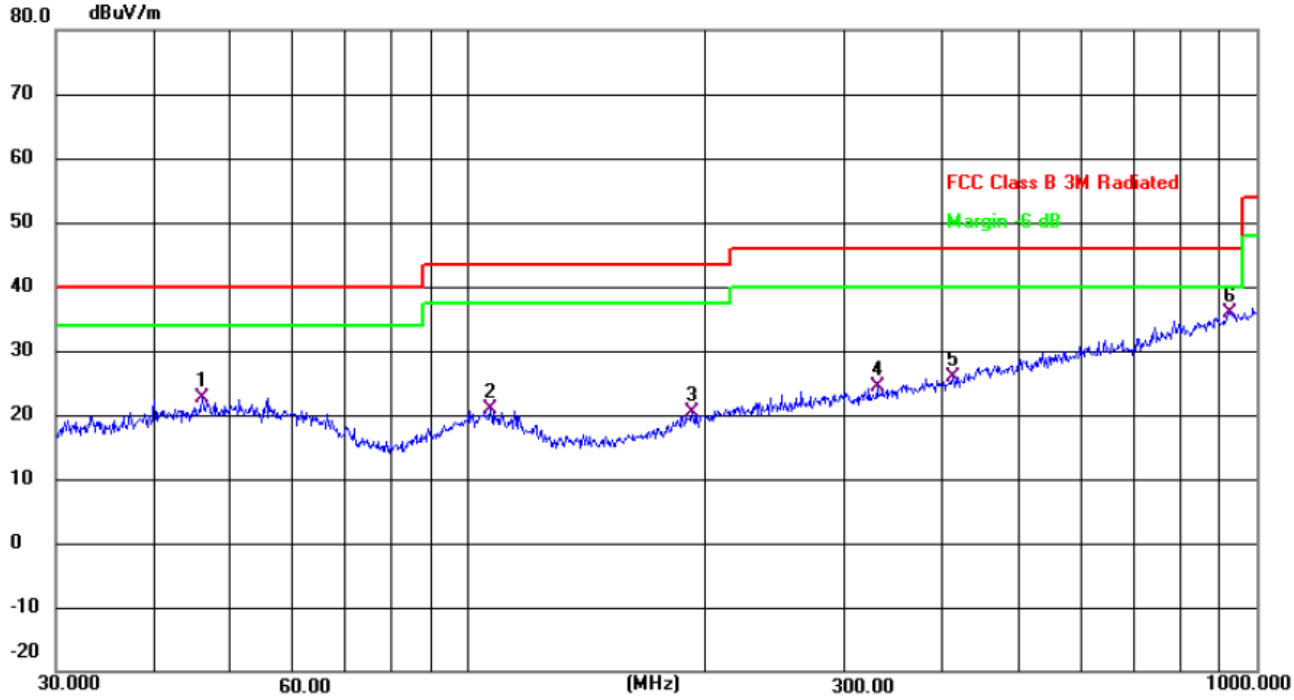

No.	Mk.	Freq.	Reading Level	Correct Factor	Measure-ment	Limit	Margin	
		MHz	dBuV	dB/m	dBuV/m	dBuV/m	dB	Detector
1		46.0164	29.08	-6.35	22.73	40.00	-17.27	QP
2		106.7587	29.57	-8.78	20.79	43.50	-22.71	QP
3		192.4186	29.89	-9.52	20.37	43.50	-23.13	QP
4		330.1949	29.75	-5.42	24.33	46.00	-21.67	QP
5		411.8240	29.75	-3.78	25.97	46.00	-20.03	QP
6	*	925.7563	29.78	6.08	35.86	46.00	-10.14	QP

Remark:

Correct Factor = Cable loss + Antenna factor – Preamplifier;

Level = Reading Level + Correct Factor; Margin = Level - Limit;

3.2.8 TEST RESULTS (1GHZ~25GHZ)

GFSK

Polar (H/V)	Frequency (MHz)	Meter Reading (dBuV)	Pre-amplifier (dB)	Cable Loss (dB)	Antenna Factor (dB/m)	Emission Level (dBuV/m)	Limits (dBuV/m)	Margin (dB)	Detector Type
operation frequency:2402									
V	2402.00	114.43	52.16	2.78	27.41	92.46	114	-21.54	PK
V	2402.00	105.54	52.16	2.78	27.41	83.57	94	-10.43	AV
V	4804.00	78.12	51.74	3.08	31.25	60.71	74	-13.29	PK
V	4804.00	60.87	51.74	3.08	31.25	43.46	54	-10.54	AV
V	16132.00	55.43	51.56	7.36	41.57	52.8	74	-21.2	PK
H	2402.00	114.48	52.16	2.78	27.41	92.51	114	-21.49	PK
H	2402.00	105.23	52.16	2.78	27.41	83.26	94	-10.74	AV
H	4804.00	77.74	51.74	3.08	31.25	60.33	74	-13.67	PK
H	4804.00	60.45	51.74	3.08	31.25	43.04	54	-10.96	AV
H	16132.00	55.86	51.56	7.36	41.57	53.23	74	-20.77	PK
operation frequency:2440									
V	2440.00	113.27	52.11	2.82	27.47	91.45	114	-22.55	PK
V	2440.00	106.28	52.11	2.82	27.47	84.46	94	-9.54	AV
V	4880.00	78.56	51.77	3.03	31.34	61.16	74	-12.84	PK
V	4880.00	60.97	51.77	3.03	31.34	43.57	54	-10.43	AV
V	16132.00	55.21	51.56	7.36	41.57	52.58	74	-21.42	PK
H	2440.00	114.03	52.11	2.82	27.47	92.21	114	-21.79	PK
H	2440.00	105.14	52.11	2.82	27.47	83.32	94	-10.68	AV
H	4880.00	77.55	51.77	3.03	31.34	60.15	74	-13.85	PK
H	4880.00	59.87	51.77	3.03	31.34	42.47	54	-11.53	AV
H	16132.00	56.52	51.56	7.36	41.57	53.89	74	-20.11	PK
operation frequency:2480									
V	2480.00	114.28	52.23	2.86	27.44	92.35	114	-21.65	PK
V	2480.00	106.72	52.23	2.86	27.44	84.79	94	-9.21	AV
V	4960.00	79.10	51.69	3.05	31.39	61.85	74	-12.15	PK
V	4960.00	60.98	51.69	3.05	31.39	43.73	54	-10.27	AV
V	16132.00	54.75	51.56	7.36	41.57	52.12	74	-21.88	PK
H	2480.00	114.23	52.23	2.86	27.44	92.3	114	-21.7	PK
H	2480.00	106.35	52.23	2.86	27.44	84.42	94	-9.58	AV
H	4960.00	77.88	51.69	3.05	31.39	60.63	74	-13.37	PK
H	4960.00	60.45	51.69	3.05	31.39	43.2	54	-10.8	AV
H	16132.00	54.85	51.56	7.36	41.57	52.22	74	-21.78	PK

Remark:

1. Emission Level = Meter Reading + Antenna Factor + Cable Loss – Pre-amplifier,
   Margin= Emission Level - Limit
2. If peak below the average limit, the average emission was no test.
3. The amplitude of spurious emissions which are attenuated by more than 20dB below the permissible value has no need to be reported.

3.3 RADIATED BAND EMISSION MEASUREMENT

3.3.1 TEST REQUIREMENT:

FCC Part15 C Section 15.209 and 15.205

LIMITS OF RADIATED EMISSION MEASUREMENT (Above 1000MHz)

FREQUENCY (MHz)	Limit (dBuV/m) (at 3M)	
	PEAK	AVERAGE
Above 1000	74	54

Notes:

(1) The limit for radiated test was performed according to FCC PART 15C.

(2) The tighter limit applies at the band edges.

(3) Emission level (dBuV/m)=20log Emission level (uV/m).

Spectrum Parameter	Setting
Attenuation	Auto
Start Frequency	2300MHz
Stop Frequency	2520MHz
RB / VB (emission in restricted band)	1 MHz / 1 MHz for Peak, 1 MHz / 10Hz for Average

3.3.2 TEST PROCEDURE

Above 1GHz test procedure as below:

a. 1. The EUT was placed on the top of a rotating table 1.5 meters above the ground at a 3 meter camber. The table was rotated 360 degrees to determine the position of the highest radiation.

b. The EUT was set 3 meters away from the interference-receiving antenna, which was mounted on the top of a variable-height antenna tower.

c. The antenna height is varied from one meter to four meters above the ground to determine the maximum value of the field strength. Both horizontal and vertical polarizations of the antenna are set to make the measurement.

d. For each suspected emission, the EUT was arranged to its worst case and then the antenna was tuned to heights from 1 meter to 4 meters and the rota table was turned from 0 degrees to 360 degrees to find the maximum reading.

e. The test-receiver system was set to Peak Detect Function and Specified Bandwidth with Maximum Hold Mode.

f. If the emission level of the EUT in peak mode was 10dB lower than the limit specified, then testing could be stopped and the peak values of the EUT would be reported. Otherwise the emissions that did not have 10dB margin would be re-tested one by one using peak, quasi-peak or average method as specified and then reported in a data sheet.

g. Test the EUT in the lowest channel,the Highest channel

Note:

Both horizontal and vertical antenna polarities were tested
and performed pretest to three orthogonal axis. The worst case emissions were reported

3.3.3 DEVIATION FROM TEST STANDARD

No deviation

3.3.4 TEST SETUP

Radiated Emission Test-Up Frequency Above 1GHz

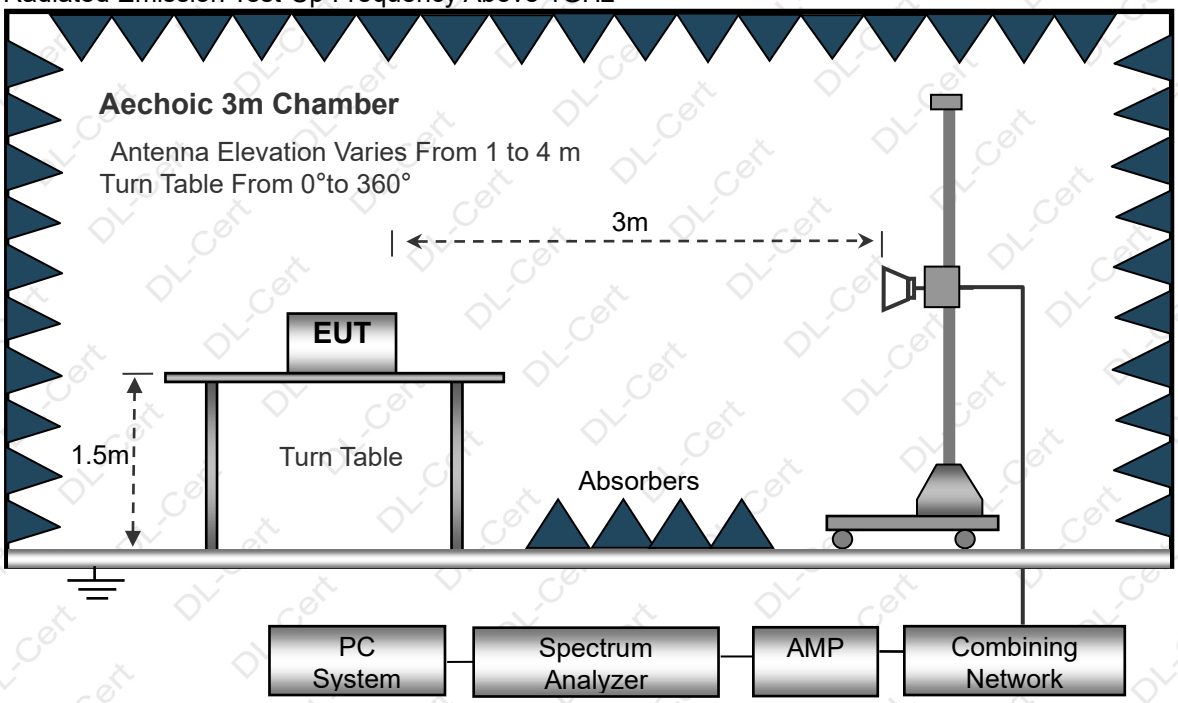

3.3.5 EUT OPERATING CONDITIONS

The EUT tested system was configured as the statements of 2.3 Unless otherwise a special operating condition is specified in the follows during the testing.

3.3.6 TEST RESULT

GFSK

Polar (H/V)	Frequency (MHz)	Meter Reading (dBuV)	Pre-amplifier (dB)	Cable Loss (dB)	Antenna Factor (dB/m)	Emission Level (dBuV/m)	Limits (dBuV/m)	Margin (dB)	Detector Type
operation frequency:2402									
V	2390.00	77.31	52.12	2.73	27.38	55.3	74	-18.7	PK
V	2390.00	66.24	52.12	2.73	27.38	44.23	54	-9.77	AV
V	2400.00	78.25	52.16	2.78	27.41	56.28	74	-17.72	PK
V	2400.00	65.99	52.16	2.78	27.41	44.02	54	-9.98	AV
H	2390.00	77.83	52.12	2.73	27.38	55.82	74	-18.18	PK
H	2390.00	66.16	52.12	2.73	27.38	44.15	54	-9.85	AV
H	2400.00	76.75	52.16	2.78	27.41	54.78	74	-19.22	PK
H	2400.00	66.13	52.16	2.78	27.41	44.16	54	-9.84	AV

Polar (H/V)	Frequency (MHz)	Meter Reading (dBuV)	Pre-amplifier (dB)	Cable Loss (dB)	Antenna Factor (dB/m)	Emission Level (dBuV/m)	Limits (dBuV/m)	Margin (dB)	Detector Type
operation frequency:2480									
V	2483.50	76.19	52.23	2.86	27.44	54.26	74	-19.74	PK
V	2483.50	67.20	52.23	2.86	27.44	45.27	54	-8.73	AV
V	2500.00	75.75	52.26	2.88	27.49	53.86	74	-20.14	PK
V	2500.00	66.05	52.26	2.88	27.49	44.16	54	-9.84	AV
H	2483.50	75.82	52.23	2.86	27.44	53.89	74	-20.11	PK
H	2483.50	65.49	52.23	2.86	27.44	43.56	54	-10.44	AV
H	2500.00	75.87	52.26	2.88	27.49	53.98	74	-20.02	PK
H	2500.00	66.98	52.26	2.88	27.49	45.09	54	-8.91	AV

Remark:

1. Emission Level = Meter Reading + Antenna Factor + Cable Loss – Pre-amplifier,
   Margin= Emission Level - Limit
2. If peak below the average limit, the average emission was no test.
3. The amplitude of spurious emissions which are attenuated by more than 20dB below the permissible value has no need to be reported.

4. BANDWIDTH TEST

4.1 APPLIED PROCEDURES / LIMIT

FCC Part15 (15.215) , Subpart C	
Section	Test Item
15.215	Bandwidth

4.1.1 TEST PROCEDURE

1. Set RBW = 30 kHz.
2. Set the video bandwidth (VBW) ≥RBW.
3. Detector = Peak.
4. Trace mode = max hold.
5. Sweep = auto couple.
6. Allow the trace to stabilize.
7. Measure the maximum width of the emission that is constrained by the frequencies associated with the two outermost amplitude points (upper and lower frequencies) that are attenuated by 20 dB relative to the maximum level measured in the fundamental emission.

4.1.2 DEVIATION FROM STANDARD

No deviation.

4.1.3 TEST SETUP

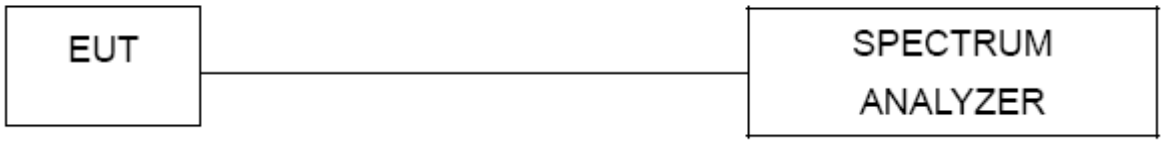

4.1.4 EUT OPERATION CONDITIONS

The EUT tested system was configured as the statements of 2.3 Unless otherwise a special operating condition is specified in the follows during the testing.

4.1.5 TEST RESULTS

Temperature:	25℃	Relative Humidity:	60%
Pressure:	1012 hPa	Test Voltage :	DC 3.7V
Test Mode :	TX Mode /CH00, CH19, CH39		

	Frequency (MHz)	20dB Bandwidth (MHz)	Result
GFSK	2402	1.167	Pass
	2440	1.166	Pass
	2480	1.145	Pass

GFSK

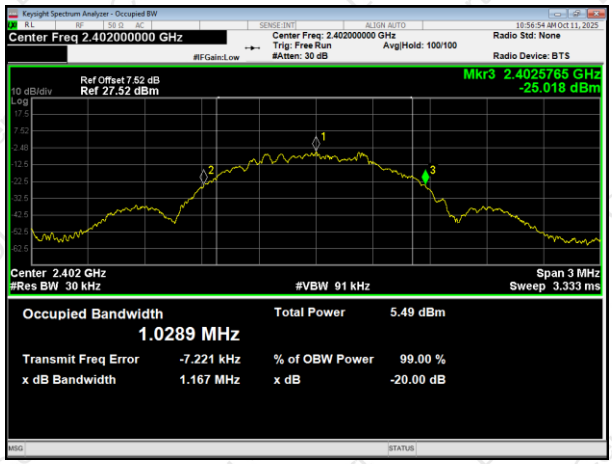

2402MHz

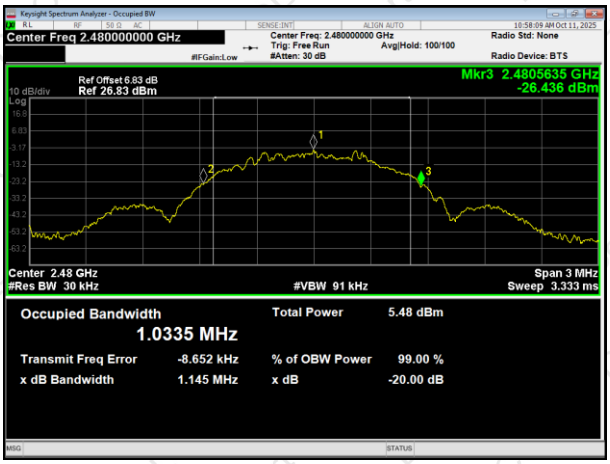

2480MHz

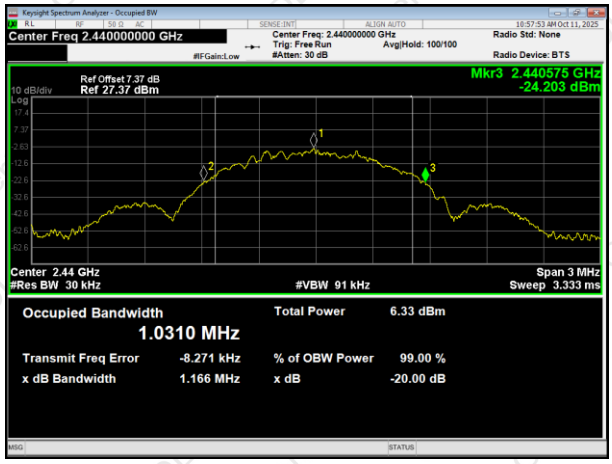

2440MHz

5. ANTENNA REQUIREMENT

5.1 STANDARD REQUIREMENT

15.203 requirement: For intentional device, according to 15.203: an intentional radiator shall be designed to ensure that no antenna other than that furnished by the responsible party shall be used with the device.

5.2 EUT ANTENNA

The EUT antenna is Internal antenna, It comply with the standard requirement.

6. TEST SEUUP PHOTO

Reference to the appendix I for details.

7. EUT PHOTO

Reference to the appendix II for details.

※※※※※ **END OF REPORT** ※※※※※