# FCC Part 15C Test Report
# FCC ID: 2BSVO-SF03-MINI

| | |
|---|---|
| Applicant: | Shantou Sofng Network Technology Co., Ltd |
| Address: | 2nd Floor, E26, Building 32, Yixin Garden, Chenghua Street, Chenghai District, Shantou City |
| Manufacturer: | Shantou Sofng Network Technology Co., Ltd |
| Address: | 2nd Floor, E26, Building 32, Yixin Garden, Chenghua Street, Chenghai District, Shantou City |
| EUT: | SF03mini bluetooth selfiestick |
| Trade Mark: | N/A |
| Model Number: | SF03-MINI |
| Date of Receipt: | Oct. 10, 2025 |
| Test Date: | Oct. 10, 2025 – Oct. 17, 2025 |
| Date of Report: | Oct. 17, 2025 |
| Prepared By: | Shenzhen DL Testing Technology Co., Ltd. |
| Address: | 101-201, Comprehensive Building, Tongzhou Electronics Longgang Factory Area, No.1 Baolong Fifth Road, Baolong Community, Baolong Street, Longgang District, Shenzhen, China |
| Applicable Standards: | FCC PART 15 C 15.249<br>ANSI C63.10-2020 |
| Test Result: | Pass |
| Report Number: | DLE-251010013R |

| | |
|---|---|
| Prepared (Test Engineer): | Ken Tan |
| Reviewer (Supervisor): | Jack Bu |
| Approved (Manager): | Jade Yang |

*This test report is based on a single evaluation of one sample of above mentioned products. It is not permitted to be duplicated in extracts without written approval of Shenzhen DL Testing Technology Co., Ltd.*

**Table of Contents** **Page**


1 . SUMMARY OF TEST RESULTS 4
1.1 MEASUREMENT UNCERTAINTY 4
2 . GENERAL INFORMATION 5
2.1 GENERAL DESCRIPTION OF EUT 5
2.2 DESCRIPTION OF TEST MODES 6
2.3 BLOCK DIGRAM SHOWING THE CONFIGURATION OF SYSTEM TESTED 6
2.4 DESCRIPTION OF SUPPORT UNITS(CONDUCTED MODE) 7
2.5 TABLE OF PARAMETERS OF TEST SOFTWARE SETTING 7
2.6 EQUIPMENTS LIST FOR ALL TEST ITEMS 8
3 . EMC EMISSION TEST 9
3.1 CONDUCTED EMISSION MEASUREMENT 9
3.1.1 POWER LINE CONDUCTED EMISSION LIMITS 9
3.1.2 TEST PROCEDURE 9
3.1.3 DEVIATION FROM TEST STANDARD 9
3.1.4 TEST SETUP 10
3.1.5 EUT OPERATING CONDITIONS 10
3.1.6 TEST RESULTS 10
3.2 RADIATED EMISSION MEASUREMENT 11
3.2.1 RADIATED EMISSION LIMITS 11
3.2.2 TEST PROCEDURE 12
3.2.3 DEVIATION FROM TEST STANDARD 12
3.2.4 TEST SETUP 12
3.2.5 EUT OPERATING CONDITIONS 13
3.2.6 TEST RESULTS (BETWEEN 9KHZ – 30 MHZ) 14
3.2.7 TEST RESULTS (BETWEEN 30MHZ – 1GHZ) 15
3.2.8 TEST RESULTS (1GHZ~25GHZ) 17
3.3 RADIATED BAND EMISSION MEASUREMENT 18
3.3.1 TEST REQUIREMENT: 18
3.3.2 TEST PROCEDURE 18
3.3.3 DEVIATION FROM TEST STANDARD 18
3.3.4 TEST SETUP 19
3.3.5 EUT OPERATING CONDITIONS 19
4 . BANDWIDTH TEST 21
4.1 APPLIED PROCEDURES / LIMIT 21
4.1.1 TEST PROCEDURE 21
4.1.2 DEVIATION FROM STANDARD 21
4.1.3 TEST SETUP 21
4.1.4 EUT OPERATION CONDITIONS 21

**Table of Contents** **Page**


4.1.5 TEST RESULTS 22

5 . ANTENNA REQUIREMENT 23

5.1 STANDARD REQUIREMENT 23

5.2 EUT ANTENNA 23

6 . TEST SEUUP PHOTO 23

7 . EUT PHOTO 23

## 1. SUMMARY OF TEST RESULTS

Test procedures according to the technical standards:

| FCC Part15 (15.249) , Subpart C | | | |
|---|---|---|---|
| Standard Section | Test Item | Judgment | Remark |
| 15.207 | Conducted Emission | N/A | |
| 15.205(a), 15.209(a) 15.249(a), 15.249(c) | Fundamental &Radiated Spurious Emission Measurement | PASS | |
| 15.249(d) | Band Edge Emission | PASS | |
| 15.215(c) | 20dB Bandwidth | PASS | |
| 15.203 | Antenna Requirement | PASS | |

NOTE:

(1)" N/A" denotes test is not applicable in this Test Report

Test lab: Shenzhen DL Testing Technology Co., Ltd.

Address: 101-201, Comprehensive Building, Tongzhou Electronics Longgang Factory Area, No.1 Baolong Fifth Road, Baolong Community, Baolong Street, Longgang District, Shenzhen, China

The test results presented in this report relate only to the object tested.

This report shall not be reproduced, except in full, without the written approval of the Issuing DL Testing Laboratory. The authenticity of this Test Report and its contents can be verified by contacting the DL Testing, responsible for this Test Report.

FCC Test Firm Registration Number: 854456
Designation Number: CN1307
IC Registered No.: 27485
CAB ID.: CN0118

### 1.1 MEASUREMENT UNCERTAINTY

The reported uncertainty of measurement **y ± U**, where expended uncertainty **U** is based on a standard uncertainty multiplied by a coverage factor of **k=2**,providing a level of confidence of approximately **95** %.

| No. | Item | Uncertainty |
|---|---|---|
| 1 | Conducted Emission Test | ±2.56dB |
| 2 | RF power,conducted | ±0.42dB |
| 3 | Spurious emissions,conducted | ±2.76dB |
| 4 | All emissions,radiated(<1G) | ±3.65dB |
| 5 | All emissions,radiated(>1G) | ±4.89dB |
| 6 | Temperature | ±0.5°C |
| 7 | Humidity | ±2% |
| 8 | 20dB Bandwidth | ±0.2MHz |

## 2. GENERAL INFORMATION

### 2.1 GENERAL DESCRIPTION OF EUT

| | |
|---|---|
| Product Name: | SF03mini bluetooth selfiestick |
| Trademark | N/A |
| Model No.: | SF03-MINI |
| Model Difference | N/A |
| Operation Frequency: | 2402~2480MHz |
| Channel numbers: | 40 Channels |
| Channel separation: | 2MHz |
| Modulation technology: | GFSK |
| Antenna Type: | Internal Antenna |
| Antenna gain: | 1dBi |
| Power supply: | DC 3V from battery |

Note:

1.For a more detailed features description, please refer to the manufacturer's specifications or the User's Manual.

2.The EUT's all information provided by client.

3.

| Channel List | | | | | |
|---|---|---|---|---|---|
| Channel | Frequency (MHz) | Channel | Frequency (MHz) | Channel | Frequency (MHz) |
| 00 | 2402 | 14 | 2430 | 27 | 2456 |
| 01 | 2404 | 15 | 2432 | 28 | 2458 |
| 02 | 2406 | 16 | 2434 | 29 | 2460 |
| 03 | 2408 | 17 | 2436 | 30 | 2462 |
| 04 | 2410 | 18 | 2438 | 31 | 2464 |
| 05 | 2412 | 19 | 2440 | 32 | 2466 |
| 06 | 2414 | 20 | 2442 | 33 | 2468 |
| 07 | 2416 | 21 | 2444 | 34 | 2470 |
| 08 | 2418 | 22 | 2446 | 35 | 2472 |
| 09 | 2420 | 23 | 2448 | 36 | 2474 |
| 10 | 2422 | 24 | 2450 | 37 | 2476 |
| 11 | 2424 | 25 | 2452 | 38 | 2478 |
| 12 | 2426 | 26 | 2454 | 39 | 2480 |
| 13 | 2428 | / | / | / | / |

## 2.2 DESCRIPTION OF TEST MODES

To investigate the maximum EMI emission characteristics generates from EUT, the test system was pre-scanning tested base on the consideration of following EUT operation mode or test configuration mode which possible have effect on EMI emission level. Each of these EUT operation mode(s) or test configuration mode(s) mentioned above was evaluated respectively.

| Pretest Mode | Description | |
|---|---|---|
| Mode 1 | CH00 | GFSK |
| Mode 2 | CH19 | |
| Mode 3 | CH39 | |
| Mode 4 | Link Mode | |

| For Radiated Emission | | |
|---|---|---|
| Final Test Mode | Description | |
| Mode 1 | CH00 | GFSK |
| Mode 2 | CH19 | |
| Mode 3 | CH39 | |
| Mode 4 | Link Mode | |

Note:

(1) The measurements are performed at the highest, middle, lowest available channels.
(2) A new fully charged battery was used for testing during the test.

## 2.3 BLOCK DIGRAM SHOWING THE CONFIGURATION OF SYSTEM TESTED

Radiated Spurious Emission Test

E-1
EUT

## 2.4 DESCRIPTION OF SUPPORT UNITS(CONDUCTED MODE)

The EUT has been tested as an independent unit together with other necessary accessories or support units. The following support units or accessories were used to form a representative test configuration during the tests.

| Item | Equipment | Model/Type No. | Series No. | Note |
|---|---|---|---|---|
| E-1 | SF03mini bluetooth selfiestick | SF03-MINI | N/A | EUT |
| | | | | |
| | | | | |

| Item | Shielded Type | Ferrite Core | Length | Note |
|---|---|---|---|---|
| | | | | |

Note:

(1) For detachable type I/O cable should be specified the length in cm in『Length』column.

## 2.5 TABLE OF PARAMETERS OF TEST SOFTWARE SETTING

During testing, channel & power controlling software provided by the customer was used to control the operating channel as well as the output power level. The RF output power selection is for the setting of RF output power expected by the customer and is going to be fixed on the end product.

| Test software Version | Test program: BK RF Test_V1.2 | | |
|---|---|---|---|
| Frequency | 2402 MHz | 2440 MHz | 2480 MHz |
| Power Setting of Softwave | 10 | 10 | 10 |

## 2.6 EQUIPMENTS LIST FOR ALL TEST ITEMS

Radiation test, Band-edge test and 20db bandwidth test equipment

| Item | Equipment | Manufacturer | Type No. | Serial No. | Last calibration | Calibrated until |
|---|---|---|---|---|---|---|
| 1 | Spectrum Analyzer (9kHz-26.5GHz) | Agilent | E4408B | MY50140780 | Nov. 01, 2024 | Oct. 31, 2025 |
| 2 | Test Receiver (9kHz-7GHz) | R&S | ESRP7 | 101393 | Nov. 01, 2024 | Oct. 31, 2025 |
| 3 | Bilog Antenna (30MHz-1GHz) | R&S | VULB9162 | 00306 | Nov. 01, 2024 | Oct. 31, 2025 |
| 4 | Horn Antenna (1GHz-18GHz) | Schwarzbeck | BBHA9120D | 02139 | Nov. 01, 2024 | Oct. 31, 2025 |
| 5 | Horn Antenna (18GHz-40GHz) | A.H. Systems | SAS-574 | 588 | Nov. 01, 2024 | Oct. 31, 2025 |
| 6 | Amplifier (9KHz-6GHz) | Schwarzbeck | BBV9743B | 00153 | Nov. 01, 2024 | Oct. 31, 2025 |
| 7 | Amplifier (1GHz-18GHz) | EMEC | EM01G8GA | 00270 | Nov. 01, 2024 | Oct. 31, 2025 |
| 8 | Amplifier (18GHz-40GHz) | Quanjuda | DLE-161 | 97 | Nov. 01, 2024 | Oct. 31, 2025 |
| 9 | Loop Antenna (9KHz-30MHz) | Schwarzbeck | FMZB1519B | 00014 | Nov. 01, 2024 | Oct. 31, 2025 |
| 10 | RF cables1 (9kHz-1GHz) | ChengYu | 966 | 004 | Nov. 01, 2024 | Oct. 31, 2025 |
| 11 | RF cables2 (1GHz-40GHz) | ChengYu | 966 | 003 | Nov. 01, 2024 | Oct. 31, 2025 |
| 12 | Antenna connector | Florida RF Labs | N/A | RF 01# | Nov. 01, 2024 | Oct. 31, 2025 |
| 13 | Power probe | KEYSIGHT | U2021XA | MY55210018 | Nov. 01, 2024 | Oct. 31, 2025 |
| 14 | Signal Analyzer 9kHz-26.5GHz | Agilent | N9020A | MY55370280 | Nov. 01, 2024 | Oct. 31, 2025 |
| 15 | Test Receiver 20kHz-40GHz | R&S | ESU 40 | 100376 | Nov. 01, 2024 | Oct. 31, 2025 |
| 16 | D.C. Power Supply | LongWei | PS-305D | 010964729 | Nov. 01, 2024 | Oct. 31, 2025 |
| 17 | Temperature & humidity chamber | Changfeng | CF-150-40-P | CF170802-01 | Nov. 01, 2024 | Oct. 31, 2025 |

Conduction Test equipment

| Item | Equipment | Manufacturer | Type No. | Serial No. | Last calibration | Calibrated until |
|---|---|---|---|---|---|---|
| 1 | 843 Shielded Room | YIHENG | 843 Room | 843 | Nov. 05, 2023 | Nov. 04, 2026 |
| 2 | EMI Receiver | R&S | ESR | 101421 | Nov. 01, 2024 | Oct. 31, 2025 |
| 3 | LISN | R&S | ENV216 | 102417 | Nov. 01, 2024 | Oct. 31, 2025 |
| 4 | 843 Cable 1# | ChengYu | CE Cable | 001 | Nov. 01, 2024 | Oct. 31, 2025 |

Other

| Item | Name | Manufacturer | Model | Software version |
|---|---|---|---|---|
| 1 | EMC Conduction Test System | FALA | EZ_EMC | EMC-CON 3A1.1 |
| 2 | EMC radiation test system | FALA | EZ_EMC | FA-03A2 |
| 3 | RF test system | MAIWEI | MTS8310 | 2.0.0.0 |
| 4 | RF communication test system | MAIWEI | MTS8200 | 2.0.0.0 |

## 3. EMC EMISSION TEST

### 3.1 CONDUCTED EMISSION MEASUREMENT

#### 3.1.1 POWER LINE CONDUCTED EMISSION Limits (Frequency Range 150KHz-30MHz)

| FREQUENCY (MHz) | Limit (dBuV) | | Standard |
|---|---|---|---|
| | Quasi-peak | Average | |
| 0.15 -0.5 | 66 - 56 * | 56 - 46 * | FCC |
| 0.50 -5.0 | 56.00 | 46.00 | FCC |
| 5.0 -30.0 | 60.00 | 50.00 | FCC |

Note:

(1) The tighter limit applies at the band edges.

(2) The limit of " * " marked band means the limitation decreases linearly with the logarithm of the frequency in the range.

The following table is the setting of the receiver

| Receiver Parameters | Setting |
|---|---|
| Attenuation | 10 dB |
| Start Frequency | 0.15 MHz |
| Stop Frequency | 30 MHz |
| IF Bandwidth | 9 kHz |

#### 3.1.2 TEST PROCEDURE

a. The EUT was placed 0.8 meters from the horizontal ground plane with EUT being connected to the power mains through a line impedance stabilization network (LISN). All other support equipments powered from additional LISN(s). The LISN provide 50 Ohm/ 50uH of coupling impedance for the measuring instrument.

b. Interconnecting cables that hang closer than 40 cm to the ground plane shall be folded back and forth in the center forming a bundle 30 to 40 cm long.

c. I/O cables that are not connected to a peripheral shall be bundled in the center. The end of the cable may be terminated, if required, using the correct terminating impedance. The overall length shall not exceed 1 m.

d. LISN at least 80 cm from nearest part of EUT chassis.

e. For the actual test configuration, please refer to the related Item –EUT Test Photos.

#### 3.1.3 DEVIATION FROM TEST STANDARD

No deviation

### 3.1.4 TEST SETUP

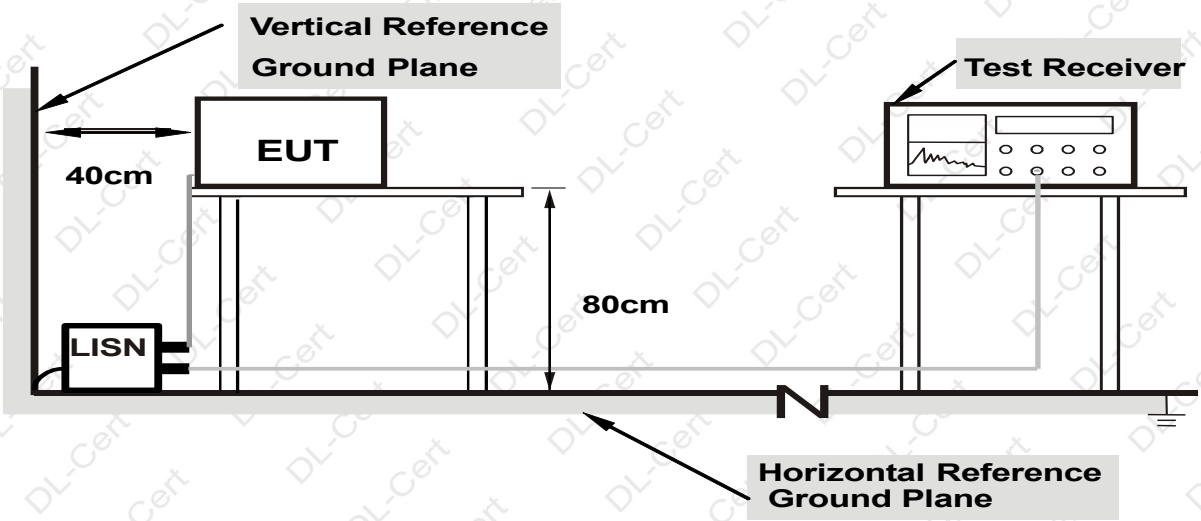


**Note: 1.Support units were connected to second LISN.**
**2.Both of LISNs (AMN) are 80 cm from EUT and at least 80 from other units and other metal planes**

### 3.1.5 EUT OPERATING CONDITIONS

The EUT was configured for testing in a typical fashion (as a customer would normally use it). The EUT has been programmed to continuously transmit during test. This operating condition was tested and used to collect the included data.

### 3.1.6 TEST RESULTS

The EUT is powered by DC, no requirements for this item.

## 3.2 RADIATED EMISSION MEASUREMENT

### 3.2.1 RADIATED EMISSION LIMITS (Frequency Range 9kHz-1000MHz)

In case the emission fall within the restricted band specified on 15.205(a), then the 15.209(a) limit in the table below has to be followed.

| Frequency (MHz) | Field Strength (micorvolts/meter) | Measurement Distance (meters) |
|---|---|---|
| 0.009~0.490 | 2400/F(KHz) | 300 |
| 0.490~1.705 | 24000/F(KHz) | 30 |
| 1.705~30.0 | 30 | 30 |
| 30~88 | 100 | 3 |
| 88~216 | 150 | 3 |
| 216~960 | 200 | 3 |
| Above 960 | 500 | 3 |

The field strength of emissions from intentional radiators operated within these frequency bands shall comply with the following:

| Fundamental Frequency | Field Strength of Fundamental (millivolts/meter) | Field Strength of Harmonics (microvolts/meter) |
|---|---|---|
| 902 - 928 MHz | 50 | 500 |
| 2400 - 2483.5 MHz | 50 | 500 |
| 5725 - 5875 MHz | 50 | 500 |
| 24.0 - 24.25 GHz | 250 | 2500 |

LIMITS OF RADIATED EMISSION MEASUREMENT (Above 1000MHz)

| FREQUENCY (MHz) | Limit (dBuV/m) (at 3M) | |
|---|---|---|
| | PEAK | AVERAGE |
| Above 1000 | 74 | 54 |

Notes:

(1) The limit for radiated test was performed according to FCC PART 15C.

(2) The tighter limit applies at the band edges.

(3) Emission level (dBuV/m)=20log Emission level (uV/m).

(4) Emissions radiated outside of the specified frequency bands, except for harmonics, shall be attenuated by at least 50 dB below the level of the fundamental or to the general radiated emission limits in § 15.209, whichever is the lesser attenuation.

Receiver setup:

| Frequency | Detector | RBW | VBW | Value |
|---|---|---|---|---|
| 9KHz-150KHz | Quasi-peak | 200Hz | 600Hz | Quasi-peak |
| 150KHz-30MHz | Quasi-peak | 9KHz | 30KHz | Quasi-peak |
| 30MHz-1GHz | Quasi-peak | 100KHz | 300KHz | Quasi-peak |
| Above 1GHz | Peak | 1MHz | 3MHz | Peak |

| | Peak | 1MHz | 10Hz | Average |
|---|---|---|---|---|

### 3.2.2 TEST PROCEDURE

Below 1GHz test procedure as below:

a. The EUT was placed on the top of a rotating table 0.8 meters above the ground at a 3 meter semi-anechoic camber. The table was rotated 360 degrees to determine the position of the highest radiation.
b. The EUT was set 3 meters away from the interference-receiving antenna, which was mounted on the top of a variable-height antenna tower.
c. The antenna height is varied from one meter to four meters above the ground to determine the maximum value of the field strength. Both horizontal and vertical polarizations of the antenna are set to make the measurement.
d. For each suspected emission, the EUT was arranged to its worst case and then the antenna was tuned to heights from 1 meter to 4 meters (for the test frequency of below 30MHz, the antenna was tuned to heights 1 meter) and the rotatable table was turned from 0 degrees to 360 degrees to find the maximum reading.
e. The test-receiver system was set to Peak Detect Function and Specified Bandwidth with Maximum Hold Mode.
f. If the emission level of the EUT in peak mode was 10dB lower than the limit specified, then testing could be stopped and the peak values of the EUT would be reported. Otherwise the emissions that did not have 10dB margin would be re-tested one by one using peak, quasi-peak or average method as specified and then reported in a data sheet.

Above 1GHz test procedure as below:

g. The EUT was placed on the top of a rotating table 1.5 meters above the ground at a 3 meter semi-anechoic camber.
h. Test the EUT in the lowest channel ,the middle channel ,the Highest channel

Note:

Both horizontal and vertical antenna polarities were tested
and performed pretest to three orthogonal axis. The worst case emissions were reported

### 3.2.3 DEVIATION FROM TEST STANDARD

No deviation

### 3.2.4 TEST SETUP

（A）Radiated Emission Test-Up Frequency Below 30MHz

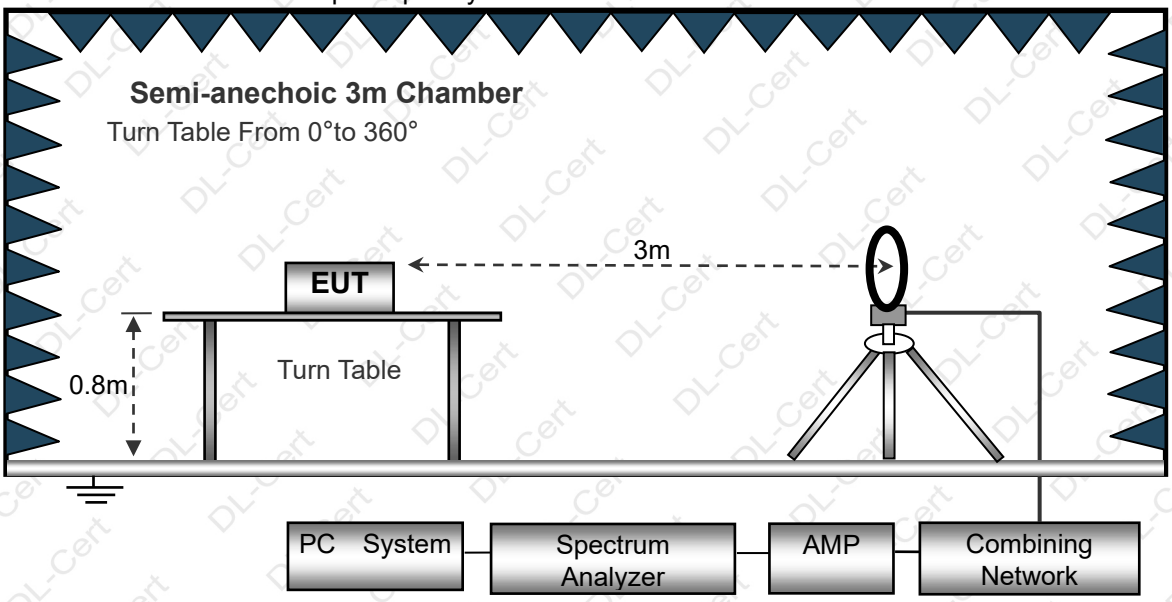

（B）Radiated Emission Test-Up Frequency 30MHz~1GHz

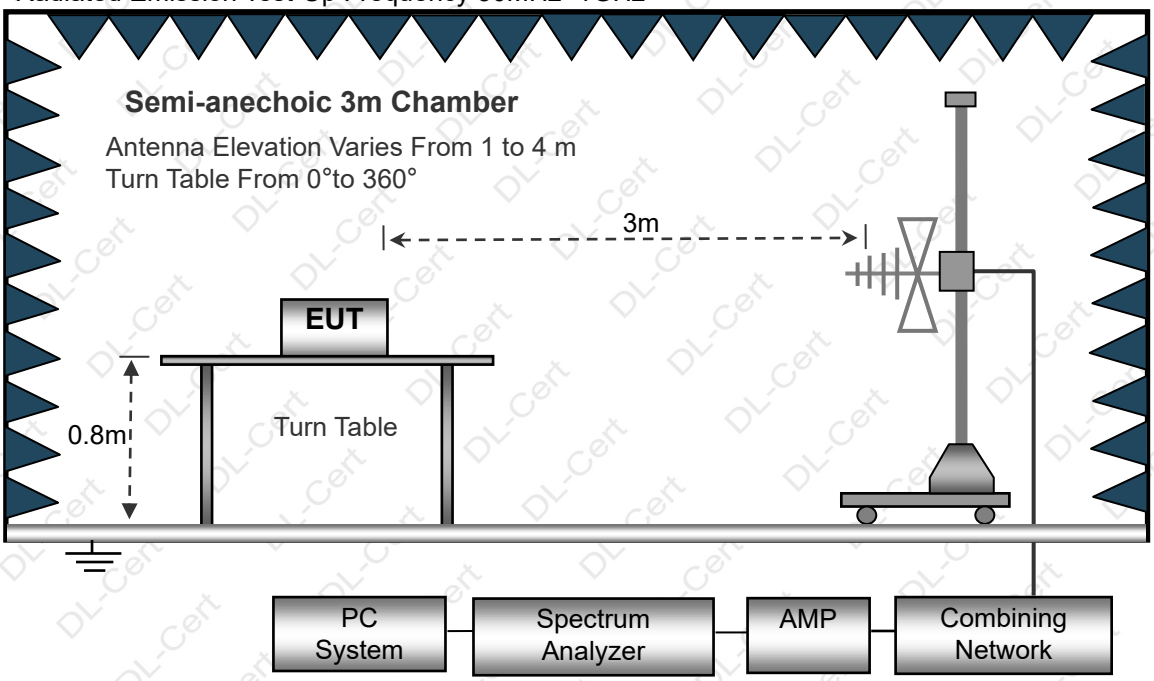


（C）Radiated Emission Test-Up Frequency Above 1GHz

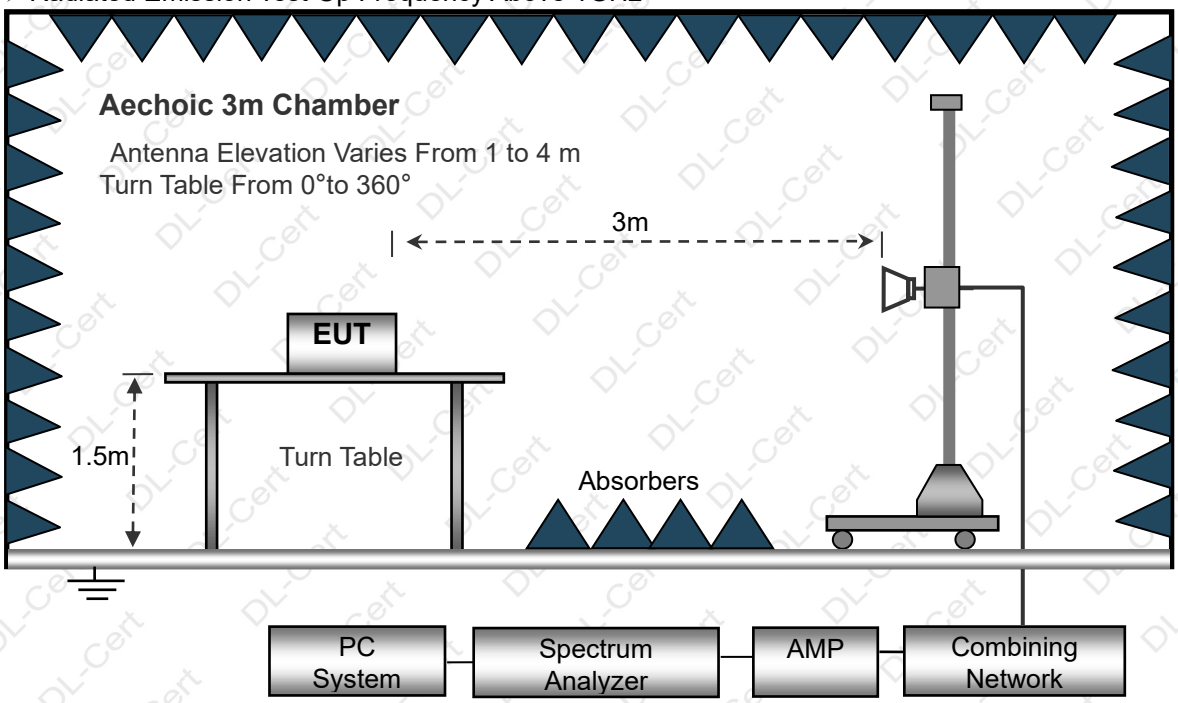


### 3.2.5 EUT OPERATING CONDITIONS

The EUT tested system was configured as the statements of 2.3 Unless otherwise a special operating condition is specified in the follows during the testing.

### 3.2.6 TEST RESULTS (BETWEEN 9KHZ – 30 MHZ)

| | | | |
|---|---|---|---|
| Temperature: | 20℃ | Relative Humidtity: | 48% |
| Pressure: | 1010 hPa | Test Voltage : | DC 3V |
| Test Mode : | Mode 4 | Polarization : | -- |

| Freq. | Reading | Limit | Margin | State |
|---|---|---|---|---|
| (MHz) | (dBuV/m) | (dBuV/m) | (dB) | P/F |
| -- | -- | -- | -- | PASS |
| -- | -- | -- | -- | PASS |

**NOTE:**

The amplitude of spurious emissions which are attenuated by more than 20dB below the permissible value has no need to be reported.
Distance extrapolation factor =40 log (specific distance/test distance)(dB);
Limit line = specific limits(dBuv) + distance extrapolation factor.

### 3.2.7 TEST RESULTS (BETWEEN 30MHZ – 1GHZ)

| | | | |
|---|---|---|---|
| Temperature: | 26℃ | Relative Humidity: | 54% |
| Pressure: | 1010 hPa | Polarization : | Horizontal |
| Test Voltage : | DC 3V | | |
| Test Mode : | Mode 4 | | |

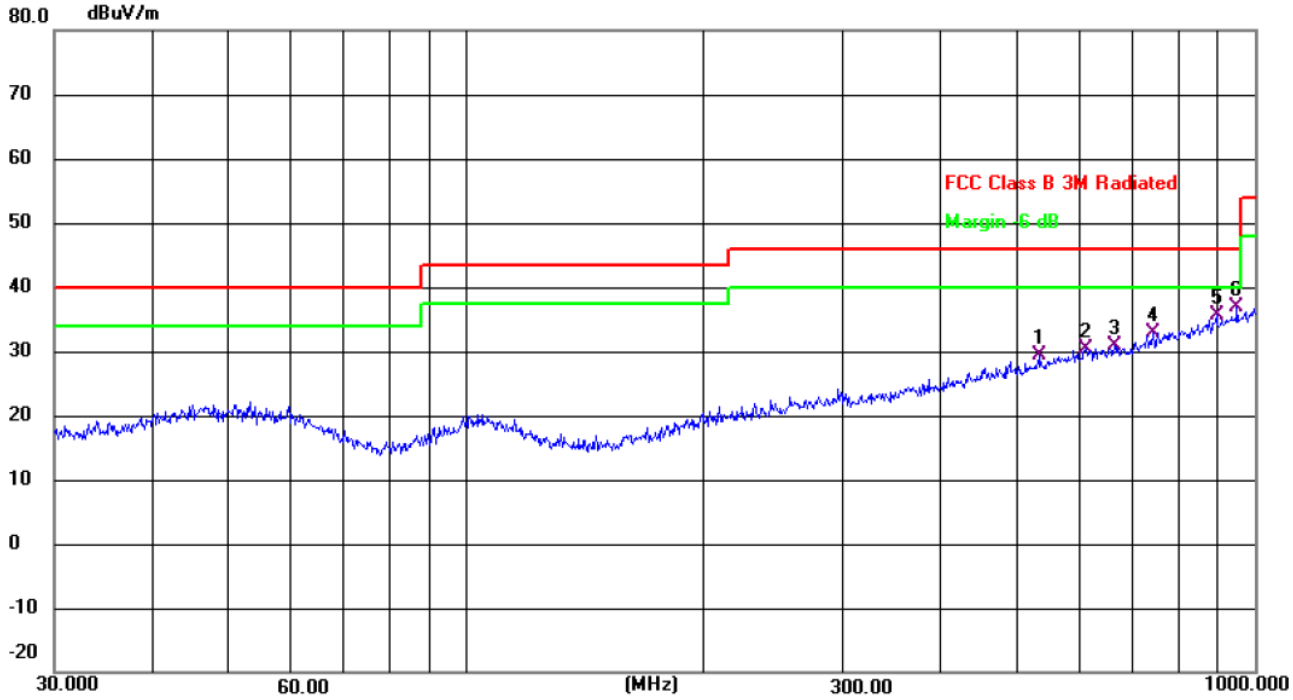


| No. | Mk. | Freq. | Reading Level | Correct Factor | Measure-ment | Limit | Margin | |
|---|---|---|---|---|---|---|---|---|
| | | MHz | dBuV | dB/m | dBuV/m | dBuV/m | dB | Detector |
| 1 | | 533.8321 | 29.98 | -0.56 | 29.42 | 46.00 | -16.58 | QP |
| 2 | | 609.9217 | 29.19 | 1.13 | 30.32 | 46.00 | -15.68 | QP |
| 3 | | 663.4729 | 29.17 | 1.77 | 30.94 | 46.00 | -15.06 | QP |
| 4 | | 742.2587 | 29.91 | 2.94 | 32.85 | 46.00 | -13.15 | QP |
| 5 | | 893.8567 | 30.39 | 5.21 | 35.60 | 46.00 | -10.40 | QP |
| 6 | * | 948.7610 | 31.43 | 5.51 | 36.94 | 46.00 | -9.06 | QP |

Remark:

Correct Factor = Cable loss + Antenna factor – Preamplifier;

Level = Reading Level + Correct Factor; Margin = Level - Limit;

| | | | |
|---|---|---|---|
| Temperature: | 26℃ | Relative Humidity: | 54% |
| Pressure: | 1010 hPa | Polarization : | Vertical |
| Test Voltage : | DC 3V | | |
| Test Mode : | Mode 4 | | |

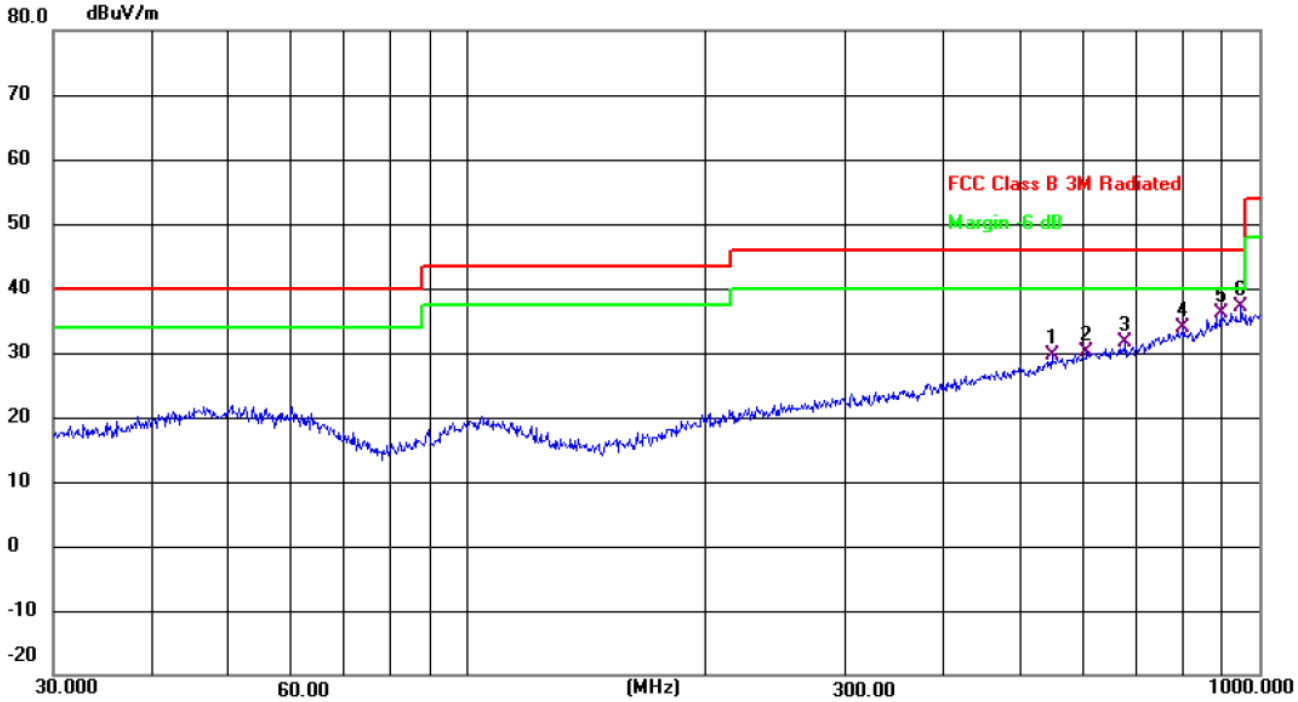


| No. | Mk. | Freq. | Reading Level | Correct Factor | Measure-ment | Limit | Margin | |
|---|---|---|---|---|---|---|---|---|
| | | MHz | dBuV | dB/m | dBuV/m | dBuV/m | dB | Detector |
| 1 | | 547.0977 | 29.73 | -0.18 | 29.55 | 46.00 | -16.45 | QP |
| 2 | | 605.6592 | 29.11 | 0.95 | 30.06 | 46.00 | -15.94 | QP |
| 3 | | 677.5798 | 30.04 | 1.54 | 31.58 | 46.00 | -14.42 | QP |
| 4 | | 801.7863 | 29.90 | 4.01 | 33.91 | 46.00 | -12.09 | QP |
| 5 | | 893.8567 | 31.02 | 5.21 | 36.23 | 46.00 | -9.77 | QP |
| 6 | * | 948.7610 | 31.52 | 5.51 | 37.03 | 46.00 | -8.97 | QP |

Remark:

Correct Factor = Cable loss + Antenna factor – Preamplifier;

Level = Reading Level + Correct Factor; Margin = Level - Limit;

### 3.2.8 TEST RESULTS (1GHZ~25GHZ)

GFSK

| Polar (H/V) | Frequency (MHz) | Meter Reading (dBuV) | Pre-amplifier (dB) | Cable Loss (dB) | Antenna Factor (dB/m) | Emission Level (dBuV/m) | Limits (dBuV/m) | Margin (dB) | Detector Type |
|---|---|---|---|---|---|---|---|---|---|
| **operation frequency:2402** | | | | | | | | | |
| V | 2402.00 | 114.57 | 52.16 | 2.78 | 27.41 | 92.6 | 114 | -21.4 | PK |
| V | 2402.00 | 105.7 | 52.16 | 2.78 | 27.41 | 83.73 | 94 | -10.27 | AV |
| V | 4804.00 | 78.37 | 51.74 | 3.08 | 31.25 | 60.96 | 74 | -13.04 | PK |
| V | 4804.00 | 61.17 | 51.74 | 3.08 | 31.25 | 43.76 | 54 | -10.24 | AV |
| V | 16132.00 | 55.74 | 51.56 | 7.36 | 41.57 | 53.11 | 74 | -20.89 | PK |
| H | 2402.00 | 114.62 | 52.16 | 2.78 | 27.41 | 92.65 | 114 | -21.35 | PK |
| H | 2402.00 | 105.4 | 52.16 | 2.78 | 27.41 | 83.43 | 94 | -10.57 | AV |
| H | 4804.00 | 77.99 | 51.74 | 3.08 | 31.25 | 60.58 | 74 | -13.42 | PK |
| H | 4804.00 | 60.75 | 51.74 | 3.08 | 31.25 | 43.34 | 54 | -10.66 | AV |
| H | 16132.00 | 56.17 | 51.56 | 7.36 | 41.57 | 53.54 | 74 | -20.46 | PK |
| **operation frequency:2440** | | | | | | | | | |
| V | 2440.00 | 113.41 | 52.11 | 2.82 | 27.47 | 91.59 | 114 | -22.41 | PK |
| V | 2440.00 | 106.44 | 52.11 | 2.82 | 27.47 | 84.62 | 94 | -9.38 | AV |
| V | 4880.00 | 78.81 | 51.77 | 3.03 | 31.34 | 61.41 | 74 | -12.59 | PK |
| V | 4880.00 | 61.27 | 51.77 | 3.03 | 31.34 | 43.87 | 54 | -10.13 | AV |
| V | 16132.00 | 55.52 | 51.56 | 7.36 | 41.57 | 52.89 | 74 | -21.11 | PK |
| H | 2440.00 | 114.17 | 52.11 | 2.82 | 27.47 | 92.35 | 114 | -21.65 | PK |
| H | 2440.00 | 105.31 | 52.11 | 2.82 | 27.47 | 83.49 | 94 | -10.51 | AV |
| H | 4880.00 | 77.8 | 51.77 | 3.03 | 31.34 | 60.4 | 74 | -13.6 | PK |
| H | 4880.00 | 60.17 | 51.77 | 3.03 | 31.34 | 42.77 | 54 | -11.23 | AV |
| H | 16132.00 | 56.83 | 51.56 | 7.36 | 41.57 | 54.2 | 74 | -19.8 | PK |
| **operation frequency:2480** | | | | | | | | | |
| V | 2480.00 | 114.42 | 52.23 | 2.86 | 27.44 | 92.49 | 114 | -21.51 | PK |
| V | 2480.00 | 106.88 | 52.23 | 2.86 | 27.44 | 84.95 | 94 | -9.05 | AV |
| V | 4960.00 | 79.34 | 51.69 | 3.05 | 31.39 | 62.09 | 74 | -11.91 | PK |
| V | 4960.00 | 61.28 | 51.69 | 3.05 | 31.39 | 44.03 | 54 | -9.97 | AV |
| V | 16132.00 | 55.07 | 51.56 | 7.36 | 41.57 | 52.44 | 74 | -21.56 | PK |
| H | 2480.00 | 114.37 | 52.23 | 2.86 | 27.44 | 92.44 | 114 | -21.56 | PK |
| H | 2480.00 | 106.51 | 52.23 | 2.86 | 27.44 | 84.58 | 94 | -9.42 | AV |
| H | 4960.00 | 78.13 | 51.69 | 3.05 | 31.39 | 60.88 | 74 | -13.12 | PK |
| H | 4960.00 | 60.75 | 51.69 | 3.05 | 31.39 | 43.5 | 54 | -10.5 | AV |
| H | 16132.00 | 55.17 | 51.56 | 7.36 | 41.57 | 52.54 | 74 | -21.46 | PK |

**Remark:**

1. Emission Level = Meter Reading + Antenna Factor + Cable Loss – Pre-amplifier,
   Margin= Emission Level - Limit
2. If peak below the average limit, the average emission was no test.
3. The amplitude of spurious emissions which are attenuated by more than 20dB below the permissible value has no need to be reported.

## 3.3 RADIATED BAND EMISSION MEASUREMENT

### 3.3.1 TEST REQUIREMENT:

FCC Part15 C Section 15.209 and 15.205

LIMITS OF RADIATED EMISSION MEASUREMENT (Above 1000MHz)

| FREQUENCY (MHz) | Limit (dBuV/m) (at 3M) | |
|---|---|---|
| | PEAK | AVERAGE |
| Above 1000 | 74 | 54 |

Notes:

(1) The limit for radiated test was performed according to FCC PART 15C.

(2) The tighter limit applies at the band edges.

(3) Emission level (dBuV/m)=20log Emission level (uV/m).

| Spectrum Parameter | Setting |
|---|---|
| Attenuation | Auto |
| Start Frequency | 2300MHz |
| Stop Frequency | 2520MHz |
| RB / VB (emission in restricted band) | 1 MHz / 1 MHz for Peak, 1 MHz / 10Hz for Average |

### 3.3.2 TEST PROCEDURE

Above 1GHz test procedure as below:

a. 1. The EUT was placed on the top of a rotating table 1.5 meters above the ground at a 3 meter camber. The table was rotated 360 degrees to determine the position of the highest radiation.

b. The EUT was set 3 meters away from the interference-receiving antenna, which was mounted on the top of a variable-height antenna tower.

c. The antenna height is varied from one meter to four meters above the ground to determine the maximum value of the field strength. Both horizontal and vertical polarizations of the antenna are set to make the measurement.

d. For each suspected emission, the EUT was arranged to its worst case and then the antenna was tuned to heights from 1 meter to 4 meters and the rota table was turned from 0 degrees to 360 degrees to find the maximum reading.

e. The test-receiver system was set to Peak Detect Function and Specified Bandwidth with Maximum Hold Mode.

f. If the emission level of the EUT in peak mode was 10dB lower than the limit specified, then testing could be stopped and the peak values of the EUT would be reported. Otherwise the emissions that did not have 10dB margin would be re-tested one by one using peak, quasi-peak or average method as specified and then reported in a data sheet.

g. Test the EUT in the lowest channel,the Highest channel

Note:

Both horizontal and vertical antenna polarities were tested
and performed pretest to three orthogonal axis. The worst case emissions were reported

### 3.3.3 DEVIATION FROM TEST STANDARD

No deviation

### 3.3.4 TEST SETUP

Radiated Emission Test-Up Frequency Above 1GHz

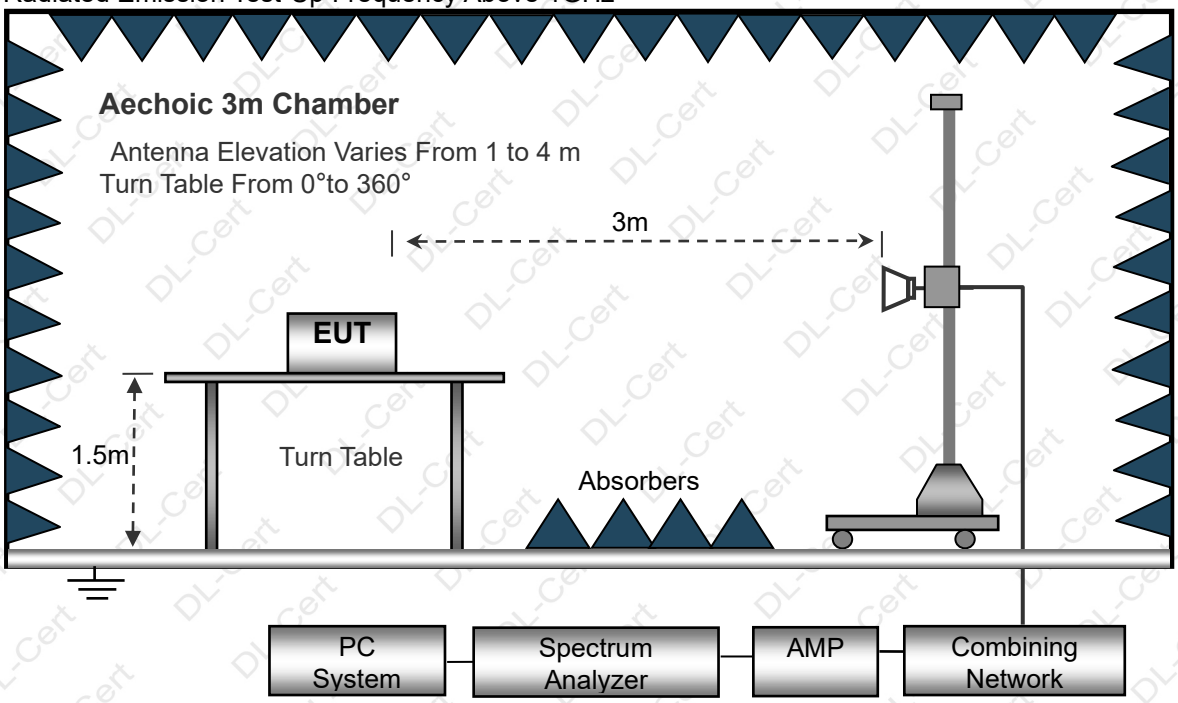


### 3.3.5 EUT OPERATING CONDITIONS

The EUT tested system was configured as the statements of 2.3 Unless otherwise a special operating condition is specified in the follows during the testing.

### 3.3.6 TEST RESULT

GFSK

| Polar (H/V) | Frequency (MHz) | Meter Reading (dBuV) | Pre-amplifier (dB) | Cable Loss (dB) | Antenna Factor (dB/m) | Emission Level (dBuV/m) | Limits (dBuV/m) | Margin (dB) | Detector Type |
|---|---|---|---|---|---|---|---|---|---|
| operation frequency:2402 | | | | | | | | | |
| V | 2390.00 | 77.07 | 52.12 | 2.73 | 27.38 | 55.06 | 74 | -18.94 | PK |
| V | 2390.00 | 66.08 | 52.12 | 2.73 | 27.38 | 44.07 | 54 | -9.93 | AV |
| V | 2400.00 | 78.01 | 52.16 | 2.78 | 27.41 | 56.04 | 74 | -17.96 | PK |
| V | 2400.00 | 65.83 | 52.16 | 2.78 | 27.41 | 43.86 | 54 | -10.14 | AV |
| H | 2390.00 | 77.59 | 52.12 | 2.73 | 27.38 | 55.58 | 74 | -18.42 | PK |
| H | 2390.00 | 66 | 52.12 | 2.73 | 27.38 | 43.99 | 54 | -10.01 | AV |
| H | 2400.00 | 76.52 | 52.16 | 2.78 | 27.41 | 54.55 | 74 | -19.45 | PK |
| H | 2400.00 | 65.97 | 52.16 | 2.78 | 27.41 | 44 | 54 | -10 | AV |

| Polar (H/V) | Frequency (MHz) | Meter Reading (dBuV) | Pre-amplifier (dB) | Cable Loss (dB) | Antenna Factor (dB/m) | Emission Level (dBuV/m) | Limits (dBuV/m) | Margin (dB) | Detector Type |
|---|---|---|---|---|---|---|---|---|---|
| operation frequency:2480 | | | | | | | | | |
| V | 2483.50 | 75.96 | 52.23 | 2.86 | 27.44 | 54.03 | 74 | -19.97 | PK |
| V | 2483.50 | 67.03 | 52.23 | 2.86 | 27.44 | 45.1 | 54 | -8.9 | AV |
| V | 2500.00 | 75.52 | 52.26 | 2.88 | 27.49 | 53.63 | 74 | -20.37 | PK |
| V | 2500.00 | 65.89 | 52.26 | 2.88 | 27.49 | 44 | 54 | -10 | AV |
| H | 2483.50 | 75.59 | 52.23 | 2.86 | 27.44 | 53.66 | 74 | -20.34 | PK |
| H | 2483.50 | 65.33 | 52.23 | 2.86 | 27.44 | 43.4 | 54 | -10.6 | AV |
| H | 2500.00 | 75.64 | 52.26 | 2.88 | 27.49 | 53.75 | 74 | -20.25 | PK |
| H | 2500.00 | 66.81 | 52.26 | 2.88 | 27.49 | 44.92 | 54 | -9.08 | AV |

**Remark:**

1. Emission Level = Meter Reading + Antenna Factor + Cable Loss – Pre-amplifier,
   Margin= Emission Level - Limit
2. If peak below the average limit, the average emission was no test.
3. The amplitude of spurious emissions which are attenuated by more than 20dB below the permissible value has no need to be reported.

## 4. BANDWIDTH TEST

### 4.1 APPLIED PROCEDURES / LIMIT

| FCC Part15 (15.215) , Subpart C | |
|---|---|
| Section | Test Item |
| 15.215 | Bandwidth |

#### 4.1.1 TEST PROCEDURE

1. Set RBW = 100 kHz.
2. Set the video bandwidth (VBW) ≥RBW.
3. Detector = Peak.
4. Trace mode = max hold.
5. Sweep = auto couple.
6. Allow the trace to stabilize.
7. Measure the maximum width of the emission that is constrained by the frequencies associated with the two outermost amplitude points (upper and lower frequencies) that are attenuated by 20 dB relative to the maximum level measured in the fundamental emission.

#### 4.1.2 DEVIATION FROM STANDARD

No deviation.

#### 4.1.3 TEST SETUP

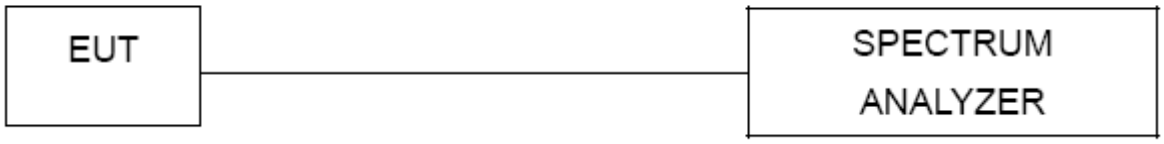


#### 4.1.4 EUT OPERATION CONDITIONS

The EUT tested system was configured as the statements of 2.3 Unless otherwise a special operating condition is specified in the follows during the testing.

### 4.1.5 TEST RESULTS

| | | | |
|---|---|---|---|
| Temperature: | 25℃ | Relative Humidity: | 60% |
| Pressure: | 1012 hPa | Test Voltage : | DC 3V |
| Test Mode : | TX Mode /CH00, CH19, CH39 | | |

| | Frequency (MHz) | 20dB Bandwidth (MHz) | Result |
|---|---|---|---|
| GFSK | 2402 | 1.196 | Pass |
| | 2440 | 1.204 | Pass |
| | 2480 | 1.194 | Pass |

GFSK

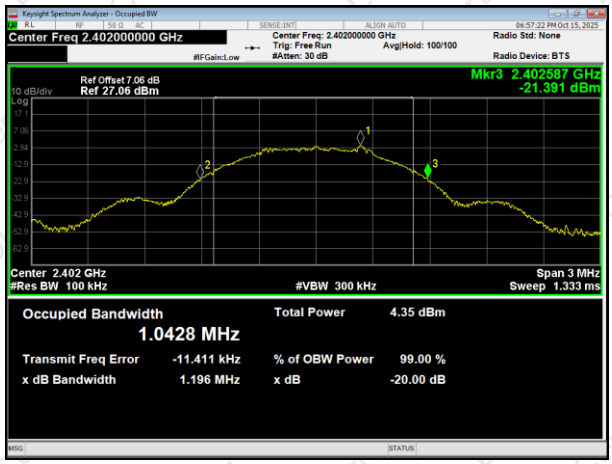


2402MHz

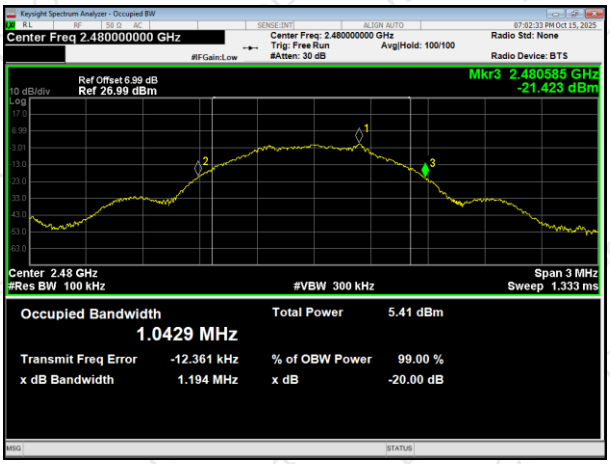


2480MHz

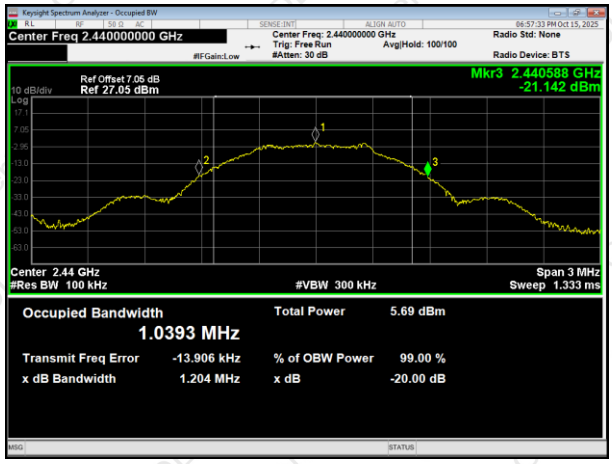


2440MHz

## 5. ANTENNA REQUIREMENT

### 5.1 STANDARD REQUIREMENT

15.203 requirement: For intentional device, according to 15.203: an intentional radiator shall be designed to ensure that no antenna other than that furnished by the responsible party shall be used with the device.

### 5.2 EUT ANTENNA

The EUT antenna is Internal Antenna, It comply with the standard requirement.

## 6. TEST SEUUP PHOTO

Reference to the appendix I for details.

## 7. EUT PHOTO

Reference to the appendix II for details.

※※※※※ **END OF REPORT** ※※※※※