# FCC RADIO TEST REPORT
# FCC ID: 2BSW8-H80

**Product** : Mini PC

**Trade Mark** :

**Model Name** : H80

**Family Model** : N/A

**Report No.** : N25122401108E

**Prepared for**

HONG KONG LELEGAO TECHNOLOGY CO.,LIMITED
19H Maxgrand Plaza, No.3 Tai Yau Street, San Po Kong, Kowloon, HongKong, China

**Prepared by**

Shenzhen NTEK Testing Technology Co., Ltd.
No. 24 Xinfa East Road, Xiangshan Community, Xinqiao Street, Baoan District, Shenzhen, Guangdong, People's Republic of China

Tel. 0755-23200050 Website: http://www.ntek.org.cn

# TEST RESULT CERTIFICATION

**Applicant's name** ..... : HONG KONG LELEGAO TECHNOLOGY CO.,LIMITED

Address ..... : 19H Maxgrand Plaza, No.3 Tai Yau Street, San Po Kong, Kowloon, HongKong, China

**Manufacturer's Name**..... : Shenzhen Chunhong Technology Co., Ltd

Address ..... : 1209U8, International Chamber of Commerce Center, 168 Fuhua 3rd Road, Futian District, Shenzhen,China

**Product description**

Product name..... : Mini PC

Model and/or type reference : H80

Family Model..... : N/A

Sample number S2512240251-1#

**Standards** ..... : FCC Part15.407

Test procedure ..... ANSI C63.10-2020 and KDB 789033 D02 General UNII Test Procedures New Rules v02r01

This device described above has been tested by NTEK, and the test results show that the equipment under test (EUT) is in compliance with the FCC requirements/ the Industry Canada requirements.. And it is applicable only to the tested sample identified in the report.

This report shall not be reproduced except in full, without the written approval of NTEK, this document may be altered or revised by NTEK, personnel only, and shall be noted in the revision of the document.

**Date of Test** .....

Date (s) of performance of tests..... Dec. 24, 2025 ~ Jan. 28, 2026

Date of Issue..... Mar. 16, 2026

Test Result..... **Pass**

| Prepared By : | Reviewed By : | Approved By : |
|---|---|---|
| Kieron Luo | Aaron Cheng | Alex Li |
| Kieron Luo (Project Engineer) | Aaron Cheng (Supervisor) | Alex Li (Manager) |

## Table of Contents


| | Page |
|---|---|
| 1 . SUMMARY OF TEST RESULTS | 5 |
| 1.1 FACILITIES AND ACCREDITATIONS | 6 |
| 1.2 MEASUREMENT UNCERTAINTY | 6 |
| 2 . GENERAL INFORMATION | 7 |
| 2.1 GENERAL DESCRIPTION OF EUT | 7 |
| 2.2 DESCRIPTION OF TEST MODES | 9 |
| 2.3 BLOCK DIGRAM SHOWING THE CONFIGURATION OF SYSTEM TESTED | 10 |
| 2.4 DESCRIPTION OF SUPPORT UNITS(CONDUCTED MODE) | 11 |
| 2.5 EQUIPMENTS LIST FOR ALL TEST ITEMS | 12 |
| 3 . TEST REQUIREMENTS | 14 |
| 3.1 CONDUCTED EMISSION MEASUREMENT | 14 |
| 3.2 RADIATED EMISSION MEASUREMENT | 17 |
| 3.3 POWER SPECTRAL DENSITY TEST | 35 |
| 3.4 26DB & 99% EMISSION BANDWIDTH | 39 |
| 3.5 MINIMUM 6 DB BANDWIDTH | 41 |
| 3.6 MAXIMUM CONDUCTED OUTPUT POWER | 43 |
| 3.7 FREQUENCY STABILITY MEASUREMENT | 45 |
| 4. ANTENNA REQUIREMENT | 47 |
| 4.1 STANDARD REQUIREMENT | 47 |
| 4.2 EUT ANTENNA | 47 |

**Revision History**

| Report No. | Version | Description | Issued Date |
|---|---|---|---|
| N25122401108E | Rev.01 | Initial issue of report | Mar. 16, 2026 |
| | | | |
| | | | |
| | | | |
| | | | |
| | | | |
| | | | |
| | | | |
| | | | |
| | | | |
| | | | |
| | | | |
| | | | |
| | | | |
| | | | |

## 1. SUMMARY OF TEST RESULTS

Test procedures according to the technical standards:

| FCC Part15 (15.407) , Subpart E | | | |
|---|---|---|---|
| Standard Section | Test Item | Judgment | Remark |
| 15.207 | AC Power Line Conducted Emissions | PASS | |
| 15.209(a),<br>15.407 (b)(1)<br>15.407 (b)(4) | Spurious Radiated Emissions | PASS | |
| 15.407 (a)(1)<br>15.407 (a)(3) | 26 dB and 99% Emission Bandwidth | PASS | |
| 15.407(e) | Minimum 6 dB bandwidth | PASS | |
| 15.407 (a)(1)<br>15.407 (a)(3) | Maximum Conducted Output Power | PASS | |
| 15.407(b)(1)<br>15.407(b)(4) | Band Edge | PASS | |
| 15.407 (a)(1)<br>15.407 (a)(3) | Power Spectral Density | PASS | |
| 15.407(b) | Spurious Emissions at Antenna Terminals | PASS | |
| 15.203 | Antenna Requirement | PASS | |
| 15.407(c) | Automatically discontinue transmission | PASS | |

NOTE:

(1)" N/A" denotes test is not applicable in this Test Report

## 1.1 FACILITIES AND ACCREDITATIONS

FACILITIES

All measurement facilities used to collect the measurement data are located at

No. 24 Xinfa East Road, Xiangshan Community, Xinqiao Street, Baoan District, Shenzhen, Guangdong, People's Republic of China.

The sites are constructed in conformance with the requirements of ANSI C63.7, ANSI C63.10 and CISPR Publication 22.

LABORATORY ACCREDITATIONS AND LISTINGS

Site Description

| | | |
|---|---|---|
| CNAS-Lab. | : | The Certificate Registration Number is L5516. |
| IC-Registration | | The Certificate Registration Number is 9270A.<br>CAB identifier:CN0074 |
| FCC- Accredited | | Test Firm Registration Number: 463705.<br>Designation Number: CN1184 |
| A2LA-Lab. | | The Certificate Registration Number is 4298.01<br>This laboratory is accredited in accordance with the recognized International Standard ISO/IEC 17025:2017 General requirements for the competence of testing and calibration laboratories.<br>This accreditation demonstrates technical competence for a defined scope and the operation of a laboratory quality management system (refer to joint ISO-ILAC-IAF Communiqué dated 8 January 2009). |
| Name of Firm | : | Shenzhen NTEK Testing Technology Co., Ltd. |
| Site Location | : | No. 24 Xinfa East Road, Xiangshan Community, Xinqiao Street, Baoan District, Shenzhen, Guangdong, People's Republic of China. |

## 1.2 MEASUREMENT UNCERTAINTY

The reported uncertainty of measurement y±U, where expended uncertainty U is based on a standard uncertainty multiplied by a coverage factor of k=2, providing a level of confidence of approximately 95 %.

| No. | Item | Uncertainty |
|---|---|---|
| 1 | Conducted Emission Test | ±2.80dB |
| 2 | RF power, conducted | ±0.16dB |
| 3 | Spurious emissions, conducted | ±0.21dB |
| 4 | All emissions, radiated(30MHz~1GHz) | ±2.64dB |
| 5 | All emissions, radiated(1GHz~6GHz) | ±2.40dB |
| 6 | All emissions, radiated( > 6GHz) | ±2.52dB |
| 7 | Temperature | ±0.5°C |
| 8 | Humidity | ±2% |
| 9 | All emissions, radiated(9KHz~30MHz) | ±6dB |
| 10 | Occupied bandwidth | ±4.7% |
| 11 | Duty cycle | ±2.5% |

# 2. GENERAL INFORMATION

## 2.1 GENERAL DESCRIPTION OF EUT

| | |
|---|---|
| Equipment | Mini PC |
| Trade Mark | |
| Model Name | H80 |
| Family Model | N/A |
| Model Difference | N/A |
| FCC ID | 2BSW8-H80 |
| Product Description | |
| | IEEE 802.11 WLAN Mode Supported: ☒802.11a/n/ac (20MHz channel bandwidth)<br>☒802.11n/ac (40MHz channel bandwidth)<br>☒802.11ac (80MHz channel bandwidth) |
| | Data Rate: 802.11a: 6,9,12,18,24,36,48,54Mbps;<br>802.11n(HT20/HT40):MCS0-MCS15;<br>802.11ac(VHT20):MCS0-MCS8;<br>802.11ac(VHT40/VHT80):MCS0-MCS9; |
| | Modulation: OFDM with BPSK/QPSK/16QAM/64QAM/256QAM for 802.11a/n/ac; |
| | Operating Frequency Range: ☒5180-5240MHz for 802.11a/n(HT20)/ac(VHT20); 5190-5230MHz for 802.11n(HT40)/ac(VHT40); 5210MHz for 802.11ac(VHT80)<br>☒5745-5825 MHz for 802.11a/n(HT20)/ac(VHT20); 5755-5795 MHz for 802.11n(HT40)/ac(VHT40); 5775MHz for 802.11ac(VHT80) |
| | Number of Channels: ☒4 channels for 802.11a/n20/ac20 in the 5180-5240MHz band ;<br>2 channels for 802.11 n40/ac40 in the 5190-5230MHz band ;<br>1 channels for 802.11 ac80 in the 5210MHz band ;<br>☒5 channels for 802.11a/n20/ac20 in the 5745-5825MHz band ;<br>2 channels for 802.11 n40/ac40 in the 5755-5795MHz band ;<br>1 channels for 802.11 ac80 in the 5775MHz band ; |
| | Antenna Type: FPC Antenna |
| | Antenna Gain: band I : 4.25dBi; band IV: 4.27dBi |
| | Based on the application, features, or specification exhibited in User's Manual, More details of EUT technical specification, please refer to the User's Manual. |
| Adapter | Model: SOY-1200300US-540<br>Input: 100-240V~50/60Hz 0.9A Max<br>Output: 12.0V⎓3.0A, 36.0W |
| Battery | DC 3.0V, 220mAh |
| Power supply | DC 12V from adapter |
| Connecting I/O Port(s) | Please refer to the User's Manual |
| HW Version | N/A |
| SW Version | N/A |

Note:

1. For a more detailed features description, please refer to the manufacturer's specifications or the User's Manual.
2. Frequency and Channel list for 802.11a/n/ac(20MHz) band I (5180-5240MHz):

| 802.11a/n/ac( 20MHz) Carrier Frequency Channel | | | | | | | |
|---|---|---|---|---|---|---|---|
| Channel | Frequency (MHz) | Channel | Frequency (MHz) | Channel | Frequency (MHz) | Channel | Frequency (MHz) |
| 36 | 5180 | 44 | 5220 | - | - | - | - |
| 40 | 5200 | 48 | 5240 | - | - | - | - |

Frequency and Channel list for 802.11n/ac(40MHz) band I (5190-5230MHz):

| 802.11n/ac(40MHz) Carrier Frequency Channel | | | | | | | |
|---|---|---|---|---|---|---|---|
| Channel | Frequency (MHz) | Channel | Frequency (MHz) | Channel | Frequency (MHz) | Channel | Frequency (MHz) |
| 38 | 5190 | - | - | - | - | - | - |
| 46 | 5230 | - | - | - | - | - | - |

Frequency and Channel list for 802.11ac(80MHz) band I (5210MHz):

| 802.11ac(80MHz) Carrier Frequency Channel | | | | | | | |
|---|---|---|---|---|---|---|---|
| Channel | Frequency (MHz) | Channel | Frequency (MHz) | Channel | Frequency (MHz) | Channel | Frequency (MHz) |
| 42 | 5210 | - | - | - | - | - | - |

Frequency and Channel list for 802.11a/n/ac(20 MHz) band IV (5745-5825MHz):

| 802.11a/n/ac( 20 MHz) Carrier Frequency Channel | | | | | | | |
|---|---|---|---|---|---|---|---|
| Channel | Frequency (MHz) | Channel | Frequency (MHz) | Channel | Frequency (MHz) | Channel | Frequency (MHz) |
| 149 | 5745 | 153 | 5765 | 157 | 5785 | 161 | 5805 |
| 165 | 5825 | - | - | - | - | - | - |

Frequency and Channel list for 802.11n/ac(40MHz) band IV (5755-5795MHz):

| 802.11n/ac(40MHz) Carrier Frequency Channel | | | | | |
|---|---|---|---|---|---|
| Channel | Frequency (MHz) | Channel | Frequency (MHz) | Channel | Frequency (MHz) |
| 151 | 5755 | 159 | 5795 | - | - |

Frequency and Channel list for 802.11ac(80MHz) band IV (5775MHz):

| 802.11ac(80MHz) Carrier Frequency Channel | | | | | |
|---|---|---|---|---|---|
| Channel | Frequency (MHz) | Channel | Frequency (MHz) | Channel | Frequency (MHz) |
| 155 | 5775 | | | - | - |

## 2.2 DESCRIPTION OF TEST MODES

To investigate the maximum EMI emission characteristics generates from EUT, the test system was pre-scanning tested base on the consideration of following EUT operation mode or test configuration mode which possible have effect on EMI emission level. Each of these EUT operation mode(s) or test configuration mode(s) mentioned above was evaluated respectively.

| Pretest Mode | Description |
|---|---|
| Mode 1 | Normal Link Mode |
| Mode 2 | 802.11a / n 20 /ac 20 CH36/ CH40/ CH 48<br>802.11a / n 20 / ac 20 CH149/ CH157/ CH 165 |
| Mode 3 | 802.11n40 / ac40 CH38/ CH 46<br>802.11n 40 / ac 40 CH 151 / CH 159 |
| Mode 4 | 802.11ac80 CH 42<br>802.11ac 80 CH 155 |

| **For Radiated Emission** | |
|---|---|
| Final Test Mode | Description |
| Mode 1 | Normal Link Mode |
| Mode 2 | 802.11a / n 20 /ac 20 CH36/ CH40/ CH 48<br>802.11a / n 20 / ac 20 CH149/ CH157/ CH 165 |
| Mode 3 | 802.11n40 / ac40 CH38/ CH 46<br>802.11n 40 / ac 40 CH 151 / CH 159 |
| Mode 4 | 802.11ac80 CH 42<br>802.11ac 80 CH 155 |

Note:

(1) The measurements are performed at the highest, middle, lowest available channels.

(2) The measurements are performed at all Bit Rate of Transmitter, the worst data was reported

## 2.3 BLOCK DIGRAM SHOWING THE CONFIGURATION OF SYSTEM TESTED

For AC Conducted Emission Mode

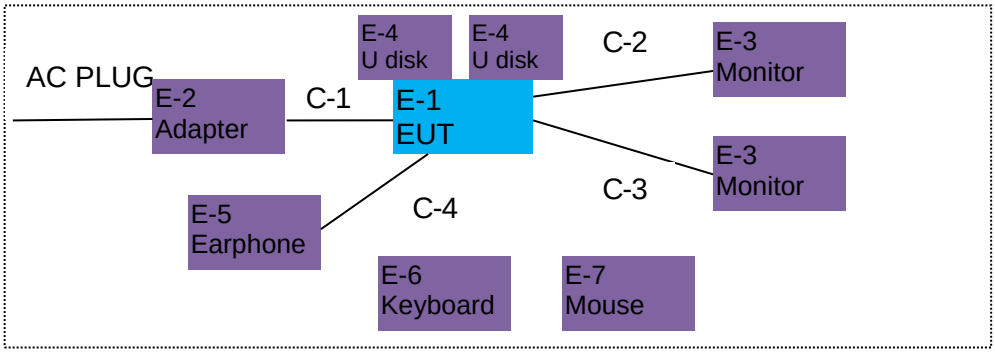


For Radiated Test Cases

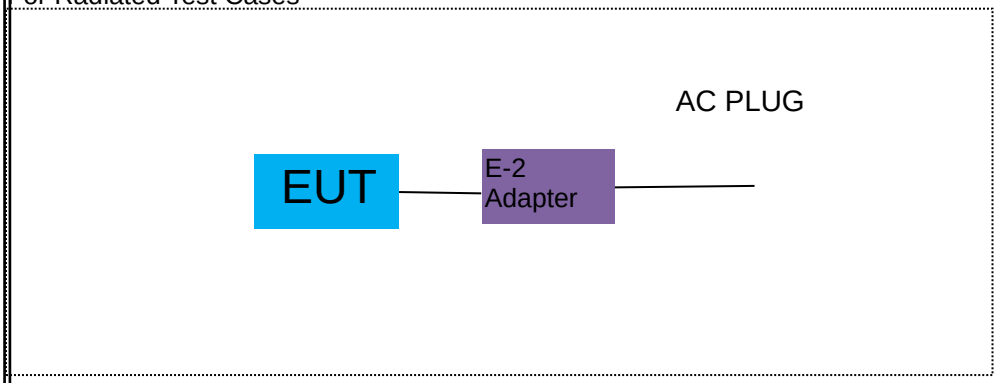


For Conducted Test Cases

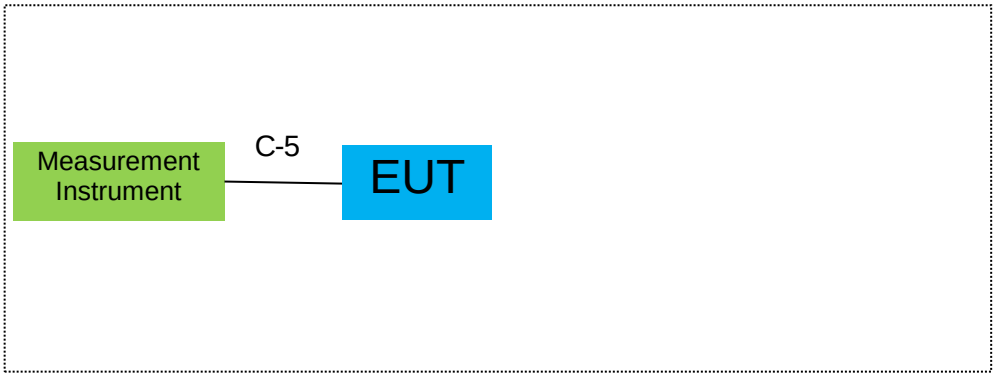


Note: 1.The temporary antenna connector is soldered on the PCB board in order to perform conducted tests and this temporary antenna connector is listed in the equipment list.
2. EUT built-in battery-powered, the battery is fully-charged.

## 2.4 DESCRIPTION OF SUPPORT UNITS(CONDUCTED MODE)

The EUT has been tested as an independent unit together with other necessary accessories or support units. The following support units or accessories were used to form a representative test configuration during the tests.

| Item | Equipment | Model/Type No. | Series No. | Note |
|---|---|---|---|---|
| E-1 | Mini PC | H80 | N/A | EUT |
| E-2 | Adapter | SOY-1200300US-540 | N/A | Peripherals |
| E-3 | Monitor*2 | N/A | N/A | Peripherals |
| E-4 | U disk*2 | N/A | N/A | Peripherals |
| E-5 | Earphone | N/A | N/A | Peripherals |
| E-6 | Keyboard | N/A | N/A | Peripherals |
| E-7 | Mouse | N/A | N/A | Peripherals |
| | | | | |
| | | | | |

| Item | Cable Type | Shielded Type | Ferrite Core | Length |
|---|---|---|---|---|
| C-1 | DC Cable | NO | NO | 1.0m |
| C-2 | HDMI Cable | YES | NO | 1.5m |
| C-3 | HDMI Cable | YES | NO | 1.5m |
| C-4 | Earphone Cable | NO | NO | 1.2m |
| C-5 | RF Cable | YES | NO | 0.1m |
| | | | | |
| | | | | |

Note:

(1) The support equipment was authorized by Declaration of Confirmation.

(2) For detachable type I/O cable should be specified the length in cm in『Length』column.

## 2.5 EQUIPMENTS LIST FOR ALL TEST ITEMS

Radiation& Conducted Test equipment

| Item | Kind of Equipment | Manufacturer | Type No. | Serial No. | Last calibration | Calibrated until | Calibration period |
|---|---|---|---|---|---|---|---|
| 1 | Spectrum Analyzer | Agilent | E4440A | MY41000130 | 2025.04.17 | 2026.04.16 | 1 year |
| 2 | Spectrum Analyzer | Agilent | N9020A | MY49100060 | 2025.04.17 | 2026.04.16 | 1 year |
| 3 | Spectrum Analyzer | R&S | FSV40 | 101417 | N/A | N/A | 1 year |
| 4 | Test Receiver | R&S | ESPI7 | 101318 | N/A | N/A | 1 year |
| 5 | Bilog Antenna | TESEQ | CBL6111D | 31216 | 2024.05.12 | 2027.05.11 | 1 year |
| 6 | 50Ω Coaxial Switch | Anritsu | MP59B | 6200983705 | 2024.05.12 | 2027.05.11 | 3 year |
| 7 | Horn Antenna | EM | EM-AH-10180 | 2011071402 | 2023.06.17 | 2026.06.16 | 3 year |
| 8 | Broadband Horn Antenna | SCHWARZBECK | BBHA 9170 | 803 | 2023.06.17 | 2026.06.16 | 3 year |
| 9 | Amplifier | EMC | EMC051835SE | 980246 | 2024.04.26 | 2027.04.25 | 1 year |
| 10 | Active Loop Antenna | SCHWARZBECK | FMZB 1519 B | 055 | 2025.04.17 | 2026.04.16 | 3 year |
| 11 | Power Meter | MWRFtest | MW100-PD | MW2021043 | 2025.04.17 | 2026.04.16 | 1 year |
| 12 | Test Cable (9KHz-30MHz) | N/A | R-01 | N/A | 2024.04.26 | 2027.04.25 | 3 year |
| 13 | Test Cable (30MHz-1GHz) | N/A | R-02 | N/A | 2024.04.25 | 2027.04.24 | 3 year |
| 14 | High Test Cable(1G-40GHz) | N/A | R-03 | N/A | 2024.04.25 | 2027.04.24 | 3 year |
| 15 | Filter | TRILTHIC | 2400MHz | 29 | 2025.04.17 | 2026.04.16 | 3 year |
| 16 | temporary antenna connector (Note) | NTS | R001 | N/A | N/A | N/A | N/A |

Note:
We will use the temporary antenna connector (soldered on the PCB board) When conducted test
And this temporary antenna connector is listed within the instrument list

AC Conduction Test equipment

| Item | Kind of Equipment | Manufacturer | Type No. | Serial No. | Last calibration | Calibrated until | Calibration period |
|---|---|---|---|---|---|---|---|
| 1 | Test Receiver | R&S | ESCI | 101160 | 2025.04.17 | 2026.04.16 | 1 year |
| 2 | LISN | R&S | ENV216 | 101313 | 2025.04.16 | 2026.04.15 | 1 year |
| 3 | LISN | SCHWARZBECK | NNLK 8129 | 8129245 | 2025.04.16 | 2026.04.15 | 1 year |
| 4 | 50Ω Coaxial Switch | ANRITSU CORP | MP59B | 6200983704 | 2024.04.26 | 2027.04.25 | 3 year |
| 5 | Test Cable (9KHz-30MHz) | N/A | C01 | N/A | 2023.05.06 | 2026.05.05 | 3 year |
| 6 | Test Cable (9KHz-30MHz) | N/A | C02 | N/A | 2023.05.06 | 2026.05.05 | 3 year |
| 7 | Test Cable (9KHz-30MHz) | N/A | C03 | N/A | 2023.05.06 | 2026.05.05 | 3 year |

Note: Each piece of equipment is scheduled for calibration once a year except the Test Cable& Aux Equipment which is scheduled for calibration every 3 years.

Measurement Software

| Item | Manufacturer | Software Name | Software Version | Description |
|---|---|---|---|---|
| 1 | MWRFtest | MTS 8310 2.4GHz/5GHz | 2.0 | RF Conducted Test |
| 2 | Farad | EZ-EMC_RE | AIT-03A | RadiatedTest |
| 3 | Farad | EZ-EMC_CE | AIT-03A | AC Conducted Test |

# 3. TEST REQUIREMENTS

## 3.1CONDUCTED EMISSION MEASUREMENT

### 3.1.1 APPLICABLE STANDARD

According to FCC Part 15.207(a)

### 3.1.2 CONFORMANCE LIMIT

| Frequency(MHz) | Conducted Emission Limit | |
|---|---|---|
| | Quasi-peak | Average |
| 0.15-0.5 | 66-56* | 56-46* |
| 0.5-5.0 | 56 | 46 |
| 5.0-30.0 | 60 | 50 |

Note: 1. *Decreases with the logarithm of the frequency
2. The lower limit shall apply at the transition frequencies
3. The limit decreases in line with the logarithm of the frequency in the range of 0.15 to 0.50MHz.

### 3.1.3 TEST CONFIGURATION

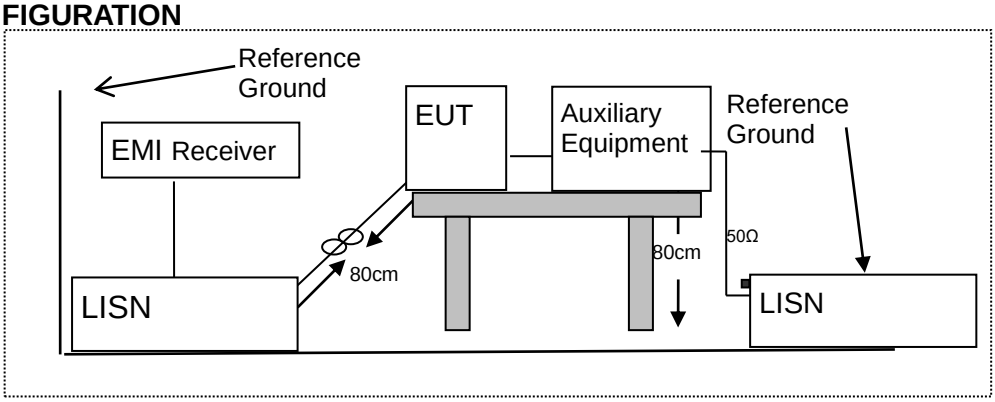


### 3.1.4 TEST PROCEDURE

According to the requirements in Section 13.1.4.1 of ANSI C63.10-2020 Conducted emissions the EUT measured in the frequency range between 0.15 MHz and 30 MHz using CISPR Quasi-Peak and average detector mode.

1. The EUT was placed 0.4 meter from the conducting wall of the shielding room.
2. The EUT was placed on a table which is 0.8m above ground plane.
3. Connect EUT to the power mains through a line impedance stabilization network (LISN). All other support equipments powered from additional LISN(s). The LISN provide 50 Ohm/ 50uH of coupling impedance for the measuring instrument.
4. Interconnecting cables that hang closer than 40 cm to the ground plane shall be folded back and forth in the center forming a bundle 30 to 40cm long.
5. I/O cables that are not connected to a peripheral shall be bundled in the center. The end of the cable may be terminated, if required, using the correct terminating impedance. The overall length shall not exceed 1 m.
6. LISN at least 80 cm from nearest part of EUT chassis.
7. The frequency range from 150KHz to 30MHz was searched.
8. Set the test-receiver system to Peak Detect Function and specified bandwidth(IF bandwidth=9KHz) with Maximum Hold Mode
9. For the actual test configuration, please refer to the related Item –EUT Test Photos.

### 3.1.5 TEST RESULTS

| | | | |
|---|---|---|---|
| EUT： | Mini PC | Model Name ： | H80 |
| Temperature： | 23.8℃ | Relative Humidity： | 45.1% |
| Pressure： | 1010hPa | Phase： | L |
| Test Voltage ： | DC 12V from Adapter AC 120V/60Hz | Test Mode： | Mode 1 |

| Frequency (MHz) | Reading Level (dBμV) | Correct Factor (dB) | Measure-ment (dBμV) | Limits (dBμV) | Margin (dB) | Remark |
|---|---|---|---|---|---|---|
| 0.1883 | 36.40 | 19.55 | 55.95 | 64.11 | -8.16 | peak |
| 0.1900 | 28.61 | 19.54 | 48.15 | 54.04 | -5.89 | AVG |
| 0.2521 | 33.87 | 19.54 | 53.41 | 61.69 | -8.28 | peak |
| 0.2540 | 22.41 | 19.54 | 41.95 | 51.63 | -9.68 | AVG |
| 0.3020 | 30.76 | 19.54 | 50.30 | 60.19 | -9.89 | peak |
| 0.3002 | 15.22 | 19.54 | 34.76 | 50.24 | -15.48 | AVG |
| 0.5140 | 25.67 | 19.56 | 45.23 | 56.00 | -10.77 | peak |
| 0.5100 | 12.70 | 19.56 | 32.26 | 46.00 | -13.74 | AVG |
| 8.0460 | 27.86 | 20.23 | 48.09 | 60.00 | -11.91 | peak |
| 8.0460 | 7.38 | 20.23 | 27.61 | 50.00 | -22.39 | AVG |
| 17.9020 | 25.91 | 22.05 | 47.96 | 60.00 | -12.04 | peak |
| 17.9020 | 5.17 | 22.05 | 27.22 | 50.00 | -22.78 | AVG |

Remark:
1. All readings are Quasi-Peak and Average values.
2. Factor = Insertion Loss + Cable Loss.

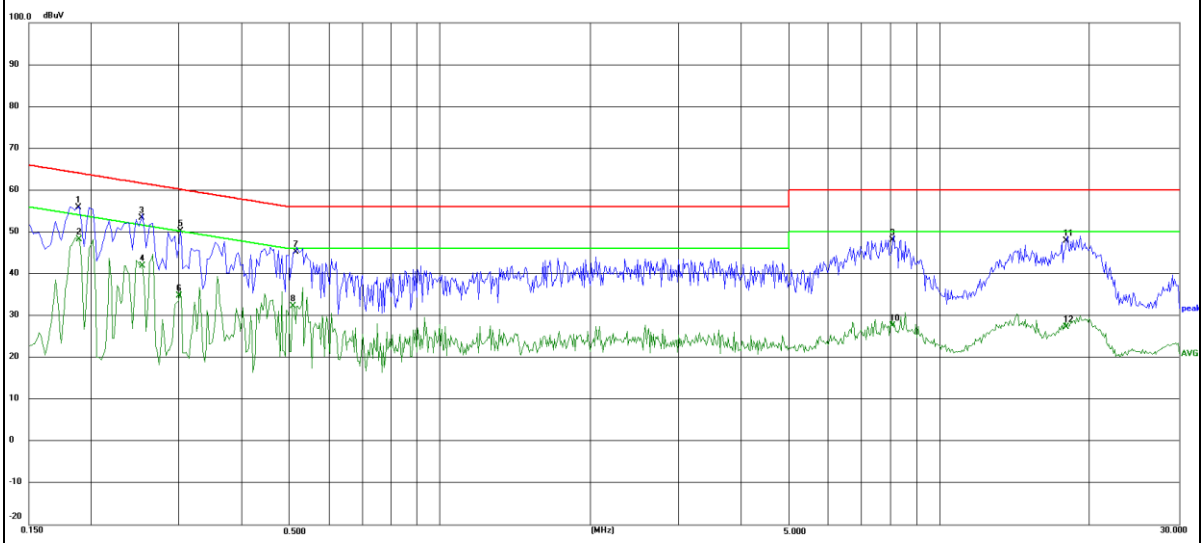

| | | | |
|---|---|---|---|
| EUT： | Mini PC | Model Name ： | H80 |
| Temperature： | 23.8℃ | Relative Humidity： | 45.1% |
| Pressure： | 1010hPa | Phase： | N |
| Test Voltage ： | DC 12V from Adapter AC 120V/60Hz | Test Mode： | Mode 1 |

| Frequency (MHz) | Reading Level (dBμV) | Correct Factor (dB) | Measure-ment (dBμV) | Limits (dBμV) | Margin (dB) | Remark |
|---|---|---|---|---|---|---|
| 0.1786 | 38.22 | 19.52 | 57.74 | 64.55 | -6.81 | peak |
| 0.1786 | 19.99 | 19.52 | 39.51 | 54.55 | -15.04 | AVG |
| 0.2630 | 32.33 | 19.54 | 51.87 | 61.34 | -9.47 | peak |
| 0.2602 | 8.47 | 19.54 | 28.01 | 51.43 | -23.42 | AVG |
| 0.2940 | 30.01 | 19.54 | 49.55 | 60.41 | -10.86 | peak |
| 0.2924 | 9.49 | 19.54 | 29.03 | 50.46 | -21.43 | AVG |
| 1.9220 | 23.23 | 19.68 | 42.91 | 56.00 | -13.09 | peak |
| 1.9220 | 3.90 | 19.68 | 23.58 | 46.00 | -22.42 | AVG |
| 7.5540 | 29.34 | 20.03 | 49.37 | 60.00 | -10.63 | peak |
| 7.4940 | 6.68 | 20.03 | 26.71 | 50.00 | -23.29 | AVG |
| 18.7220 | 23.40 | 21.94 | 45.34 | 60.00 | -14.66 | peak |
| 18.6900 | 3.76 | 21.95 | 25.71 | 50.00 | -24.29 | AVG |

Remark:
1. All readings are Quasi-Peak and Average values.
2. Factor = Insertion Loss + Cable Loss.

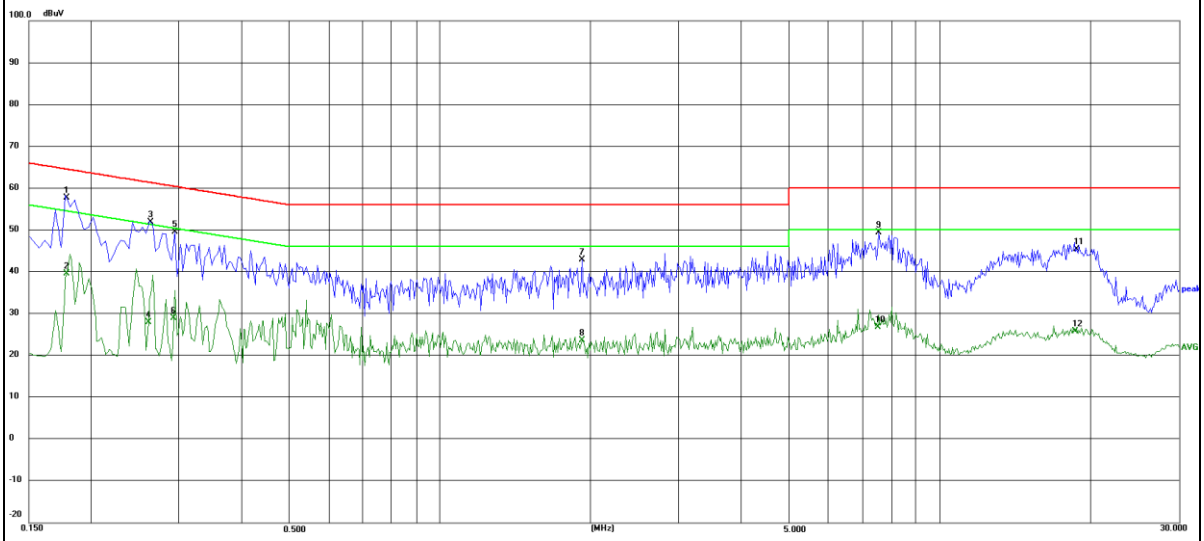

## 3.2 RADIATED EMISSION MEASUREMENT

### 3.2.1 APPLICABLE STANDARD

According to FCC Part 15.407(b) and 15.209

### 3.2.2 CONFORMANCE LIMIT

According to FCC Part 15.407(b)(9)(10): radiated emissions which fall in the restricted bands, as defined in §15.205(a), must also comply with the radiated emission limits specified in §15.209(a) (see §15.205(c)).

According to FCC Part15.205, Restricted bands

| MHz | MHz | MHz | GHz |
|---|---|---|---|
| 0.090-0.110 | 16.42-16.423 | 399.9-410 | 4.5-5.15 |
| 0.495-0.505 | 16.69475-16.69525 | 608-614 | 5.35-5.46 |
| 2.1735-2.1905 | 16.80425-16.80475 | 960-1240 | 7.25-7.75 |
| 4.125-4.128 | 25.5-25.67 | 1300-1427 | 8.025-8.5 |
| 4.17725-4.17775 | 37.5-38.25 | 1435-1626.5 | 9.0-9.2 |
| 4.20725-4.20775 | 73-74.6 | 1645.5-1646.5 | 9.3-9.5 |
| 6.215-6.218 | 74.8-75.2 | 1660-1710 | 10.6-12.7 |
| 6.26775-6.26825 | 123-138 | 2200-2300 | 14.47-14.5 |
| 8.291-8.294 | 149.9-150.05 | 2310-2390 | 15.35-16.2 |
| 8.362-8.366 | 156.52475-156.52525 | 2483.5-2500 | 17.7-21.4 |
| 8.37625-8.38675 | 156.7-156.9 | 2690-2900 | 22.01-23.12 |
| 8.41425-8.41475 | 162.0125-167.17 | 3260-3267 | 23.6-24.0 |
| 12.29-12.293 | 167.72-173.2 | 3332-3339 | 31.2-31.8 |
| 12.51975-12.52025 | 240-285 | 3345.8-3358 | 36.43-36.5 |
| 12.57675-12.57725 | 322-335.4 | 3600-4400 | (2) |
| 13.36-13.41 | | | |

. In case the emission fall within the restricted band specified on 15.205(a), then the 15.209(a) limit in the table below has to be followed.

| Restricted Frequency(MHz) | Field Strength (μV/m) | Field Strength (dBμV/m) | Measurement Distance |
|---|---|---|---|
| 0.009~0.490 | 2400/F(KHz) | 20 log (uV/m) | 300 |
| 0.490~1.705 | 24000/F(KHz) | 20 log (uV/m) | 30 |
| 1.705~30.0 | 30 | 29.5 | 30 |
| 30-88 | 100 | 40 | 3 |
| 88-216 | 150 | 43.5 | 3 |
| 216-960 | 200 | 46 | 3 |
| Above 960 | 500 | 54 | 3 |

Limits of Radiated Emission Measurement(Above 1000MHz)

| Frequency(MHz) | Class B (dBuV/m) (at 3M) | |
|---|---|---|
| | PEAK | AVERAGE |
| Above 1000 | 74 | 54 |

Remark :1. Emission level in dBuV/m=20 log (uV/m)
2. Measurement was performed at an antenna to the closed point of EUT distance of meters.
3. For Frequency 9kHz~30MHz:
Distance extrapolation factor =40log(Specific distance/ test distance)(dB);
Limit line=Specific limits(dBuV) + distance extrapolation factor.
For Frequency above 30MHz:
Distance extrapolation factor =20log(Specific distance/ test distance)(dB);
Limit line=Specific limits(dBuV) + distance extrapolation factor.

Undesirable emission limits. Except as shown in paragraph (b)(7) of this section, the maximum emissions outside of the frequency bands of operation shall be attenuated in accordance with the

following limits:

(1) For transmitters operating in the 5.15-5.25 GHz band: All emissions outside of the 5.15-5.35 GHz band shall not exceed an e.i.r.p. of −27 dBm/MHz.

(4) For transmitters operating in the 5.725-5.85 GHz band:

(i) All emissions shall be limited to a level of −27 dBm/MHz at 75 MHz or more above or below the band edge increasing linearly to 10 dBm/MHz at 25 MHz above or below the band edge, and from 25 MHz above or below the band edge increasing linearly to a level of 15.6 dBm/MHz at 5 MHz above or below the band edge, and from 5 MHz above or below the band edge increasing linearly to a level of 27 dBm/MHz at the band edge.

### 3.2.3 MEASURING INSTRUMENTS

The Measuring equipment is listed in the section 6.3 of this test report.

### 3.2.4 TEST CONFIGURATION

(a) For radiated emissions below 30MHz

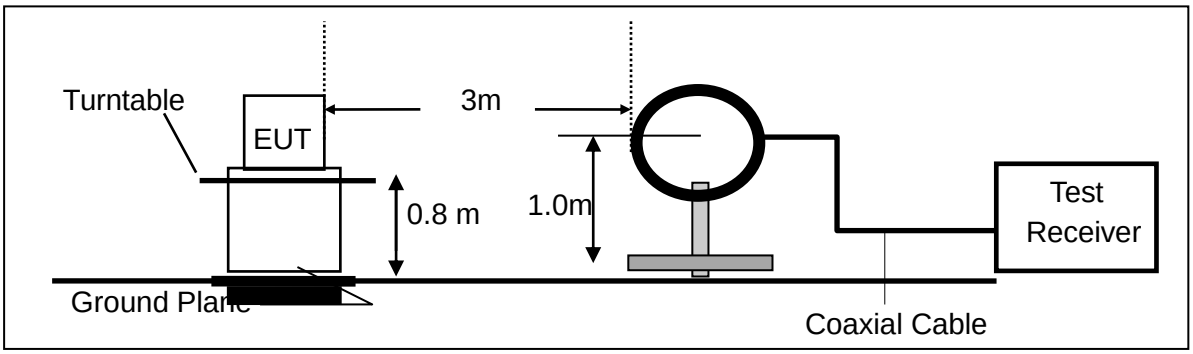


(b) For radiated emissions from 30MHz to 1000MHz

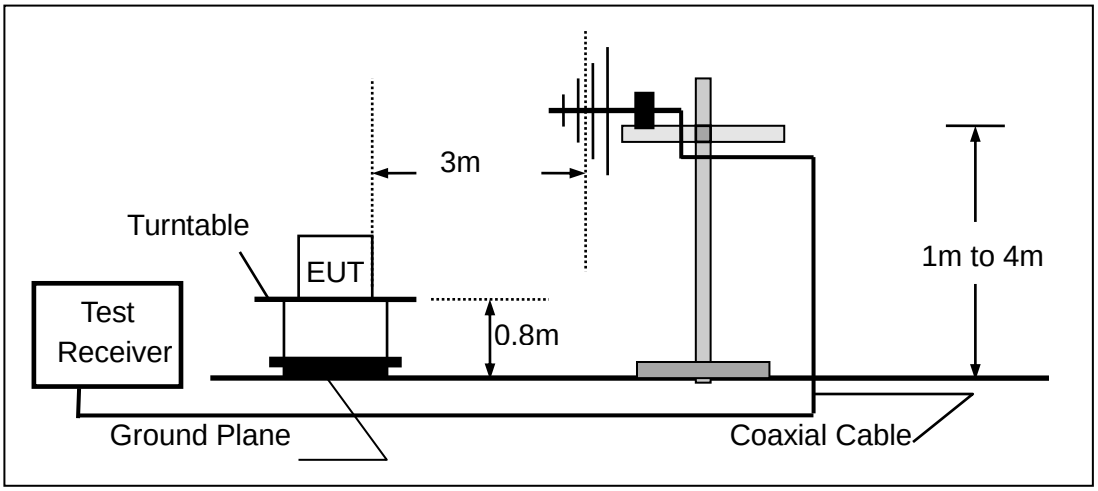


(c) For radiated emissions above 1000MHz

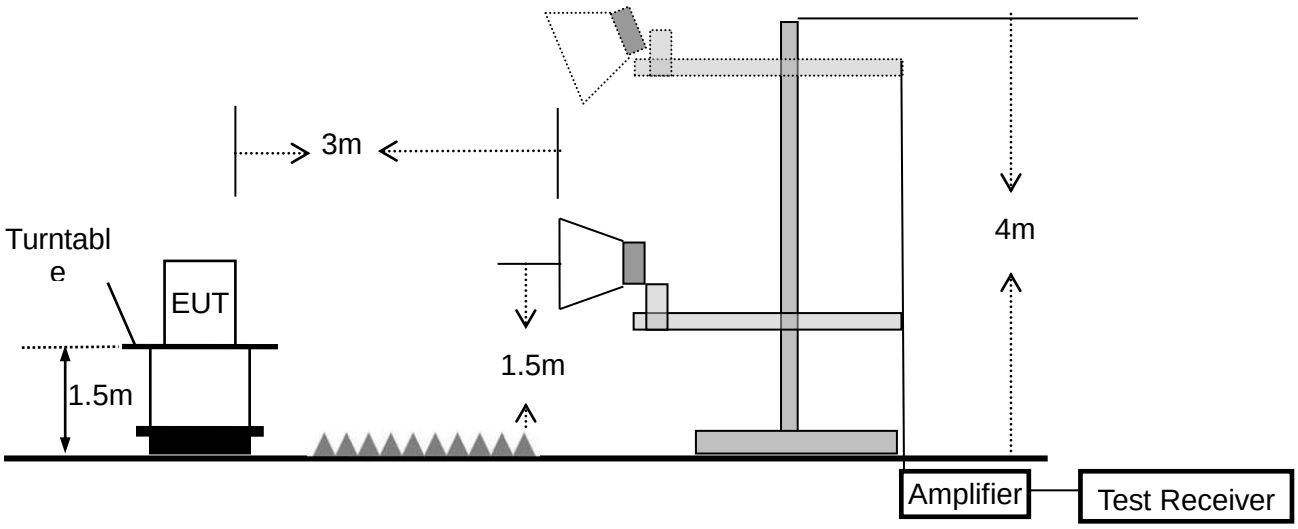

### 3.2.5 TEST PROCEDURE

The test site semi-anechoic chamber has met the requirement of NSA tolerance 4 dB according to the standards: ANSI C63.10-2020. The test distance is 3m.The setup is according to the requirements in Section 13.1.4.1 of ANSI C63.10-2020 and CAN/CSA-CEI/IEC CISPR 22.
This test is required for any spurious emission that falls in a Restricted Band, as defined in Section 15.205. It must be performed with the highest gain of each type of antenna proposed for use with the EUT.
Use the following spectrum analyzer settings:

| Spectrum Parameter | Setting |
|---|---|
| Attenuation | Auto |
| Start Frequency | 1000 MHz |
| Stop Frequency | 10th carrier harmonic |
| RB / VB (emission in restricted band) | 1 MHz / 1 MHz for Peak, 1 MHz / 1MHz for Average |

| Receiver Parameter | Setting |
|---|---|
| Attenuation | Auto |
| Start ~ Stop Frequency | 9kHz~150kHz / RB 200Hz for QP |
| Start ~ Stop Frequency | 150kHz~30MHz / RB 9kHz for QP |
| Start ~ Stop Frequency | 30MHz~1000MHz / RB 120kHz for QP |

a. The measuring distance of at 3 m shall be used for measurements at frequency up to 1GHz. For frequencies above 1GHz, any suitable measuring distance may be used.
b. The EUT was placed on the top of a rotating table 0.8 m for below 1GHz and 1.5m for above 1GHz the ground at a 3 meter. The table was rotated 360 degrees to determine the position of the highest radiation.
c. The height of the equipment or of the substitution antenna shall be 0.8 m for below 1GHz and 1.5m for above 1GHz; the height of the test antenna shall vary between 1 m to 4 m. Both horizontal and vertical polarizations of the antenna are set to make the measurement.
d. The initial step in collecting conducted emission data is a spectrum analyzer peak detector mode pre-scanning the measurement frequency range. Significant peaks are then marked and then Quasi Peak detector mode re-measured.
e. If the Peak Mode measured value compliance with and lower than Quasi Peak Mode Limit, the EUT shall be deemed to meet QP Limits and then no additional QP Mode measurement performed.
f. For the actual test configuration, please refer to the related Item –EUT Test Photos.

Note:

Both horizontal and vertical antenna polarities were tested
and performed pretest to three orthogonal axis. The worst case emissions were reported

During the radiated emission test, the Spectrum Analyzer was set with the following configurations:

| Frequency Band (MHz) | Function | Resolution bandwidth | Video Bandwidth |
|---|---|---|---|
| 30 to 1000 | QP | 120 kHz | 300 kHz |
| Above 1000 | Peak | 1 MHz | 1 MHz |
| | Average | 1 MHz | 1 MHz |

Note: for the frequency ranges below 30 MHz, a narrower RBW is used for these ranges but the measured value should add a RBW correction factor (RBWCF) where RBWCF [dB] =10*lg(100 [kHz]/narrower RBW [kHz]). , the narrower RBW is 1 kHz and RBWCF is 20 dB for the frequency 9 kHz to 150 kHz, and the narrower RBW is 10 kHz and RBWCF is 10 dB for the frequency 150 kHz to 30 MHz.

### 3.2.6 TEST RESULTS (9KHz – 30 MHz)

| | | | |
|---|---|---|---|
| EUT： | Mini PC | Model Name. : | H80 |
| Temperature： | 20 ℃ | Relative Humidtity： | 48% |
| Pressure： | 1010 hPa | Test Voltage ： | DC 12V from Adapter<br>AC 120V/60Hz |
| Test Mode ： | TX | Polarization : | -- |

| Freq. | Reading | Limit | Margin | State |
|---|---|---|---|---|
| (MHz) | (dBuV/m) | (dBuV/m) | (dB) | P/F |
| -- | -- | -- | -- | N/A |
| -- | -- | -- | -- | N/A |

**NOTE:**

The amplitude of spurious emissions which are attenuated by more than 20dB below the permissible value has no need to be reported.

### 3.2.7 TEST RESULTS (30MHz – 1GHz)

| | | | |
|---|---|---|---|
| EUT： | Mini PC | Model Name. ： | H80 |
| Temperature： | 25.4℃ | Relative Humidity： | 53% |
| Pressure： | 1010 hPa | Test Voltage ： | DC 12V from Adapter AC 120V/60Hz |
| Test Mode ： | TX(5G WIFI)- 802.11a (High CH) | | |

| Polar (H/V) | Frequency (MHz) | Meter Reading (dBuV) | Factor (dB) | Emission Level (dBuV/m) | Limits (dBuV/m) | Margin (dB) | Remark |
|---|---|---|---|---|---|---|---|
| V | 51.3004 | 16.00 | 19.65 | 35.65 | 40.00 | -4.35 | peak |
| V | 148.4410 | 21.66 | 14.56 | 36.22 | 43.50 | -7.28 | peak |
| V | 199.9855 | 21.31 | 17.71 | 39.02 | 43.50 | -4.48 | peak |
| V | 444.8514 | 20.53 | 23.36 | 43.89 | 46.00 | -2.11 | peak |
| V | 742.2586 | 14.63 | 28.36 | 42.99 | 46.00 | -3.01 | peak |
| V | 766.0570 | 11.88 | 28.67 | 40.55 | 46.00 | -5.45 | peak |

**Remark:**
Emission Level = Meter Reading + Factor, Margin= Emission Level - Limit

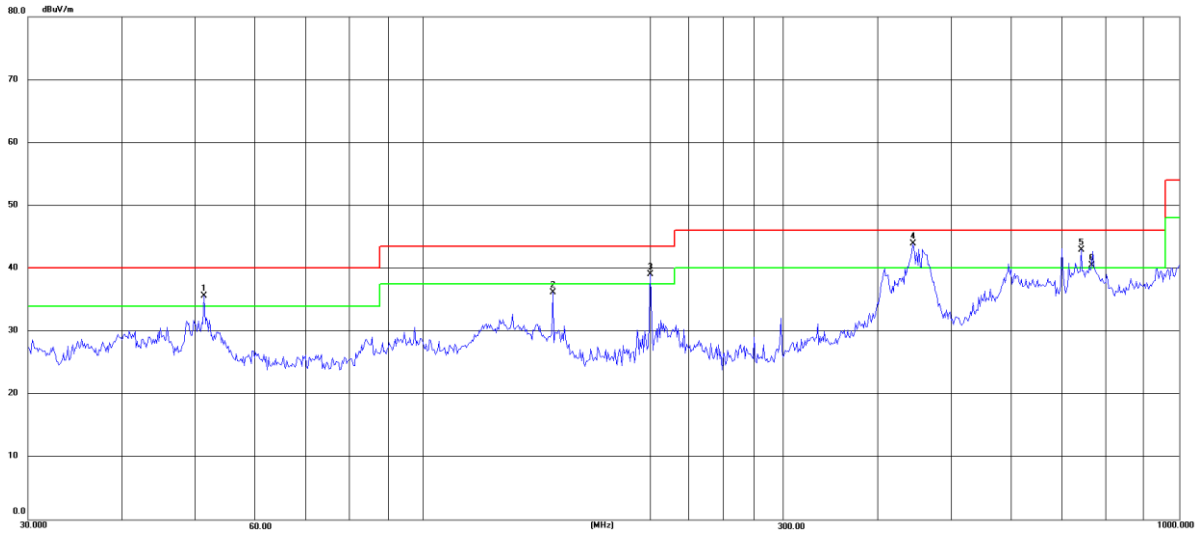

| Polar (H/V) | Frequency (MHz) | Meter Reading (dBuV) | Factor (dB) | Emission Level (dBuV/m) | Limits (dBuV/m) | Margin (dB) | Remark |
|---|---|---|---|---|---|---|---|
| H | 148.4410 | 21.28 | 14.56 | 35.84 | 43.50 | -7.66 | peak |
| H | 199.9855 | 21.44 | 17.71 | 39.15 | 43.50 | -4.35 | peak |
| H | 297.2240 | 21.50 | 20.35 | 41.85 | 46.00 | -4.15 | peak |
| H | 459.1143 | 19.45 | 23.73 | 43.18 | 46.00 | -2.82 | peak |
| H | 742.2586 | 14.58 | 28.36 | 42.94 | 46.00 | -3.06 | peak |
| H | 935.5461 | 12.68 | 30.63 | 43.31 | 46.00 | -2.69 | peak |

**Remark:**

Emission Level = Meter Reading + Factor, Margin= Emission Level - Limit

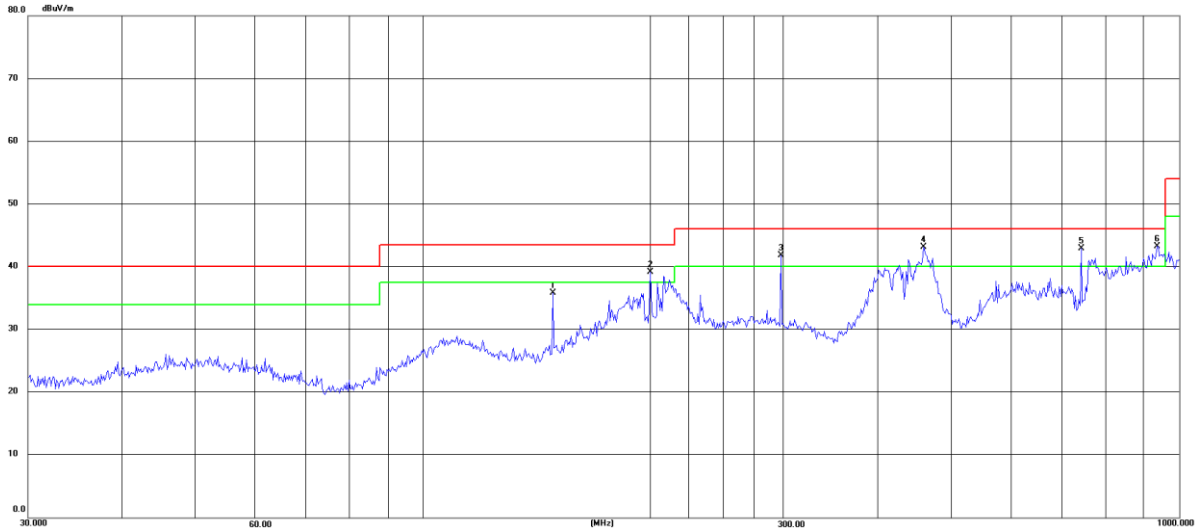


Note(1)“802.11a” mode is the worst mode.

(2)Other emissions are attenuated more than 20dB below the permissible limits, so it does not recorded in the report

### 3.2.8 TEST RESULTS (1GHz-18GHz)

| | | | |
|---|---|---|---|
| EUT： | Mini PC | Model Name. ： | H80 |
| Temperature： | 20 ℃ | Relative Humidity： | 48% |
| Pressure： | 1010 hPa | Test Voltage： | DC 12V from Adapter AC 120V/60Hz |
| Test Mode ： | TX(5.2G) - 802.11a_5180~5240MHz | | |

| Polar | Frequency | Meter Reading | Cable loss | Antenna Factor | Preamp Factor | Emission Level | Limits | Margin | Detector Type |
|---|---|---|---|---|---|---|---|---|---|
| (H/V) | (MHz) | (dBuV) | (dB) | dB/m | (dB) | (dBuV/m) | (dBuV/m) | (dB) | |
| Low Channel (5180 MHz)-Above 1G | | | | | | | | | |
| Vertical | 3695.00 | 68.72 | 3.25 | 30.50 | 43.23 | 59.24 | 74.00 | -14.76 | Pk |
| Vertical | 3695.00 | 49.57 | 3.25 | 30.50 | 43.23 | 40.09 | 54.00 | -13.91 | AV |
| Vertical | 10361.26 | 60.97 | 5.62 | 38.96 | 43.41 | 62.13 | 68.20 | -6.07 | Pk |
| Vertical | 15540.59 | 61.01 | 7.54 | 38.98 | 41.24 | 66.29 | 74.00 | -7.71 | Pk |
| Vertical | 15540.59 | 41.03 | 7.54 | 38.98 | 41.24 | 46.31 | 54.00 | -7.69 | AV |
| Horizontal | 3743.89 | 68.84 | 3.26 | 31.12 | 43.23 | 60.00 | 74.00 | -14.00 | Pk |
| Horizontal | 3743.89 | 50.26 | 3.26 | 31.12 | 43.23 | 41.42 | 54.00 | -12.58 | AV |
| Horizontal | 10361.11 | 60.57 | 5.62 | 38.96 | 43.41 | 61.73 | 68.20 | -6.47 | Pk |
| Horizontal | 15540.72 | 56.40 | 7.54 | 38.98 | 41.24 | 61.68 | 74.00 | -12.32 | Pk |
| Horizontal | 15540.72 | 40.19 | 7.54 | 38.98 | 41.24 | 45.47 | 54.00 | -8.53 | AV |
| middle Channel (5200 MHz)-Above 1G | | | | | | | | | |
| Vertical | 3625.01 | 67.48 | 3.22 | 30.26 | 43.24 | 57.72 | 74.00 | -16.28 | Pk |
| Vertical | 3625.01 | 51.15 | 3.22 | 30.26 | 43.24 | 41.39 | 54.00 | -12.61 | AV |
| Vertical | 10401.86 | 60.53 | 5.64 | 38.81 | 43.40 | 61.57 | 68.20 | -6.63 | Pk |
| Vertical | 15601.48 | 59.84 | 7.55 | 39.09 | 41.19 | 65.29 | 74.00 | -8.71 | Pk |
| Vertical | 15601.48 | 40.43 | 7.55 | 39.09 | 41.19 | 45.88 | 54.00 | -8.12 | AV |
| Horizontal | 4203.21 | 64.70 | 3.45 | 32.31 | 43.22 | 57.24 | 74.00 | -16.76 | Pk |
| Horizontal | 4203.21 | 51.35 | 3.45 | 32.31 | 43.22 | 43.89 | 54.00 | -10.11 | AV |
| Horizontal | 10401.51 | 63.38 | 5.64 | 38.81 | 43.40 | 64.42 | 68.20 | -3.78 | Pk |
| Horizontal | 15601.86 | 59.24 | 7.55 | 39.09 | 41.19 | 64.69 | 74.00 | -9.31 | Pk |
| Horizontal | 15601.86 | 40.75 | 7.55 | 39.09 | 41.19 | 46.20 | 54.00 | -7.80 | AV |
| High Channel (5240 MHz)-Above 1G | | | | | | | | | |
| Vertical | 4599.67 | 71.95 | 3.67 | 32.30 | 43.26 | 64.66 | 74.00 | -9.34 | Pk |
| Vertical | 4599.67 | 51.87 | 3.67 | 32.30 | 43.26 | 44.58 | 54.00 | -9.42 | AV |
| Vertical | 10483.12 | 60.02 | 5.68 | 39.21 | 43.38 | 61.53 | 68.20 | -6.67 | Pk |
| Vertical | 15722.61 | 60.98 | 7.56 | 38.22 | 41.09 | 65.67 | 74.00 | -8.33 | Pk |
| Vertical | 15722.61 | 41.58 | 7.56 | 38.22 | 41.09 | 46.27 | 54.00 | -7.73 | AV |
| Horizontal | 4592.00 | 69.48 | 3.67 | 32.37 | 43.26 | 62.26 | 74.00 | -11.74 | Pk |
| Horizontal | 4592.00 | 50.21 | 3.67 | 32.37 | 43.26 | 42.99 | 54.00 | -11.01 | AV |
| Horizontal | 10482.55 | 63.17 | 5.68 | 39.21 | 43.38 | 64.68 | 68.20 | -3.52 | Pk |
| Horizontal | 15722.32 | 59.81 | 7.56 | 38.22 | 41.09 | 64.50 | 74.00 | -9.50 | Pk |
| Horizontal | 15722.32 | 42.79 | 7.56 | 38.22 | 41.09 | 47.48 | 54.00 | -6.52 | AV |

Note:"802.11a" mode is the worst mode.
The amplitude of spurious emissions that are attenuated by more than 20dB below the permissible value has no need to be reported. Emission level (dBuV/m) = 20 log Emission level (uV/m).
Corrected Reading: Antenna Factor + Cable Loss + Read Level - Preamp Factor = Level.

| | | | |
|---|---|---|---|
| EUT： | Mini PC | Model Name. ： | H80 |
| Temperature： | 20 ℃ | Relative Humidity： | 48% |
| Pressure： | 1010 hPa | Test Voltage ： | DC 12V from Adapter AC 120V/60Hz |
| Test Mode ： | TX (5.8G) -- 802.11ac20_5745~5825MHz | | |

| Polar | Frequency | Meter Reading | Cable loss | Antenna Factor | Preamp Factor | Emission Level | Limits | Margin | Detector Type |
|---|---|---|---|---|---|---|---|---|---|
| (H/V) | (MHz) | (dBuV) | (dB) | dB/m | (dB) | (dBuV/m) | (dBuV/m) | (dB) | |
| Low Channel (5745 MHz)-Above 1G | | | | | | | | | |
| Vertical | 5123.37 | 66.52 | 3.91 | 34.12 | 43.28 | 61.27 | 74.00 | -12.73 | Pk |
| Vertical | 5123.37 | 48.01 | 3.91 | 34.12 | 43.28 | 42.76 | 54.00 | -11.24 | AV |
| Vertical | 11491.88 | 61.00 | 6.20 | 39.44 | 43.13 | 63.52 | 74.00 | -10.48 | Pk |
| Vertical | 11491.88 | 44.40 | 6.20 | 39.44 | 43.13 | 46.92 | 54.00 | -7.08 | AV |
| Vertical | 17236.76 | 50.44 | 8.07 | 39.38 | 40.20 | 57.70 | 68.20 | -10.50 | Pk |
| Horizontal | 5167.83 | 61.79 | 3.91 | 34.43 | 43.27 | 56.87 | 68.20 | -11.33 | Pk |
| Horizontal | 11491.73 | 60.03 | 6.20 | 39.44 | 43.13 | 62.55 | 74.00 | -11.45 | Pk |
| Horizontal | 11491.73 | 42.86 | 6.20 | 39.44 | 43.13 | 45.38 | 54.00 | -8.62 | AV |
| Horizontal | 17236.34 | 48.67 | 8.07 | 39.38 | 40.20 | 55.93 | 68.20 | -12.27 | Pk |
| middle Channel (5785 MHz)-Above 1G | | | | | | | | | |
| Vertical | 5134.35 | 66.48 | 3.95 | 34.24 | 43.21 | 61.45 | 74.00 | -12.55 | Pk |
| Vertical | 5134.35 | 46.55 | 3.95 | 34.24 | 43.21 | 41.52 | 54.00 | -12.48 | AV |
| Vertical | 11572.08 | 60.70 | 6.24 | 38.90 | 43.11 | 62.74 | 74.00 | -11.26 | Pk |
| Vertical | 11572.08 | 43.43 | 6.24 | 38.90 | 43.11 | 45.47 | 54.00 | -8.53 | AV |
| Vertical | 17357.38 | 52.94 | 8.11 | 39.93 | 40.30 | 60.68 | 68.20 | -7.52 | Pk |
| Horizontal | 4868.38 | 64.72 | 3.82 | 33.39 | 43.29 | 58.64 | 74.00 | -15.36 | Pk |
| Horizontal | 4868.38 | 48.68 | 3.82 | 33.39 | 43.29 | 42.60 | 54.00 | -11.40 | AV |
| Horizontal | 11572.36 | 63.63 | 6.24 | 38.90 | 43.11 | 65.67 | 74.00 | -8.33 | Pk |
| Horizontal | 11572.36 | 44.87 | 6.24 | 38.90 | 43.11 | 46.91 | 54.00 | -7.09 | AV |
| Horizontal | 17356.23 | 53.65 | 8.11 | 39.92 | 40.30 | 61.39 | 68.20 | -6.81 | Pk |
| High Channel (5825 MHz)-Above 1G | | | | | | | | | |
| Vertical | 5112.21 | 68.69 | 3.92 | 34.12 | 43.25 | 63.48 | 74.00 | -10.52 | Pk |
| Vertical | 5112.09 | 50.70 | 3.92 | 34.12 | 43.09 | 45.65 | 54.00 | -8.35 | AV |
| Vertical | 11652.01 | 60.40 | 6.29 | 38.80 | 43.09 | 62.41 | 74.00 | -11.59 | Pk |
| Vertical | 11652.01 | 44.36 | 6.29 | 38.80 | 40.39 | 49.06 | 54.00 | -4.94 | AV |
| Vertical | 17473.41 | 55.16 | 8.15 | 40.98 | 40.39 | 63.89 | 68.20 | -4.31 | Pk |
| Horizontal | 5118.66 | 66.75 | 3.92 | 34.12 | 43.25 | 61.54 | 74.00 | -12.46 | Pk |
| Horizontal | 5118.66 | 47.84 | 3.92 | 34.12 | 43.25 | 42.63 | 54.00 | -11.37 | AV |
| Horizontal | 11653.04 | 60.24 | 6.29 | 38.80 | 43.09 | 62.25 | 74.00 | -11.75 | Pk |
| Horizontal | 11653.04 | 45.62 | 6.29 | 38.80 | 43.09 | 47.62 | 54.00 | -6.38 | AV |
| Horizontal | 17475.89 | 55.02 | 8.15 | 40.98 | 40.39 | 63.75 | 68.20 | -4.45 | Pk |

Note:"802.11ac20" mode is the worst mode.
The amplitude of spurious emissions that are attenuated by more than 20dB below the permissible value has no need to be reported.
Emission level (dBuV/m) = 20 log Emission level (uV/m).
Corrected Reading: Antenna Factor + Cable Loss + Read Level - Preamp Factor = Level.

### 3.2.9 TEST RESULTS (18GHz-40GHz)

| | | | |
|---|---|---|---|
| EUT： | Mini PC | Model Name. ： | H80 |
| Temperature： | 20 ℃ | Relative Humidity： | 48% |
| Pressure： | 1010 hPa | Test Voltage ： | DC 12V from Adapter AC 120V/60Hz |
| Test Mode ： | TX (5.8G) -- 802.11ac20_5825MHz | | |

| Polar | Frequency | Meter Reading | Cable loss | Antenna Factor | Preamp Factor | Emission Level | Limits | Margin | Detector Type |
|---|---|---|---|---|---|---|---|---|---|
| (H/V) | (MHz) | (dBuV) | (dB) | dB/m | (dB) | (dBuV/m) | (dBuV/m) | (dB) | |
| Low Channel (5745 MHz)-Above 1G | | | | | | | | | |
| Vertical | 39676.31 | 38.64 | 20.06 | 44.07 | 43.21 | 59.56 | 68.2 | -8.64 | Pk |
| Horizontal | 39675.06 | 39.27 | 20.09 | 44.16 | 43.48 | 60.04 | 68.2 | -8.16 | Pk |

Note:”802.11ac20” mode is the worst mode.
The amplitude of spurious emissions that are attenuated by more than 20dB below the permissible value has no need to be reported.
Emission level (dBuV/m) = 20 log Emission level (uV/m).
Corrected Reading: Antenna Factor + Cable Loss + Read Level - Preamp Factor = Level.

3.2.10 Spurious Emission in Restricted Band 4.5GHz~5.150 GHz& 5.350GHz~5460GHz

| | | | |
|---|---|---|---|
| EUT： | Mini PC | Model Name. ： | H80 |
| Temperature： | 20 ℃ | Relative Humidity： | 48% |
| Pressure： | 1010 hPa | Test Voltage ： | DC 12V from Adapter AC 120V/60Hz |
| Test Mode ： | TX (5.2G)-802.11a 5150MHz~5250MHz, | | |

All the modulation modes have been tested, The report just record the worst data mode.

Vertical Low Channel (5180 MHz)-Above 1G

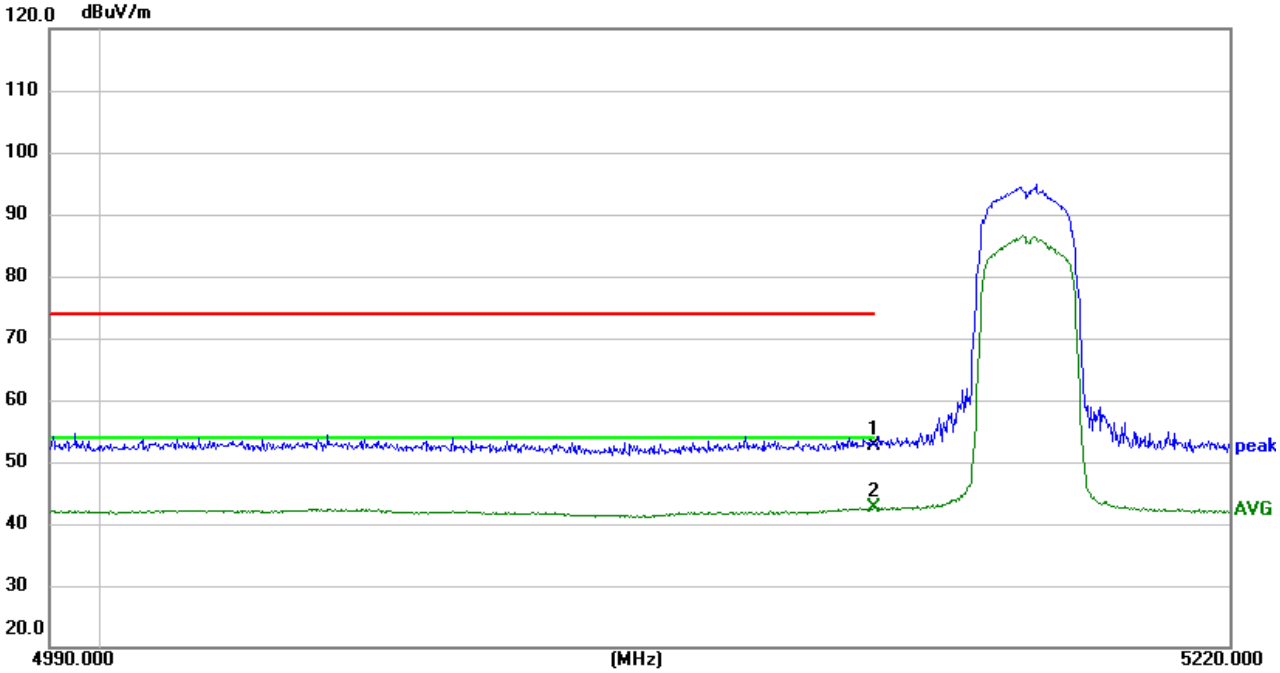


| No. | Frequency (MHz) | Reading (dBµv/m) | Factor (dB) | Level (dBµv/m) | Limit (dBµv/m) | Margin (dB) | Det. |
|---|---|---|---|---|---|---|---|
| 1 | 5150.000 | 52.61 | 0.10 | 52.71 | 74.00 | -21.29 | peak |
| 2 | 5150.000 | 42.44 | 0.10 | 42.54 | 54.00 | -11.46 | AVG |

Vertical Low Channel (5180 MHz)-Above 1G

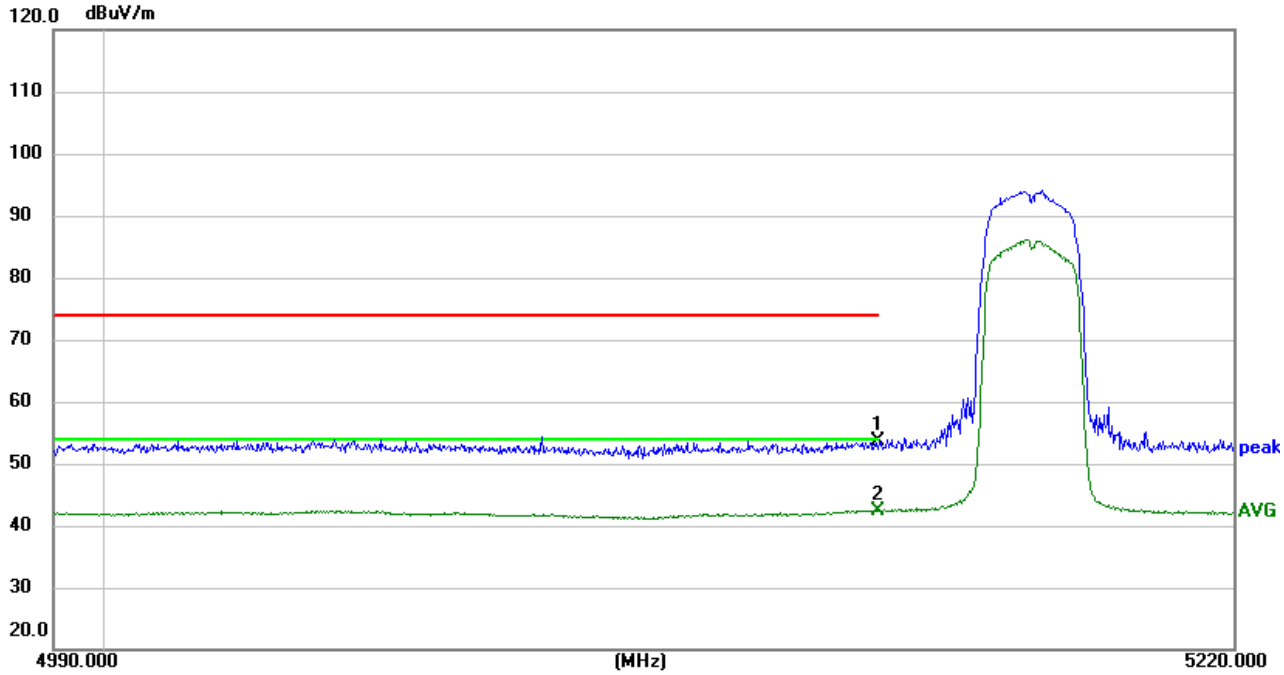


| No. | Frequency (MHz) | Reading (dBµv/m) | Factor (dB) | Level (dBµv/m) | Limit (dBµv/m) | Margin (dB) | Det. |
|---|---|---|---|---|---|---|---|
| 1 | 5150.000 | 53.65 | 0.10 | 53.75 | 74.00 | -20.25 | peak |
| 2 | 5150.000 | 42.32 | 0.10 | 42.42 | 54.00 | -11.58 | AVG |

Vertical High Channel (5240 MHz)-Above 1G

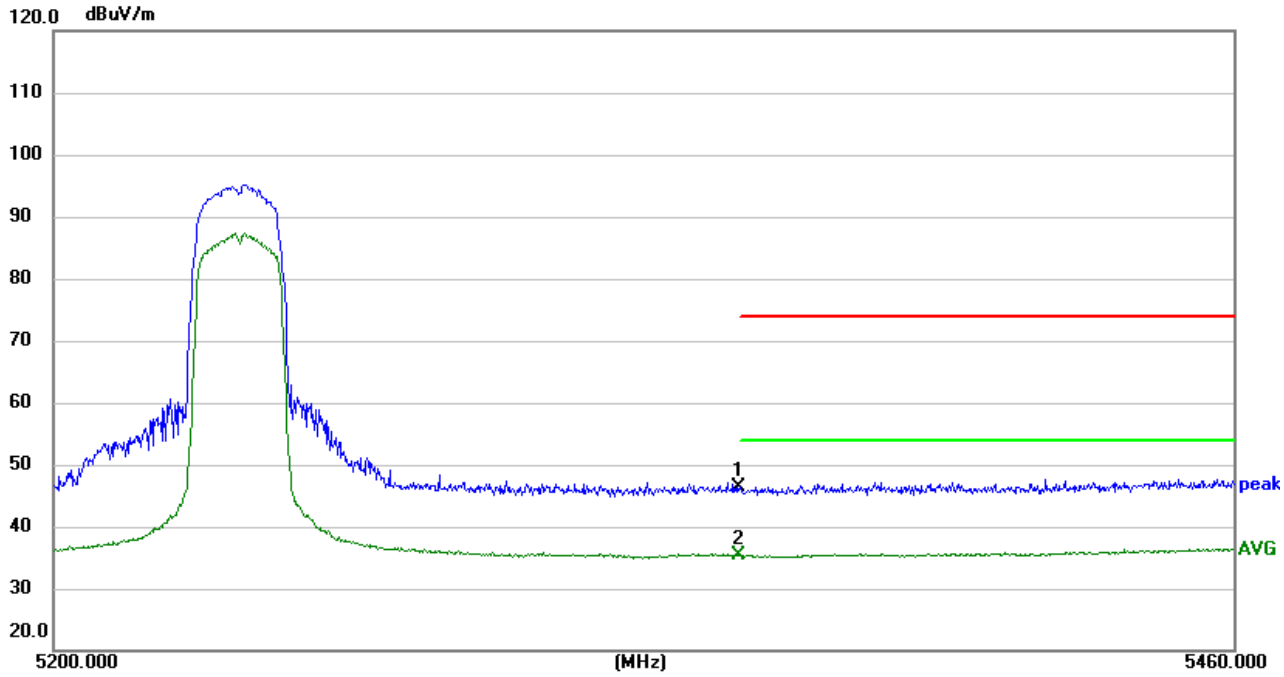


| No. | Frequency (MHz) | Reading (dBµv/m) | Factor (dB) | Level (dBµv/m) | Limit (dBµv/m) | Margin (dB) | Det. |
|---|---|---|---|---|---|---|---|
| 1 | 5350.000 | 53.23 | -6.79 | 46.44 | 74.00 | -27.56 | peak |
| 2 | 5350.000 | 42.11 | -6.79 | 35.32 | 54.00 | -18.68 | AVG |

Horizontal High Channel (5240 MHz)-Above 1G

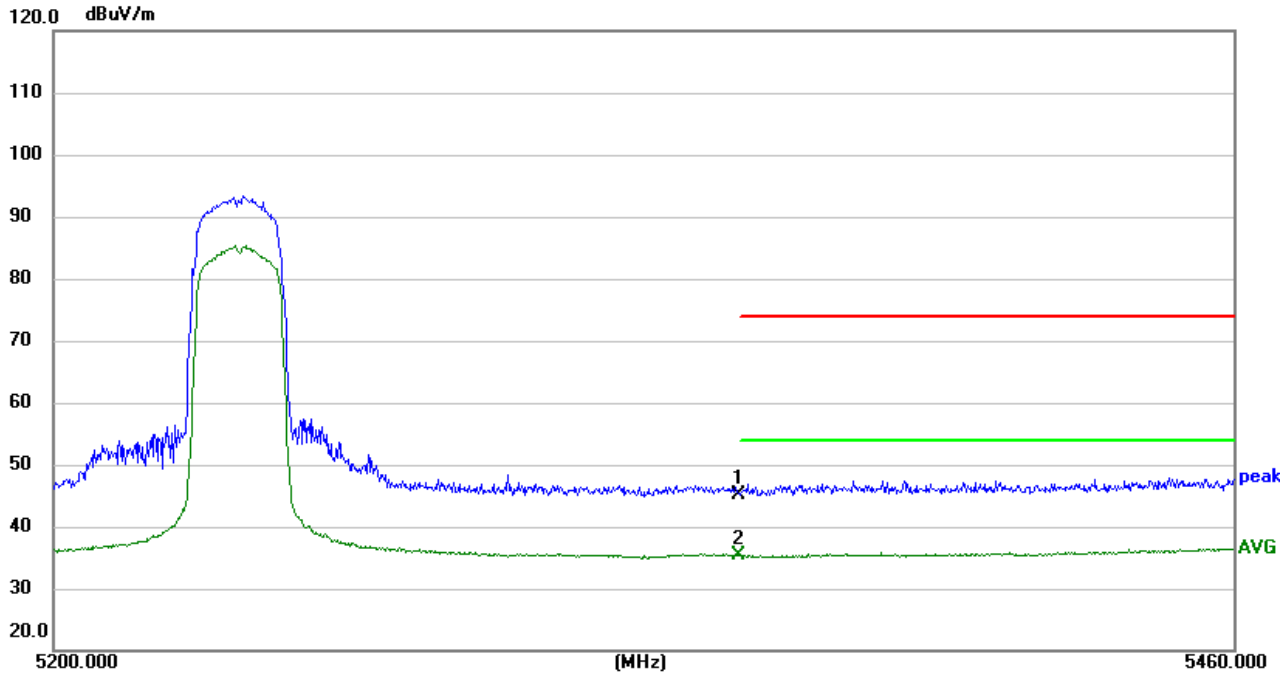


| No. | Frequency (MHz) | Reading (dBµv/m) | Factor (dB) | Level (dBµv/m) | Limit (dBµv/m) | Margin (dB) | Det. |
|---|---|---|---|---|---|---|---|
| 1 | 5350.000 | 51.86 | -6.79 | 45.07 | 74.00 | -28.93 | peak |
| 2 | 5350.000 | 42.13 | -6.79 | 35.34 | 54.00 | -18.66 | AVG |

Note:
(1) Emission Level= Antenna Factor + Cable Loss + Read Level - Preamp Factor
(2) “802.11a ” mode is the worst mode. When PK value is lower than the Average value limit, average don't record.

Unwanted emission for operating in the band 5725-5850 MHz

| | | | |
|---|---|---|---|
| EUT： | Mini PC | Model Name. ： | H80 |
| Temperature： | 20 ℃ | Relative Humidity： | 48% |
| Pressure： | 1010 hPa | Test Voltage ： | DC 12V from Adapter AC 120V/60Hz |
| Test Mode ： | TX (5.8G)-802.11a 5745MHz~5825MHz | | |

All the modulation modes have been tested, The report just record the worst data mode.

Horizontal Low Channel (5745 MHz)-Above 1G

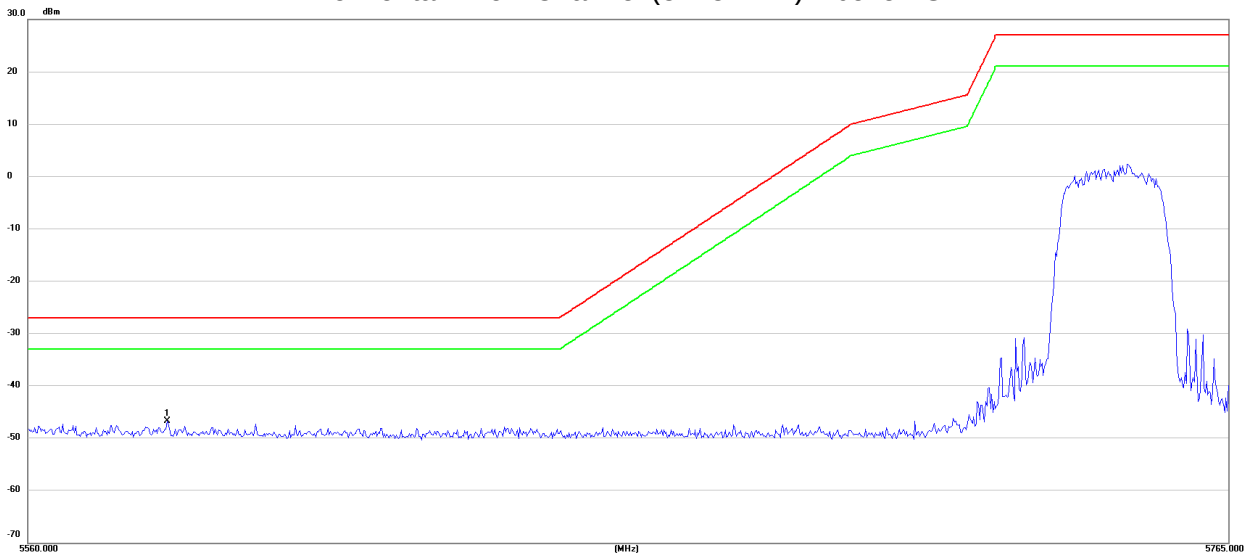


| No. | Frequency (MHz) | Reading (dBm) | Factor (dB) | Level (dBm) | Limit (dBm) | Margin (dB) | Det. |
|---|---|---|---|---|---|---|---|
| 1 | 5582.68 | -52.65 | 5.98 | -46.67 | -27 | -19.67 | peak |

Horizontal Low Channel (5745 MHz)-Above 1G

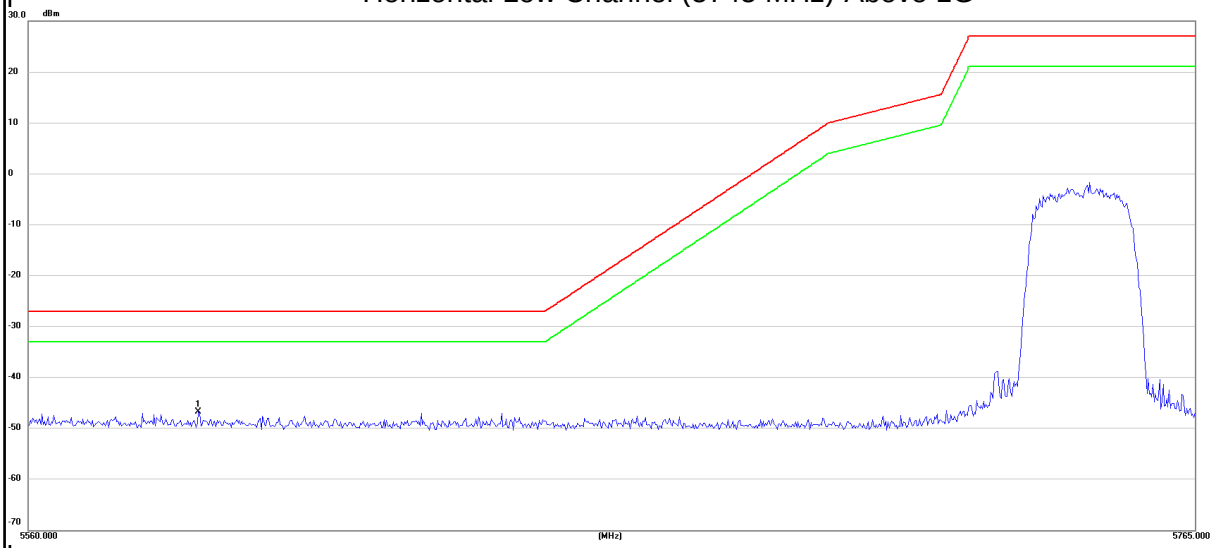


| No. | Frequency (MHz) | Reading (dBm) | Factor (dB) | Level (dBm) | Limit (dBm) | Margin (dB) | Det. |
|---|---|---|---|---|---|---|---|
| 1 | 5589.29 | -51.87 | 5.95 | -45.92 | -27 | -18.96 | peak |

Vertical High Channel (5825 MHz)-Above 1G

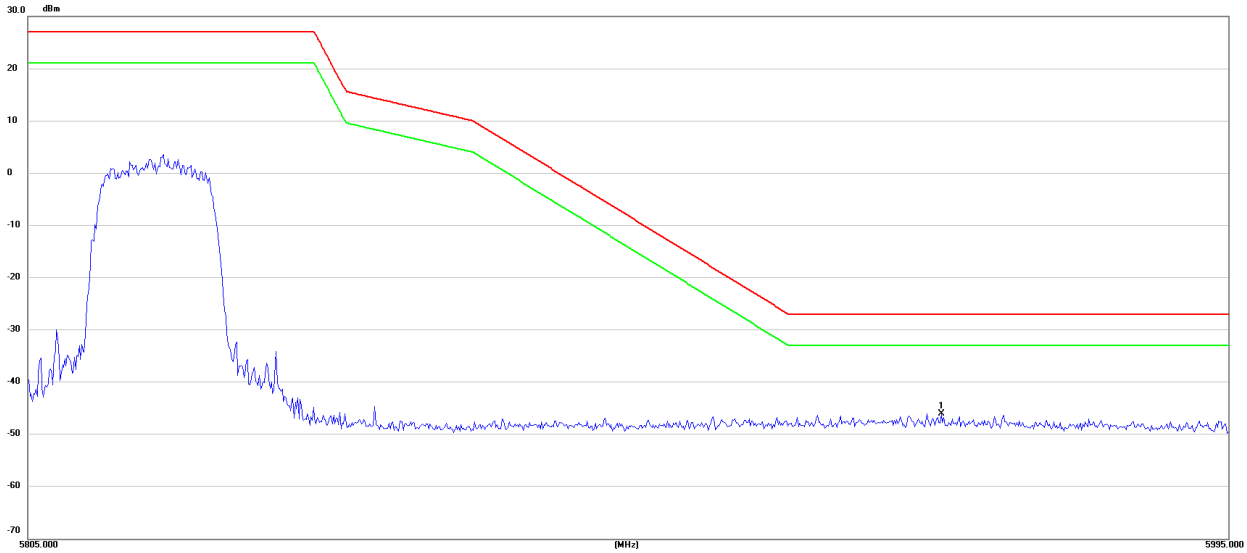


| No. | Frequency (MHz) | Reading (dBm) | Factor (dB) | Level (dBm) | Limit (dBm) | Margin (dB) | Det. |
|---|---|---|---|---|---|---|---|
| 1 | 5949.65 | -53.66 | 7.42 | -46.24 | -27 | -19.30 | peak |

Horizontal High Channel (5825 MHz)-Above 1G

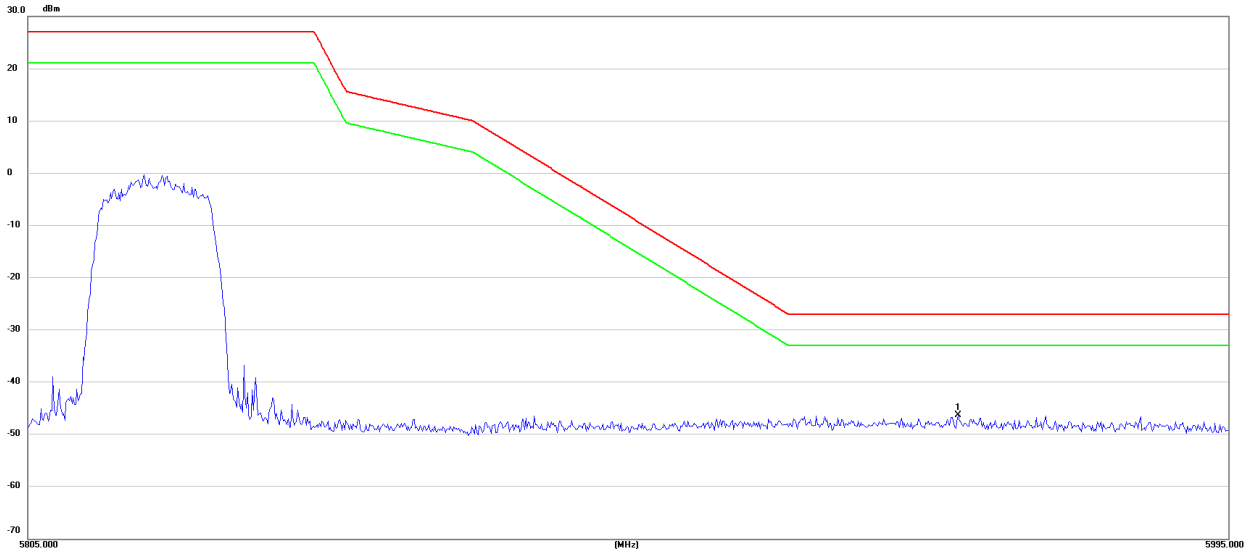


| No. | Frequency (MHz) | Reading (dBm) | Factor (dB) | Level (dBm) | Limit (dBm) | Margin (dB) | Det. |
|---|---|---|---|---|---|---|---|
| 1 | 5951.48 | -53.65 | 7.38 | -46.27 | -27 | -19.27 | peak |

## 3.3 POWER SPECTRAL DENSITY TEST

### 3.3.1 Applied procedures / limit

**According to FCC §15.407(a)(1)(3)**

For the band 5.15-5.25 GHz,

(i) For an outdoor access point operating in the band 5.15-5.25 GHz, the maximum power spectral density shall not exceed 17 dBm in any 1 megahertz band. If transmitting antennas of directional gain greater than 6 dBi are used, both the maximum conducted output power and the maximum power spectral density shall be reduced by the amount in dB that the directional gain of the antenna exceeds 6 dBi. The maximum e.i.r.p. at any elevation angle above 30 degrees as measured from the horizon must not exceed 125 mW (21 dBm).

(ii) For an indoor access point operating in the band 5.15-5.25 GHz, the maximum power spectral density shall not exceed 17 dBm in any 1 megahertz band. If transmitting antennas of directional gain greater than 6 dBi are used, both the maximum conducted output power and the maximum power spectral density shall be reduced by the amount in dB that the directional gain of the antenna exceeds 6 dBi.

(iii) For fixed point-to-point access points operating in the band 5.15-5.25 GHz, the maximum power spectral density shall not exceed 17 dBm in any 1 megahertz band. Fixed point-to-point U-NII devices may employ antennas with directional gain up to 23 dBi without any corresponding reduction in the maximum conducted output power or maximum power spectral density. For fixed point-to-point transmitters that employ a directional antenna gain greater than 23 dBi, a 1 dB reduction in maximum conducted output power and maximum power spectral density is required for each 1 dB of antenna gain in excess of 23 dBi. Fixed, point-to-point operations exclude the use of point-to-multipoint systems, omnidirectional applications, and multiple collocated transmitters transmitting the same information. The operator of the U-NII device, or if the equipment is professionally installed, the installer, is responsible for ensuring that systems employing high gain directional antennas are used exclusively for fixed, point-to-point operations.

(iv) For client devices in the 5.15-5.25 GHz band, the maximum power spectral density shall not exceed 11 dBm in any 1 megahertz band. If transmitting antennas of directional gain greater than 6 dBi are used, both the maximum conducted output power and the maximum power spectral density shall be reduced by the amount in dB that the directional gain of the antenna exceeds 6 dBi.

For the band 5.725-5.85 GHz

(3)For the band 5.725-5.85 GHz, the maximum power spectral density shall not exceed 30 dBm in any 500-kHz band. If transmitting antennas of directional gain greater than 6 dBi are used, both the maximum conducted output power and the maximum power spectral density shall be reduced by the amount in dB that the directional gain of the antenna exceeds 6 dBi.

,

### 3.3.2 TEST PROCEDURE

For devices operating in the bands 5.15-5.25 GHz, 5.25-5.35 GHz, and 5.47-5.725 GHz, the above procedures make use of 1 MHz RBW to satisfy directly the 1 MHz reference bandwidth specified in § 15.407(a)(5). For devices operating in the band 5.725-5.85 GHz, the rules specify a measurement bandwidth of 500 kHz. Many spectrum analyzers do not have 500 kHz RBW, thus a narrower RBW may need to be used. The rules permit the use of a RBWs less than 1 MHz, or 500 kHz, "provided that the measured power is integrated over the full reference bandwidth" to show the total power over the specified measurement bandwidth (i.e., 1 MHz, or 500 kHz). If measurements are performed using a reduced resolution bandwidth (< 1 MHz, or < 500 kHz) and integrated over 1 MHz, or 500 KHz bandwidth, the following adjustments to the procedures apply:

a) Measure the duty cycle D of the transmitter output signal as described in 12.2.

b) Set span to encompass the entire 26 dB EBW or 99% OBW of the signal.

c) Set RBW = 1 MHz.

d) Set VBW ⩾ 3 MHz.

e) Number of points in sweep ⩾ [2 × span / RBW]. (This gives bin-to-bin spacing ⩽ RBW / 2, so that narrowband signals are not lost between frequency bins.)

f) Sweep time = auto.

g) Detector = RMS (i.e., power averaging), if available. Otherwise, use sample detector mode.

h) Do not use sweep triggering. Allow the sweep to "free run."

i) Trace average at least 100 traces in power averaging (rms) mode; however, the number of traces to be averaged shall be increased above 100 as needed such that the average accurately represents the true average over the ON and OFF periods of the transmitter.

j) Compute power by integrating the spectrum across the 26 dB EBW or 99% OBW of the signal using the instrument's band power measurement function with band limits set equal to the EBW or OBW band edges. If the instrument does not have a band power function, then sum the spectrum levels (in power units) at 1 MHz intervals extending across the 26 dB EBW or 99% OBW of the spectrum.

k) Add [10 log (1 / D)], where D is the duty cycle, to the measured power to compute the average power during the actual transmission times (because the measurement represents an average over both the ON and OFF times of the transmission). For example, add [10 log (1 / 0.25)] = 6 dB if the duty cycle is 25%.

Note: As a practical matter, it is recommended to use reduced RBW of 100 KHz for the sections 5.c) and 5.d) above, since RBW=100 KHZ is available on nearly all spectrum analyzers.

### 3.3.3 DEVIATION FROM STANDARD

No deviation.

### 3.3.4 TEST SETUP

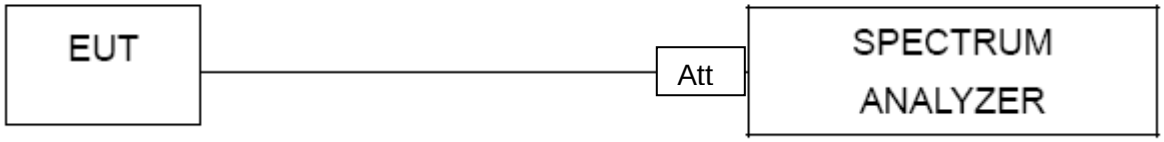


### 3.3.5 EUT OPERATION CONDITIONS

The EUT tested system was configured as the statements of 2.1 Unless otherwise a special operating condition is specified in the follows during the testing.

### 3.3.6 **TEST RESULTS**

| | | | |
|---|---|---|---|
| EUT： | Mini PC | Model Name. ： | H80 |
| Temperature： | 25 ℃ | Relative Humidity： | 56% |
| Pressure： | 1015 hPa | Test Voltage ： | DC 12V |
| Test Mode ： | TX Frequency Band I (5150-5250MHz), Band IV (5725-5850MHz) | | |

Test data reference attachment.

## 3.4 26DB & 99% EMISSION BANDWIDTH

### 3.4.1 Applied procedures / limit

The maximum power spectral density is measured as a conducted emission by direct connection of a calibrated test instrument to the equipment under test. If the device cannot be connected directly, alternative techniques acceptable to the Commission may be used. Measurements in the 5.725-5.85 GHz band are made over a reference bandwidth of 500 kHz or the 26 dB emission bandwidth of the device, whichever is less. Measurements in the 5.15-5.25 GHz, 5.25-5.35 GHz, and the 5.47-5.725 GHz bands are made over a bandwidth of 1 MHz or the 26 dB emission bandwidth of the device, whichever is less. A narrower resolution bandwidth can be used, provided that the measured power is integrated over the full reference bandwidth.

### 3.4.2 TEST PROCEDURE

a) Set RBW = Set RBW = shall be in the range of 1% to 5% of the emission bandwidth.
b) Set the VBW > RBW.
c) Detector = Peak.
d) Trace mode = max hold.
e) Measure the maximum width of the emission that is 26 dB down from the maximum of the emission. Compare this with the RBW setting of the analyzer. Readjust RBW and repeat measurement as needed until the RBW/EBW ratio is in the range of 1% to 5%.

The following procedure shall be used for measuring (99 %) power bandwidth:

1. Set center frequency to the nominal EUT channel center frequency.
2. Set span = 1.5 times to 5.0 times the OBW.
3. Set RBW = 1 % to 5 % of the OBW
4. Set VBW ≥ 3 · RBW
5. Video averaging is not permitted. Where practical, a sample detection and single sweep mode shall be used. Otherwise, peak detection and max hold mode (until the trace stabilizes) shall be used.
6. Use the 99 % power bandwidth function of the instrument (if available).
7. If the instrument does not have a 99 % power bandwidth function, the trace data points are recovered and directly summed in power units. The recovered amplitude data points, beginning at the lowest frequency, are placed in a running sum until 0.5 % of the total is reached; that frequency is recorded as the lower frequency. The process is repeated until 99.5 % of the total is reached; that frequency is recorded as the upper frequency. The 99% occupied bandwidth is the difference between these two frequencies.

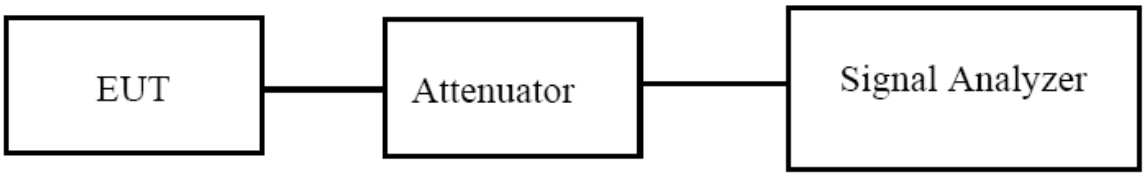

### 3.4.3 EUT OPERATION CONDITIONS

The EUT tested system was configured as the statements of 2.4 Unless otherwise a special operating condition is specified in the follows during the testing.

### 3.4.4 TEST RESULTS

| | | | |
|---|---|---|---|
| EUT： | Mini PC | Model Name. ： | H80 |
| Temperature： | 25 ℃ | Relative Humidity： | 56% |
| Pressure： | 1012 hPa | Test Voltage ： | DC 12V |
| Test Mode ： | TX Frequency Band I (5150-5250MHz), Band IV (5725-5850MHz) | | |

Test data reference attachment.

## 3.5 MINIMUM 6 DB BANDWIDTH

### 3.5.1 Applied procedures / limit

**According to FCC §15.407(e)**
(e) Within the 5.725-5.85 GHz band, the minimum 6 dB bandwidth of U-NII devices shall be at least 500 kHz.

### 3.5.2 TEST PROCEDURE

Section 15.407(e) specifies the minimum 6 dB emission bandwidth of at least 500 KHz for the band 5.715-5.85 GHz. The following procedure shall be used for measuring this bandwidth:

a) Set RBW = 100 kHz.

b) Set the video bandwidth (VBW) ≥ 3 × RBW.

c) Detector = Peak.

d) Trace mode = max hold.

e) Sweep = auto couple.

f) Allow the trace to stabilize.

g) Measure the maximum width of the emission that is constrained by the frequencies associated with the two outermost amplitude points (upper and lower frequencies) that are attenuated by 6 dB relative to the maximum level measured in the fundamental emission.

### 3.5.3 DEVIATION FROM STANDARD

No deviation.

### 3.5.4 TEST SETUP

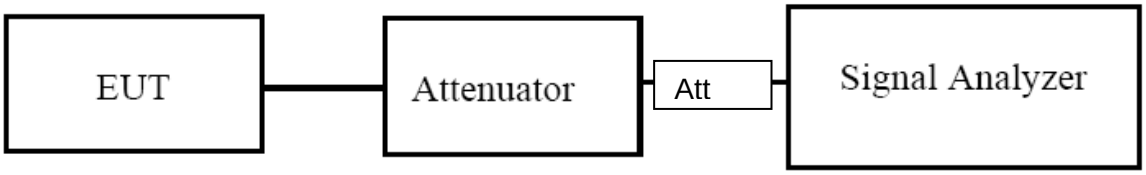


### 3.5.5 EUT OPERATION CONDITIONS

The EUT tested system was configured as the statements of 2.4 Unless otherwise a special operating condition is specified in the follows during the testing.

### 3.5.6 TEST RESULTS

| | | | |
|---|---|---|---|
| EUT： | Mini PC | Model Name. ： | H80 |
| Temperature： | 25 ℃ | Relative Humidity： | 60% |
| Pressure： | 1012 hPa | Test Voltage ： | DC 12V |
| Test Mode ： | TX (5G) Mode Frequency Band IV (5725-5850MHz) | | |

Test data reference attachment.

## 3.6 MAXIMUM CONDUCTED OUTPUT POWER

### 3.6.1 PPLIED PROCEDURES / LIMIT

**According to FCC §15.407**

The maximum conduced output power should not exceed:

| Frequency Band(MHz) | Limit |
|---|---|
| 5150~5250 | 250mW |
| 5725~5850 | 1W |

### 3.6.2 TEST PROCEDURE

Method PM-G is measurement using a gated RF average power meter. Measurements may be performed using a wideband gated RF power meter provided that the gate parameters are adjusted such that the power is measured only when the EUT is transmitting at its maximum power control level. Because the measurement is made only during the ON time of the transmitter, no dutycycle correction factor is required.

### 3.6.3 DEVIATION FROM STANDARD

No deviation.

### 3.6.4 TEST SETUP

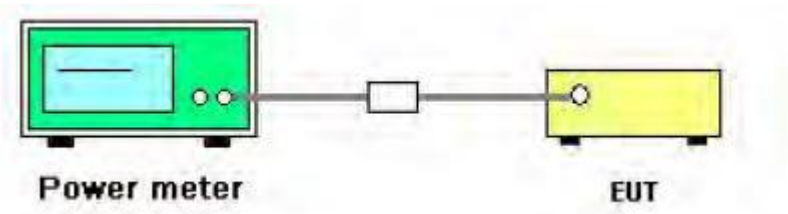


### 3.6.5 EUT OPERATION CONDITIONS

The EUT tested system was configured as the statements of 2.4 Unless otherwise a special operating condition is specified in the follows during the testing.

### 3.6.6 TEST RESULTS

| | | | |
|---|---|---|---|
| EUT： | Mini PC | Model Name. ： | H80 |
| Temperature： | 25 ℃ | Relative Humidity： | 60% |
| Pressure： | 1012 hPa | Test Voltage ： | DC 12V |
| Test Mode ： | TX (5G) Mode Frequency Band I (5150-5250MHz), Band IV (5725-5850MHz) | | |

Test data reference attachment.

## 3.7 FREQUENCY STABILITY MEASUREMENT

### 3.7.1 LIMIT

Manufactures of U-NII devices are responsible for ensuring frequency stability such that an emission is maintained within the band of operation under all conditions of normal operation as specified in the user's manual.

### 3.7.2 TEST PROCEDURES

1. The transmitter output (antenna port) was connected to the spectrum analyzer.
2. EUT have transmitted absence of modulation signal and fixed channelize.
3. Set the spectrum analyzer span to view the entire absence of modulation emissions bandwidth.
4. Set RBW = 10 kHz, VBW = 10 kHz with peak detector and maxhold settings.
5. fc is declaring of channel frequency. Then the frequency error formula is $(fc-f)/fc \times 10^6$ ppm .
6. The test extreme voltage is to change the primary supply voltage from 85 to 115 percent of the nominal value
7. Extreme temperature is -20°C~70°C.

### 3.7.3 TEST SETUP LAYOUT

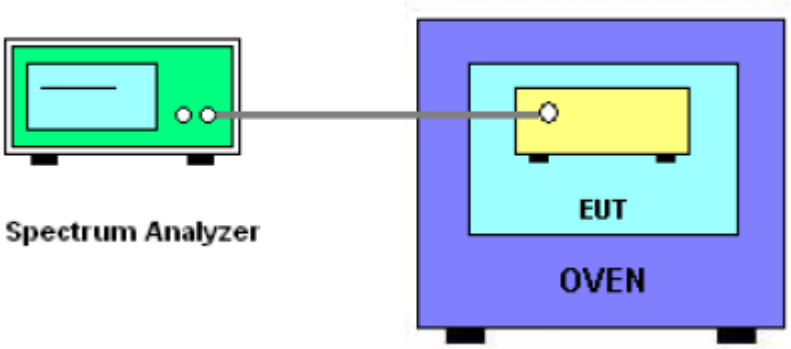


### 3.7.4 EUT OPERATION DURING TEST

The EUT was programmed to be in continuously un-modulation transmitting mode.

3.7.5 TEST RESULTS

According to KDB 789033 D02 General UNII Test Procedures New Rules v02r01
The applications for equipment certification are not required to include test reports with explicit demonstration of compliance

# 4. ANTENNA REQUIREMENT

## 4.1 STANDARD REQUIREMENT

15.203 requirement: For intentional device, according to 15.203: an intentional radiator shall be designed to ensure that no antenna other than that furnished by the responsible party shall be used with the device.

## 4.2 EUT ANTENNA

The EUT antenna is permanent attached FPC antenna (antenna gain: band I : 2.02dBi; band IV: 2.02dBi). It comply with the standard requirement.

END OF REPORT