Smart phone Gimbal

User Manual

Model No. **DSG-009F AI**

CONTENT

About APP 01
Quick Start 02
Built in Extension Rod 04
Get to Know the Gimbal..... 05
Operate Instruction 07
Others 09
Charging 10
Product Specification..... 11
Caution 12
Storage & Maintenance 12

About APP

This gimbal support capturing pictures/taking videos by native camera when connect to the Bluetooth. Any special photography request like Inception, Dolly zoom, Panoramic need be realized in APP

Download the APP

Way 1:

iOS smartphone search the “Gimbal Pro" on Apple Store;
Android smartphone search the “Gimbal Pro 2" on Play Store;

Way 2:

Scan below QR code to download and install.

(Support both iOS and Android)

Tips: The app supports iOS 12.0 and higher or Android 8.0 and higher.

Connect with the Smartphone

1. Activate Bluetooth on your Smartphone
2. Switch ON **DSG-009F AI** / **DSG-009F** Gimbal
3. Open the APP and search for available Bluetooth devices, select the device name “GP9_XX", the connection will be established automatically.

Quick Start

This product supports switching on without a smartpone, and allows the phone to be removed even during use, e.g. when you receive a call.

1. Install the Tripod to Gimbal

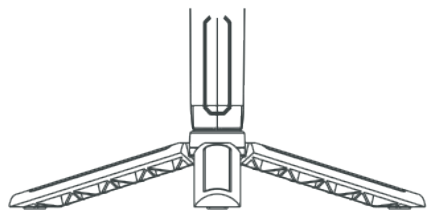

2. Insert the smartphone on gimbal according to the direction of the red arrow, remove the smartphone case before inserting, make sure the holder is at the middle of smartphone.

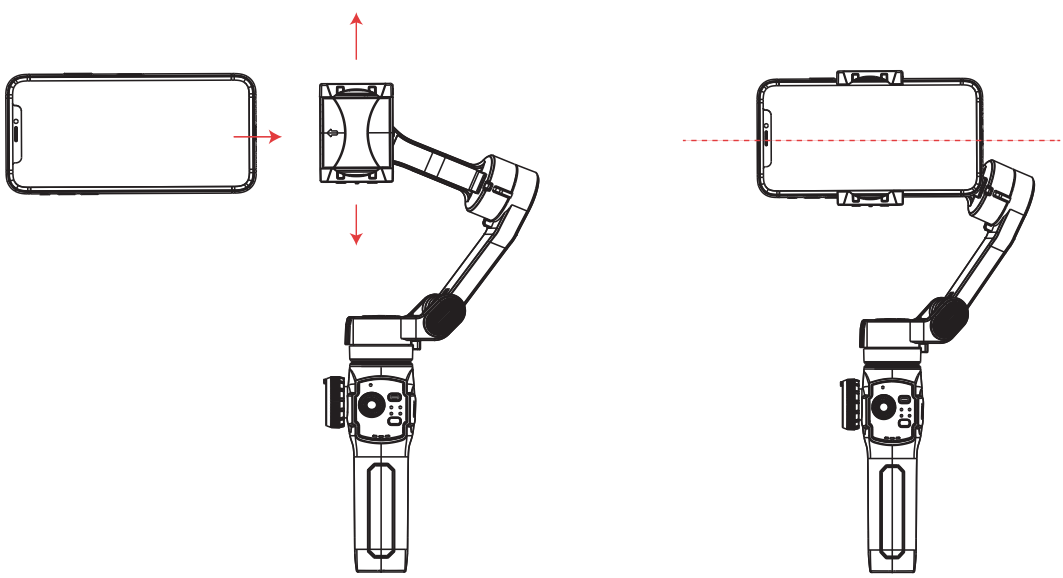

3. Long press the power button to switch on

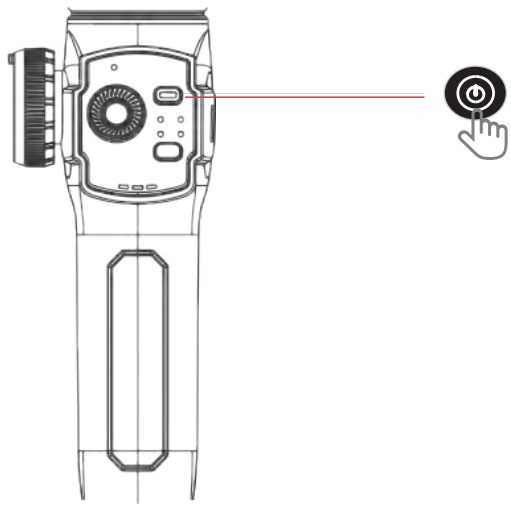

Note:
Please make sure that Smartphone is firmly attached to prevent vibration or jerking of the Gimbal. If any part of the Gimbal appears in the shot, push the smartphone slightly away from the tilt motor until gimbal is no longer visible in the picture.

Built in Extension Rod

1.Picture: easy to get good selfie angle
2.Video: capture varies angles scenery like high, level and low angle
3.Specification: 3 sections with 170mm length

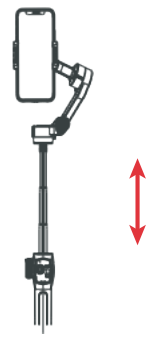

4.The extension rod has a fixed folding direction, do not apply force in reverse or transverse direction to damage the rod

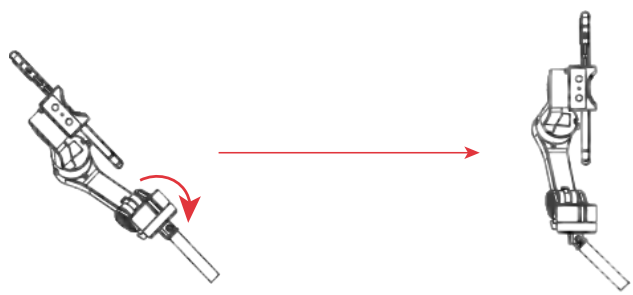

5.If the folding position is loose after long-term use, the standard hexagon socket tool can be used for fastening

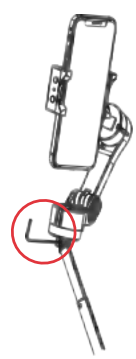

Get to Know the Foldable Gimbal

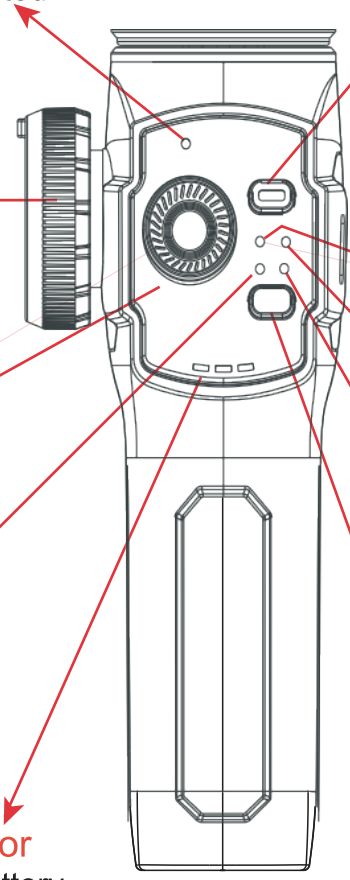

Bluetooth Indicator

Slow flashing: bluetooth is not connected
Fast flashing: bluetooth is connecting
Light is on: bluetooth is connected

Power Button

Long Press: Power On/Off
Single Press: Switch between Front/Rear camera(Bluetooth is connected and work in APP)
Twice press: Switch between photo/video mode(Bluetooth is connected and work in APP)

Wheel Zoom

Turn the knob to enlarge/reduce the screen

FPV(First Person View)

Tilt/Pan/Roll axis follow

Joystick

Control the smartphone up/down right/left movement

AF: All Follow

Tilt/Pan axis follows, Roll axis is locked

LF: Lock Full

Tilt/Pan/Roll axis are locked

HF: Half Follow

Pan axis follow, Tilt/Roll axis are locked

Battery Indicator

First light is on: 1%-33% battery
Two lights are on:34%-65% battery
Three lights are on: 66%-100% battery

Mode Button

Single press: switch between four modes
Twice press: switch between portrait landscape mode
Triple press: centre the smartphone

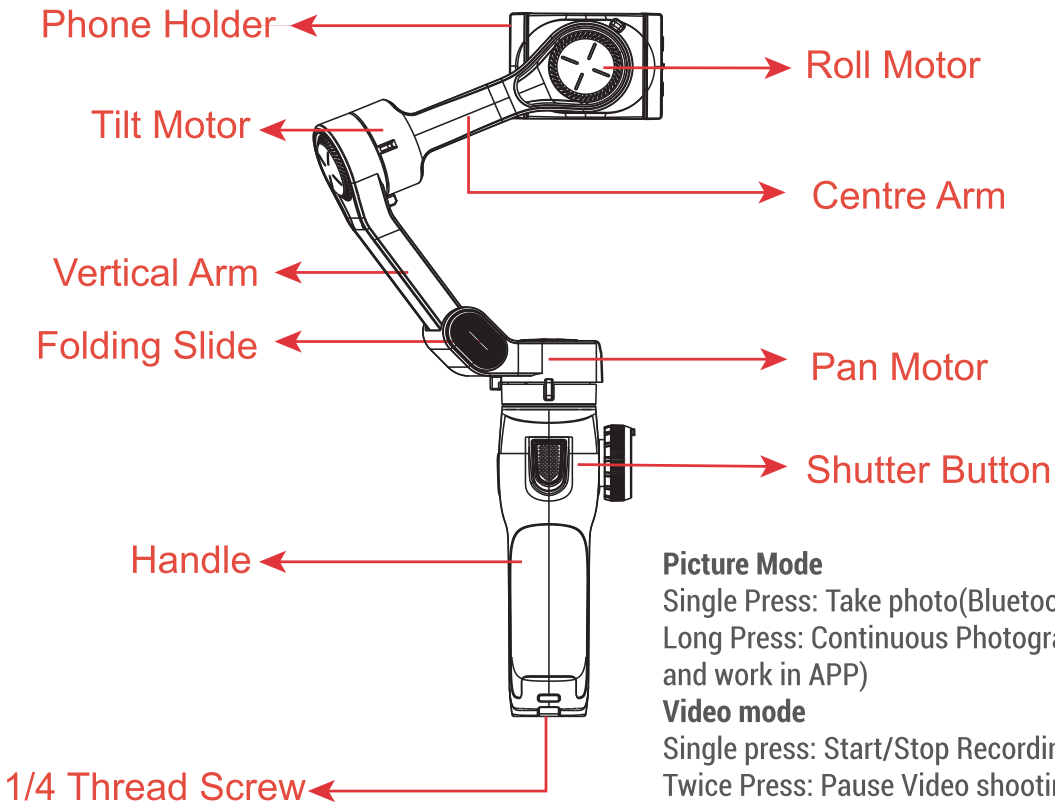

Picture Mode
Single Press: Take photo(Bluetooth is connected)
Long Press: Continuous Photography (Bluetooth is connected and work in APP)
Video mode
Single press: Start/Stop Recording (Bluetooth is Connected)
Twice Press: Pause Video shooting, Twice Press again to Recover Shooting (Bluetooth is connected and work in APP)
Triple press: Capture Photos during recording (Bluetooth is connected and work in APP)

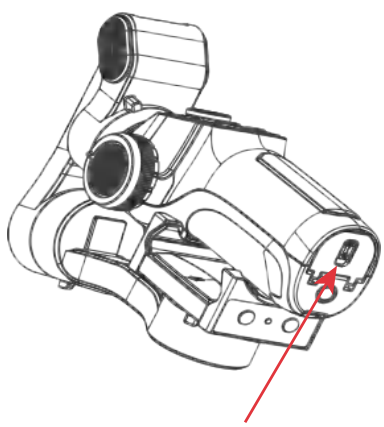

The Battery is Replaceable
Pull the Dock to open the Cover

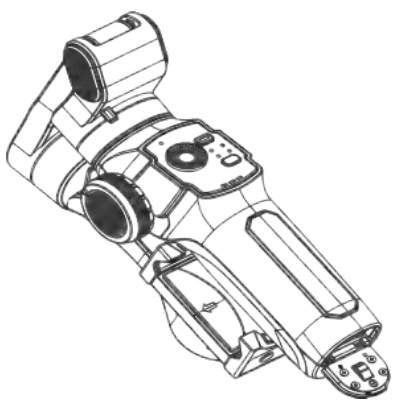

The Battery Cover is opened
It is Recommended to Purchase Original Batteries

Operation Instruction

All Follow (AF) - The Roll Axis is locked, the PAN (Left / Right) & Tilt (Up / Down) will follow the movement of Handle.

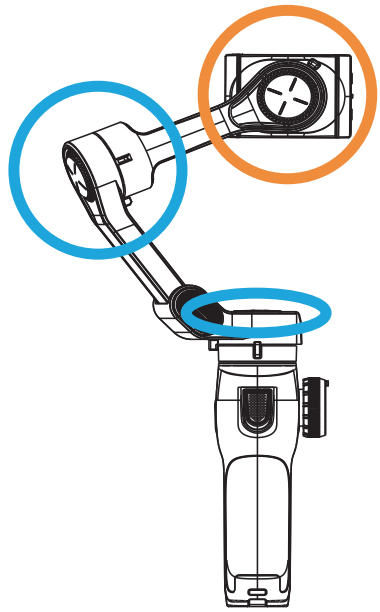

Half Follow (HF) - Tilt & Roll are locked, the PAN axis rotates (Left/ Right) smoothly with the Handle.

※ Default mode upon Powering ON

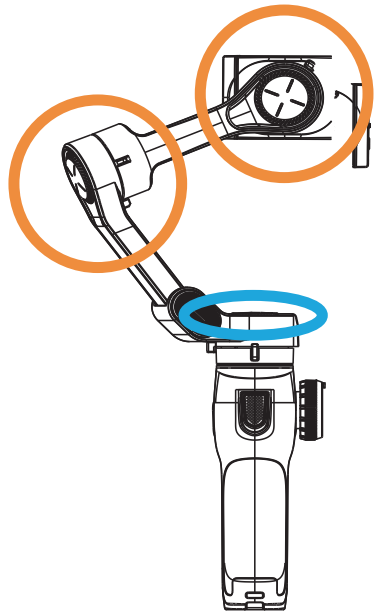

Lock Full (LF) - Pan Tilt Roll Axis are locked. The Camera remains Still & Stable, which means Camera can not follow the movement of the handle.

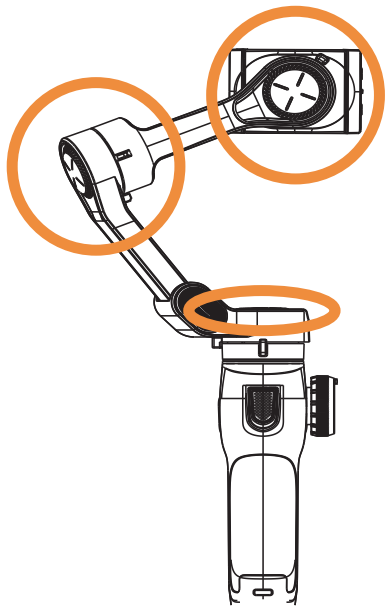

First Person View (FPV) - PAN, Tilt, Roll axis follow the movement of the handle

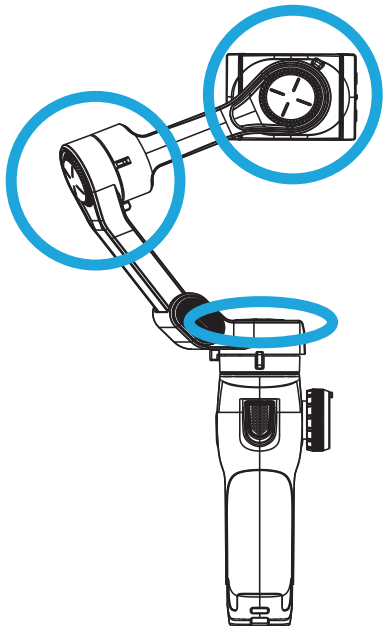

Others

Combine Button

Press the Shutter Button and Power Button at the same time, reset the Bluetooth name to disconnect from previous phone, new phone can do quick connect.

Work Mode

Works with both Landscape & Portrait modes

Underslung Mode

Hold the Gimbal Upside Down to enter Underslung Mode, in order to Capture images from Low Position

Side Grip Mode

Rotate Gimbal to the Right or Left by 90^0 to go from Upright to Side Grip mode. Works with both Landscape and Portrait Modes.

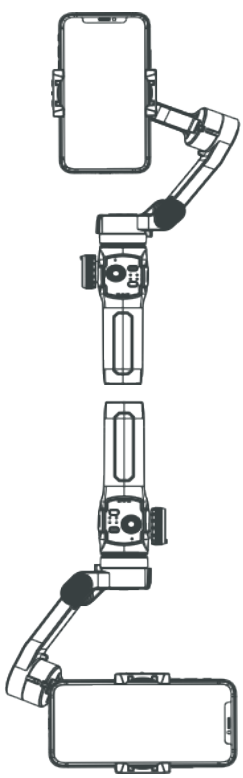

Work mode-portrait

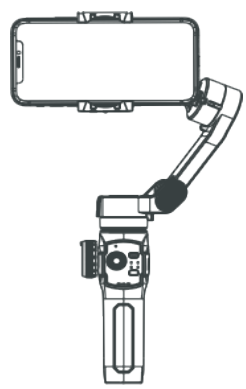

Work mode-landscap

Underslung mode

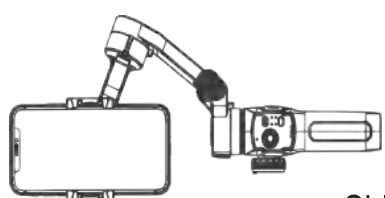

Side grip mode

Charging

This product supports fast charging, suggest to use 5V/2A Type C Adapter to the Gimbal

Support operation during charging.

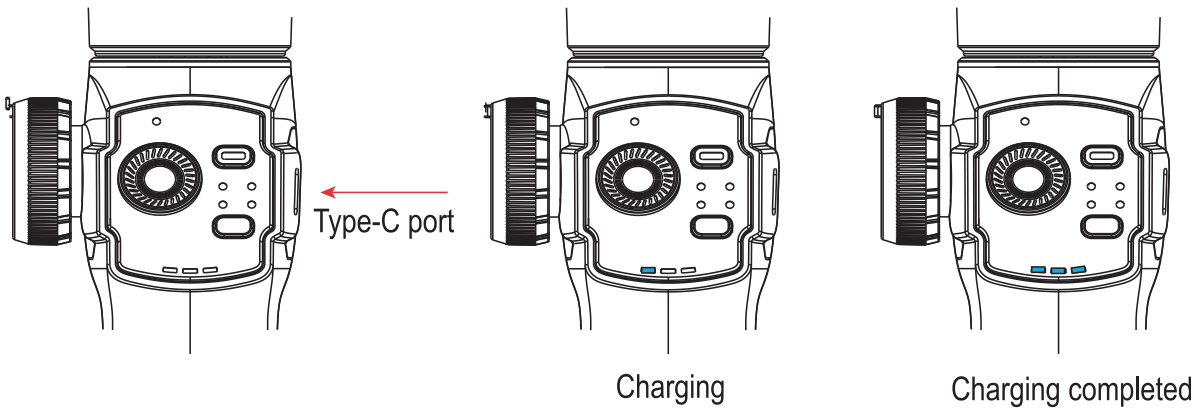

Power OFF

Press the Power Button for One(1) second until the Indicator Lights OFF

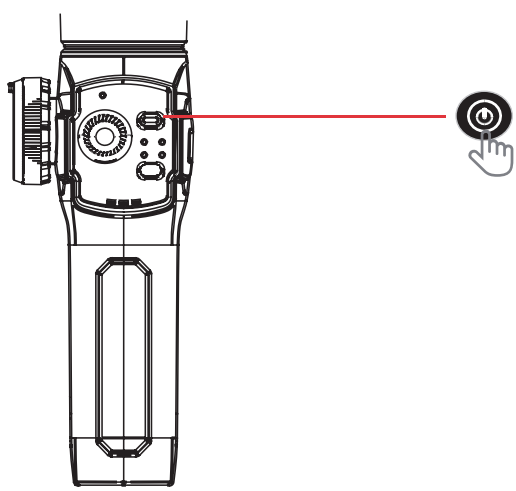

AI Tracking Module Instructions(Optional)

(Smartphone holder diagram)

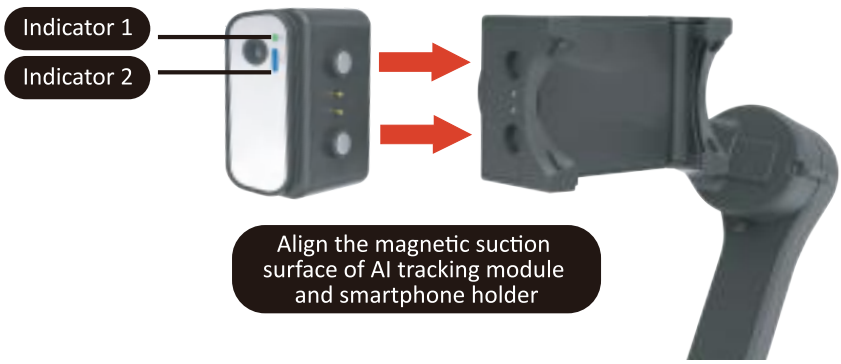

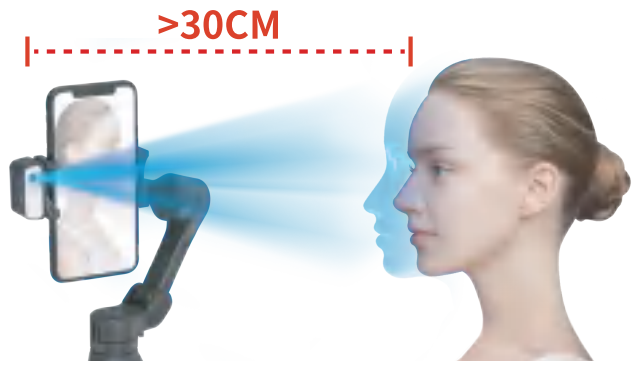

1. AI tracking distance>30cm
2. If there is sufficient light on the face, the AI tracking module will realize better tracking effect

Indicator 1:

Off: gesture recognition function is off
On: gesture recognition function is on
Flash 3 times: gesture recognition function is activated and recognizing gestures
Flashing: gimbal is connecting with AI tracking module

Gesture:

✌ Turn on the face tracking
✋ Turn off the face tracking
🤟 Turn on/off the fill light
👌 Adjust the fill light mode and brightness

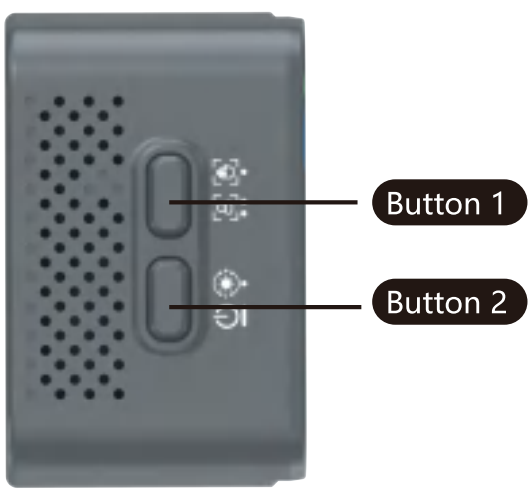

Indicator 2:

Off: face tracking function is off
Slow flashing: face tracking function is on and no facial recognition
On: face tracking function is on and recognized face
Default status upon power on: gesture recognition function and face tracking function are both activated

Button 1:
Single press: turn on/off the gesture recognition function
Double press: turn on/off the face tracking function

Button 2:
Press and hold: turn on/off the LED light
Single press: switch the light mode and brightness (9 levels)

Light mode:
Mixed light: soft, mid, strong
Warm light: soft, mid, strong
White light: soft, mid, strong

L9(lite) black Stabilizer Basics Tutorial

1. It is recommended to remove the phone case

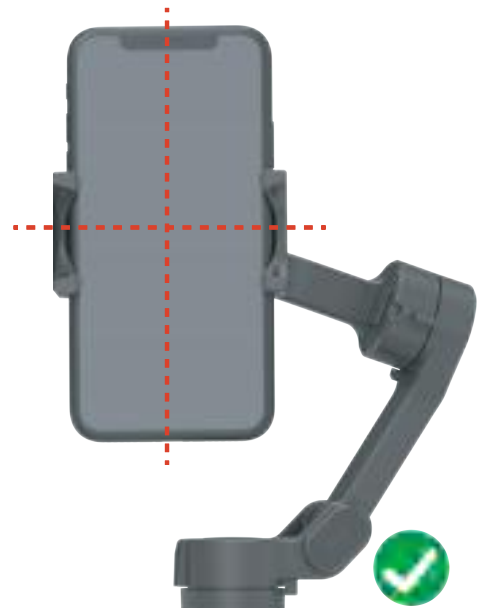

2. Please follow the prompts to install your phone in the center

According to step 1, install the phone correctly, the stability will be improved, and the battery life will be increased.

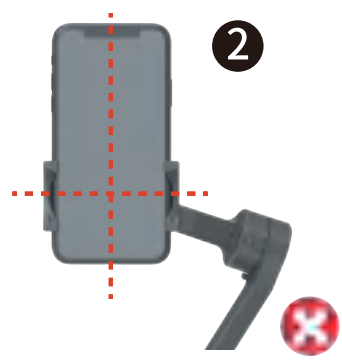

According to 2 / 3, the phone is not stable enough and the battery life will be shortened.

Specifications

Pitch Angle	160^0
Roll Angle	325^0
PAN Angle	340^0
Controllable Tilt Angle	$+45^0/-45^0$
Controllable Roll Angle	$+100^0/-220^0$
Controllable PAN Angle	$+250^0/-100^0$
Net Weight	382 gms
Dimension	Unfold : 278*136*76mm Folded : 164*110*54mm
Support Smartphones	Diagonal : <192mm or <7.72 inch Wide :55-90mm Thickness : 7-12mm
Input Voltage	5V
Input Currency	2A
Working Temperature	0^0C-40^0C

Caution

1. Ensure the Motor Rotation is not blocked by external force during and after the stabilizer is Powered ON.
2. Please do not contact with Sea Water or Corrosive Liquid.
3. Please do not disassemble the stabilizer (except for the detachable accessories in the manual).
4. If the Motor works continuously for a Long Time, the surface Temperature of the Motor may be too high.
5. It is strictly forbidden to Drop or Collide with the Stabilizer, which may damage it and cause abnormal operation;

Storage and Maintenance

1. Please keep this product away from children and pets;
2. It is forbidden to put the product near the Heat source (Furnace or Heater, etc.) and in the Car at Hot Weather;
3. Please store the product in a Dry Environment;
4. Do not Overcharge or Discharge the battery, otherwise the battery cell will be damaged;
5. Do not use the product in the environment with Too High or Too Low Temperature;

For any query please contact :

IMS Mercantiles Limited

(Formerly Known As IMS Mercantiles Pvt. Ltd.)

#704, Ring Road Mall, Outer Ring Road, Near Deepali Chowk,
Sector-3, Rohini, Delhi - 110085 Tel. : 1800-123-544-444
Email : support@digitek.net.in Website :www.digitek.net.in

FCC WARNING

This device complies with part 15 of the FCC Rules. Operation is subject to the following two conditions: (1) This device may not cause harmful interference, and (2) this device must accept any interference received, including interference that may cause undesired operation.

Note: This equipment has been tested and found to comply with the limits for a Class B digital device, pursuant to part 15 of the FCC Rules. These limits are designed to provide reasonable protection against harmful interference in a residential installation. This equipment generates, uses and can radiate radio frequency energy and, if not installed and used in accordance with the instructions, may cause harmful interference to radio communications. However, there is no guarantee that interference will not occur in a particular installation. If this equipment does cause harmful interference to radio or television reception, which can be determined by turning the equipment off and on, the user is encouraged to try to correct the interference by one or more of the following measures:
—Reorient or relocate the receiving antenna.
—Increase the separation between the equipment and receiver.
—Connect the equipment into an outlet on a circuit different from that to which the receiver is connected.
—Consult the dealer or an experienced radio/TV technician for help.

Note: The Grantee is not responsible for any changes or modifications not expressly approved by the party responsible for compliance. such modifications could void the user's authority to operate the equipment.

The device has been evaluated to meet general RF exposure requirement.
This equipment complies with FCC's RF radiation exposure limits set forth for an uncontrolled environment. This device and its antenna(s) must not be co-located or conjunction with any other antenna or transmitter.
The device can be used in portable exposure conditions without restriction.