▪ Shenzhen Baoan District Qianjin 2 Road BaoYunda logistics information building 12A10
tel: 0755-23069700

P/N: HY160808 SRF09

✓ Features:

1. Surface mounted element with a small dimension of 1.6 × 0.8 × 0.8 mm meet future miniaturization trend.
2. Embedded and LTCC (low temperature co-fired ceramic) technology is able to integrate with system design as well as beatifying the housing of final product.
3. Miniaturization, wideband, high stability, low ESR, and low tolerance.
4. Dual-band resonances in the dominant and harmonic modes enables multiband operations.
5. Novel ground-radiation technique enables radiation from both the antenna and the ground plane.

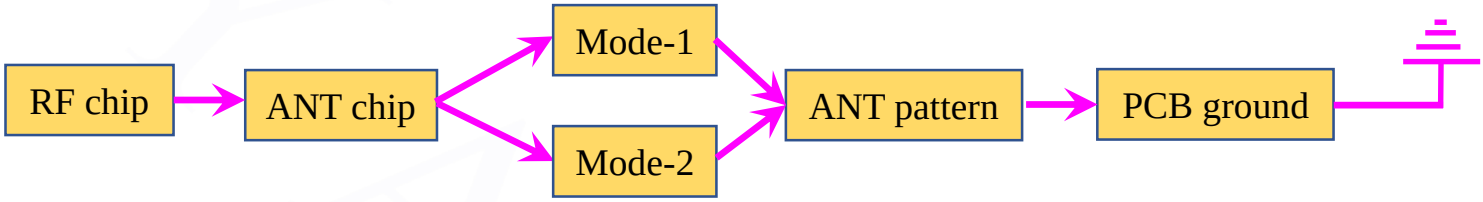

✓ Applications:

Antenna type: SMD ANT

1. Bluetooth
2. Dual-band WLAN
3. ISM and UWB

✓ Dimensions (Unit: mm)

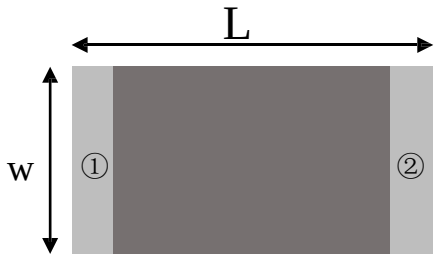

(Top View)

Number	Terminal Name
①	INPUT
②	NC

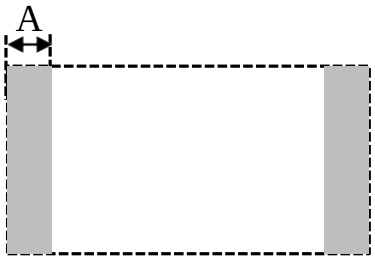

(Bottom View)

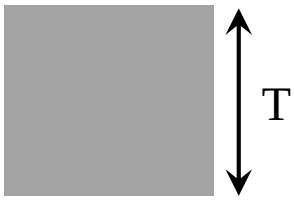

(Side View)

Symbols	L	W	T	A
Dimensions	1.60±0.20	0.80±0.20	0.80±0.20	0.30±0.10

Shenzhen Hanyang Antenna Design Co. Ltd. has possession of proprietary information provided in this report and this proprietary information shall be kept in strict confidence and not disclosed to any person or firm without the prior written consent of Shenzhen Hanyang Antenna Design Co. Ltd.

▪ Shenzhen Baoan District Qianjin 2 Road BaoYunda logistics information building 12A10
tel: 0755-23069700

✓ Layout-1 (3.5mm×6.5mm)

Top layer:

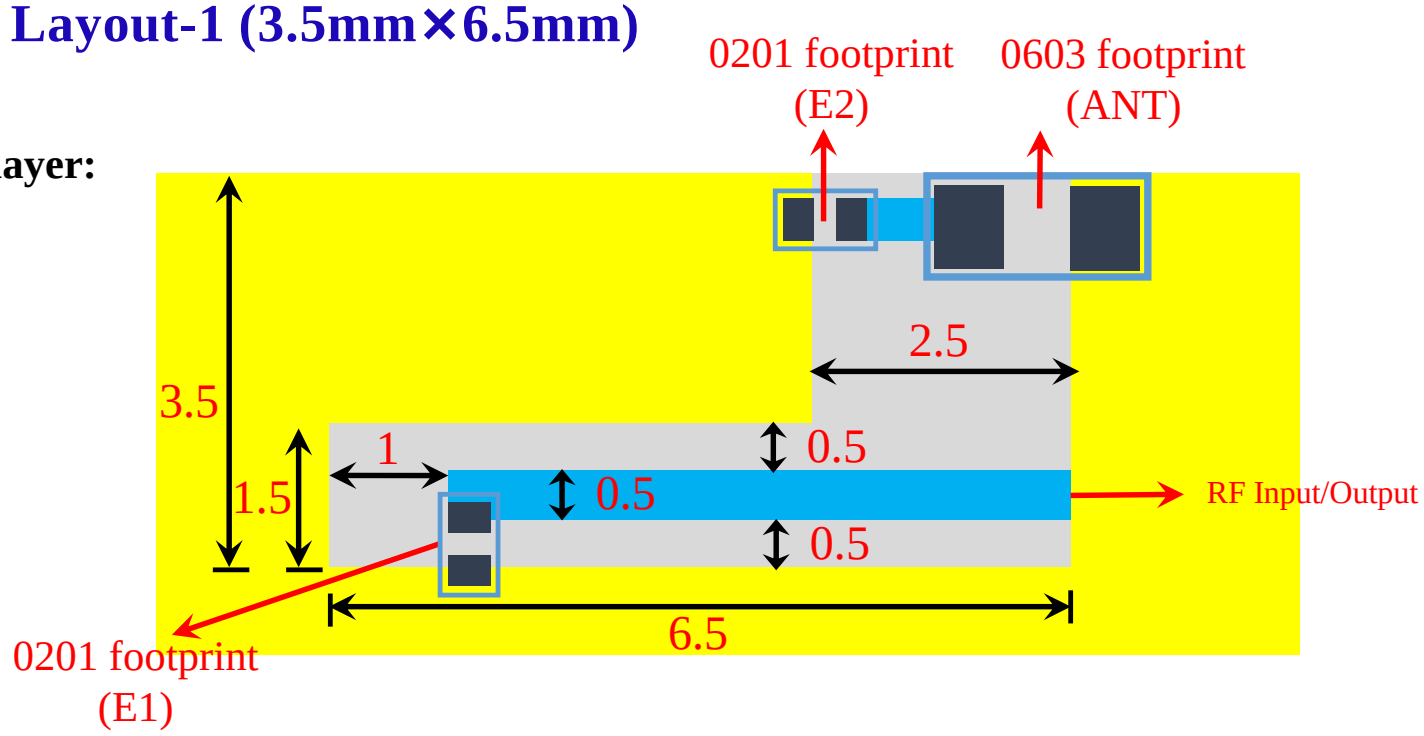

Bottom layer:

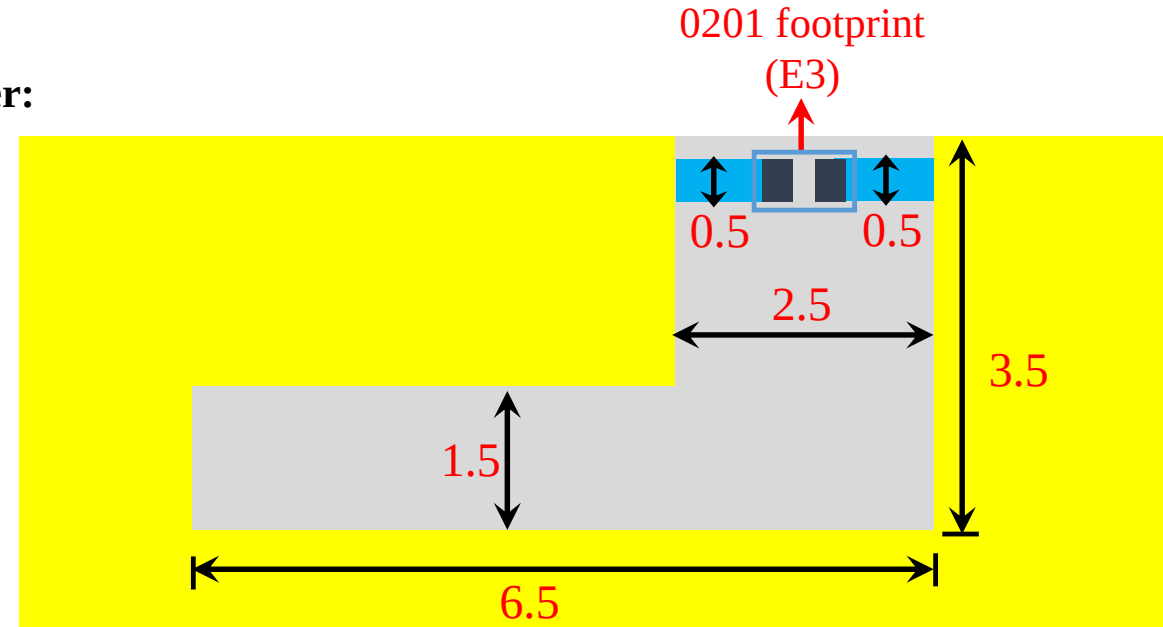

Equivalent circuit:

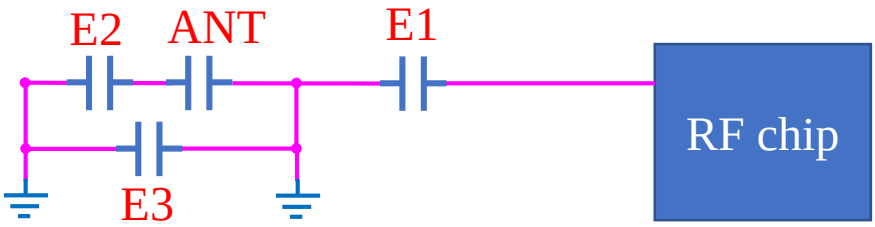

Shenzhen Hanyang Antenna Design Co. Ltd. has possession of proprietary information provided in this report and this proprietary information shall be kept in strict confidence and not disclosed to any person or firm without the prior written consent of Shenzhen Hanyang Antenna Design Co. Ltd.

▪ Shenzhen Baoan District Qianjin 2 Road BaoYunda logistics information building 12A10
tel: 0755-23069700

P/N: HY160808 SRF09

✓ Layout-2 (1.5mm×10mm)

Top layer:

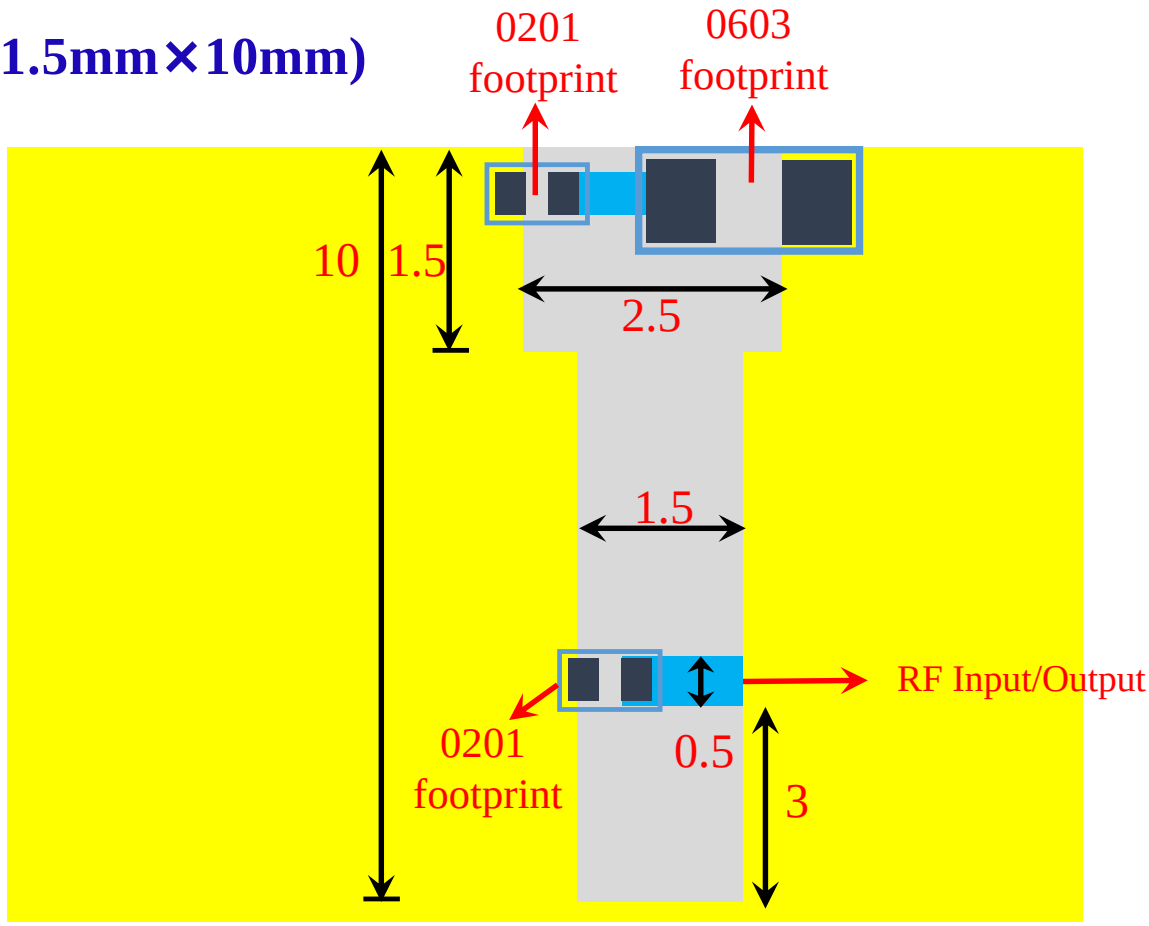

Bottom layer:

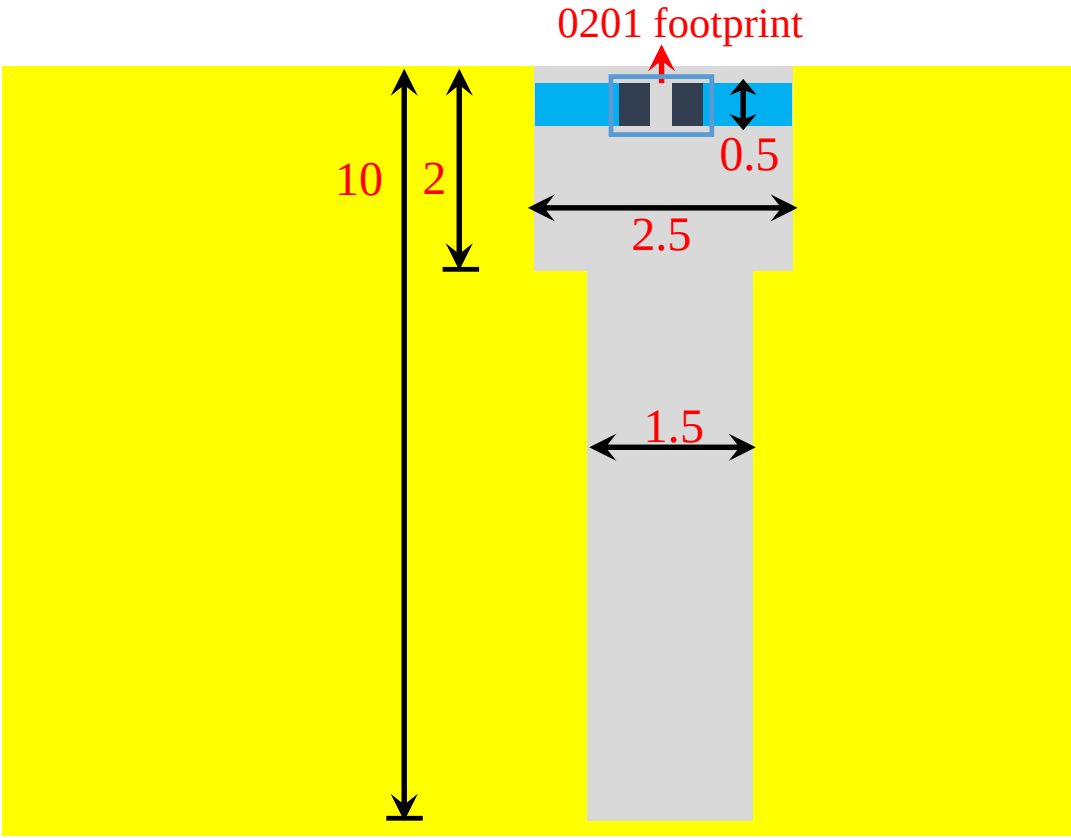

Shenzhen Hanyang Antenna Design Co. Ltd. has possession of proprietary information provided in this report and this proprietary information shall be kept in strict confidence and not disclosed to any person or firm without the prior written consent of Shenzhen Hanyang Antenna Design Co. Ltd.

▪ Shenzhen Baoan District Qianjin 2 Road BaoYunda logistics information building 12A10
tel: 0755-23069700

✓ Electrical Characteristics:

	Feature	Specification
1	Central frequency	2.45GHz
2	Bandwidth	>150MHz
3	Peak gain	2.78 dBi
4	VSWR	<2
5	Polarization	Linear
6	Azimuth beamwidth	Omnidirectional
7	Impedance	50 Ω

✓ Characteristic Curves:

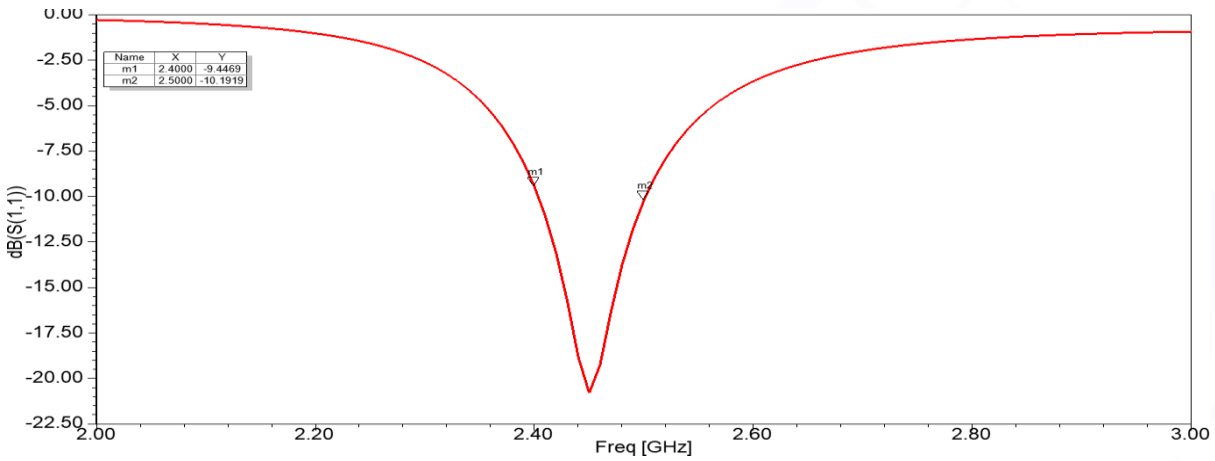

Shenzhen Hanyang Antenna Design Co. Ltd. has possession of proprietary information provided in this report and this proprietary information shall be kept in strict confidence and not disclosed to any person or firm without the prior written consent of Shenzhen Hanyang Antenna Design Co. Ltd.

▪ 深圳市宝安区前进二路宝运达物流信息大厦12A10/12A11
▪ 青岛市崂山区松岭路399号海信产业园A1号楼606
电话：0755-23069700 传真：0755-23069700

P/N: HY160808 SRF07, HY160808 SRF08, HY160808 SRF09

✓ Radiation Pattern:

coordinates：

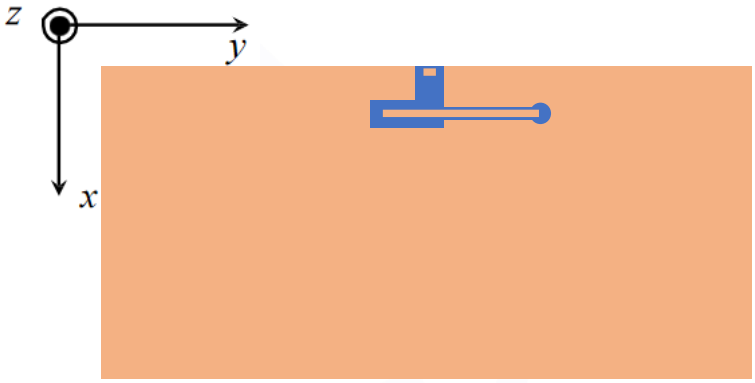

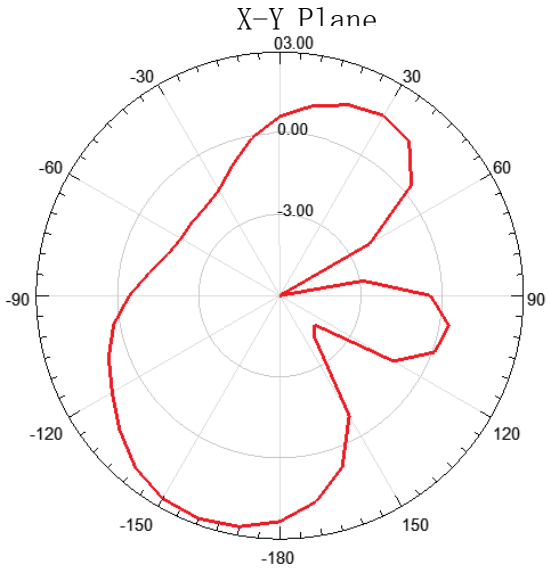

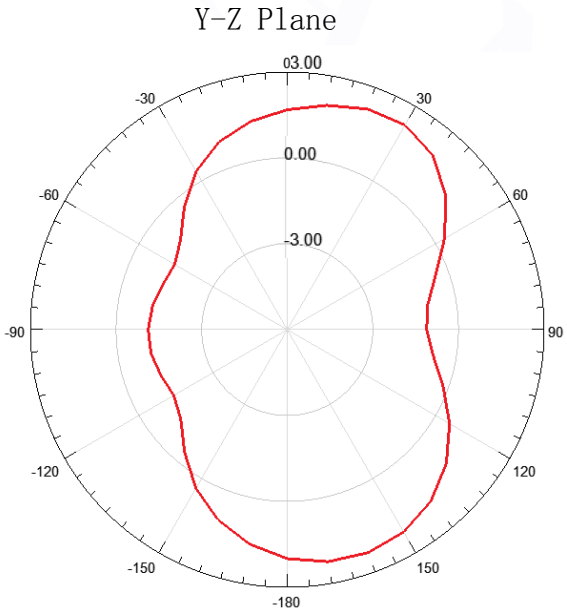

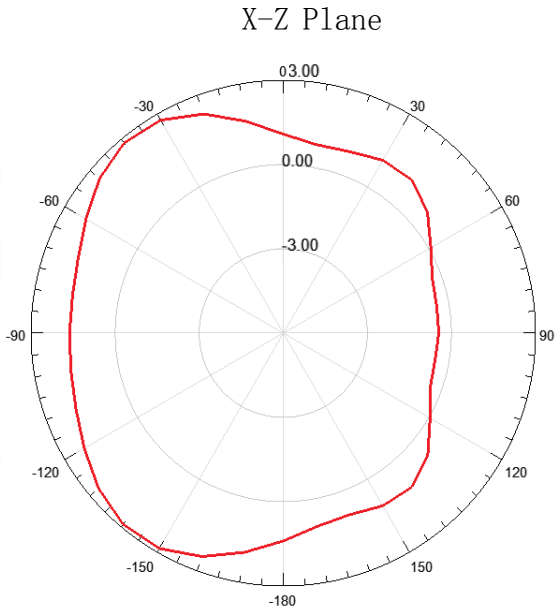

✓ Radiation Performance:

Frequency	2400MHz	2450MHz	2500MHz
Avg. gain	-1.92	-1.35	-1.56
Peak gain	1.79	2.78	2.66
Efficiency	74.55	80.25	76.98

Hanyang Antenna Design Co. Ltd. has possession of proprietary information provided in this report and this proprietary information shall be kept in strict confidence and not disclosed to any person or firm without the prior written consent of Hanyang Antenna Design Co. Ltd.

▪ Shenzhen Baoan District Qianjin 2 Road BaoYunda logistics information building 12A10
tel: 0755-23069700

✓ Dependability Test

Test Temperature	25℃±5℃
Operating Temperature	-25℃~+125℃
Temperature	5~40℃
Relative Humidity	20~70%

✓ Moisture Proof

Temperature: 40±2℃ Humidity: 90~95%RH
Duration: 500h
Recovery conditions: Room temperature Recovery Time: 24h (Class1) or 48h (Class2)

✓ Solderability

At least 95% of the terminal electrode is covered by new solder.
Preheating conditions:80 to 120℃; 10~30s.
Solder Temperature:235±5℃ Duration:2 ±0.5s, Solder Temperature:245±5℃ Duration:2±0.5s

✓ Optimum Solder Amount for Reflow Soldering

Too much solder

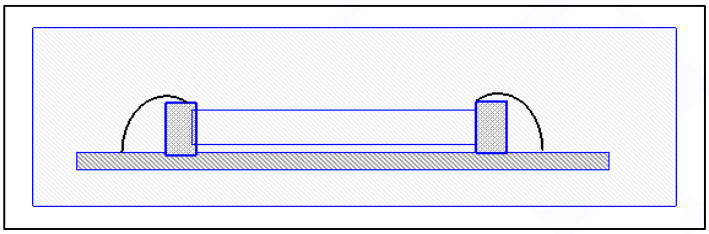

Cracks tend to occur due to large stress.

Not enough solder

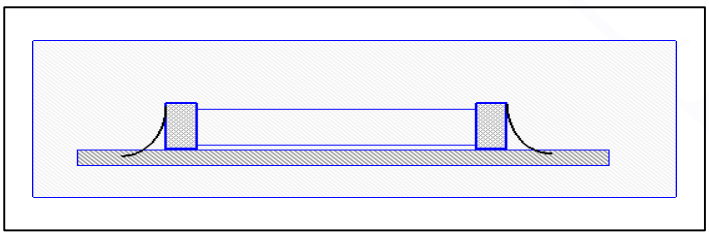

Weak holding force may cause bad connection between the chip and PCB.

✓ Recommended Soldering Amounts

The optimal solder fillet amounts for re-flow soldering

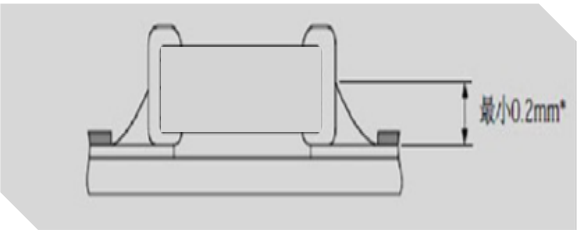

The optimal solder fillet amounts for wave soldering

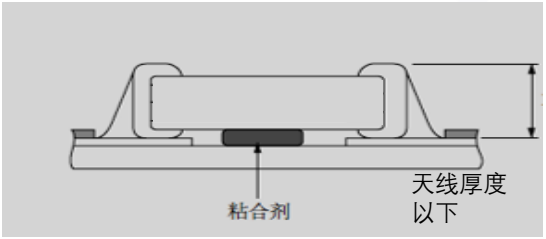

Shenzhen Hanyang Antenna Design Co. Ltd. has possession of proprietary information provided in this report and this proprietary information shall be kept in strict confidence and not disclosed to any person or firm without the prior written consent of Shenzhen Hanyang Antenna Design Co. Ltd.

▪ Shenzhen Baoan District Qianjin 2 Road BaoYunda logistics information building 12A10
tel: 0755-23069700

✓ Temperature Cycle Test

10±1S Applied Force: 5N Duration: 10±1S
Preheating conditions: up-category temperature, 1h
Recovery time: 24±1h
Initial Measurement
Cycling Times: 5 times, 1 cycle, 4 steps:

Stage	Temperature(℃)	Time (minutes)
Step 1	Lower temperature limit (NPO/X7R/X7S/X6S/X5R:-55 Y5V:-25 Z5U:+10)	30
Step 2	normal atmospheric temperature(+20)	2-3
Step 3	Upper line temperature (NPO/X7R/X7S: +125 Y5V/Z5U/X5R:+85 X6S:+105)	30
Step 4	normal atmospheric temperature(+20)	2-3

✓ Resistance to Soldering Heat

Preheating 80 to 120℃; 10~30s.Solder Temperature: 235±5℃; Duration:2±0.5s; Solder Temperature: 245±5℃ Duration: 2±0.5s; Preheating100 to 200℃; 10±2min.
Solder Temperature: 265±5℃; Duration: 10±1s
Clean the capacitor with solvent and examine it with a 10X(min.) microscope.
Recovery Time: 24±2h
Recovery condition: Room temperature

✓ Resistance to Flexure of Substrate

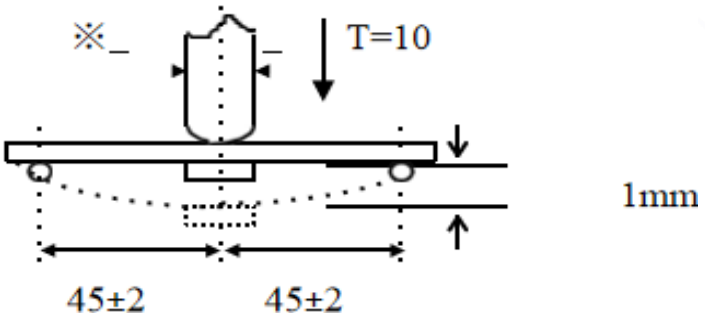

Test Board: Al_2O_3 or PCB Warp: 1mm Speed: 0.5mm/sec.
Unit: mm

The measurement should be made with the board in the bending position.

Shenzhen Hanyang Antenna Design Co. Ltd. has possession of proprietary information provided in this report and this proprietary information shall be kept in strict confidence and not disclosed to any person or firm without the prior written consent of Shenzhen Hanyang Antenna Design Co. Ltd.

▪ Shenzhen Baoan District Qianjin 2 Road BaoYunda logistics information building 12A10
tel: 0755-23069700

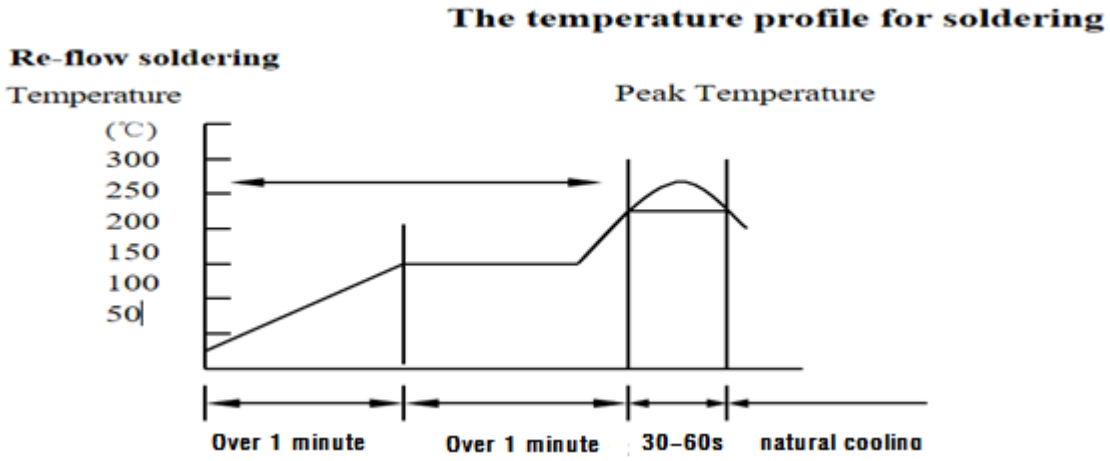

	Pb-Sn soldering	Lead-free soldering
Peak temperature	230℃～250℃	240℃ ~ 260℃

While in preheating,please keep the temperature difference between soldering temperature and surface temperature of chips as: T≤150℃.

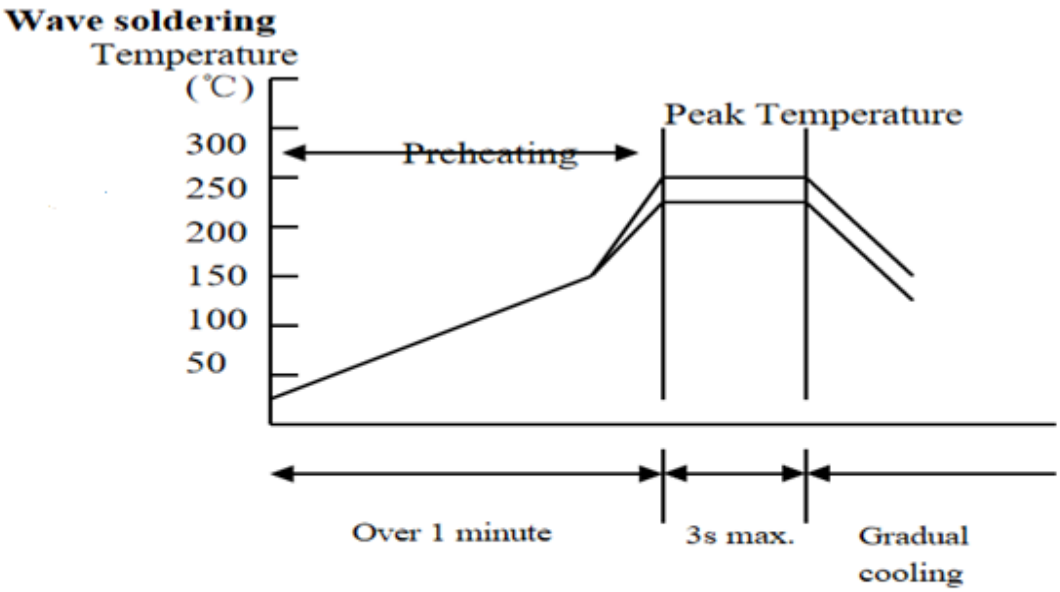

	Pb-Sn soldering	Lead-free soldering
Peak temperature	230℃～260℃	240℃～270℃

Shenzhen Hanyang Antenna Design Co. Ltd. has possession of proprietary information provided in this report and this proprietary information shall be kept in strict confidence and not disclosed to any person or firm without the prior written consent of Shenzhen Hanyang Antenna Design Co. Ltd.

▪ Shenzhen Baoan District Qianjin 2 Road BaoYunda logistics information building 12A10
tel: 0755-23069700

✓ Dimensions of paper taping

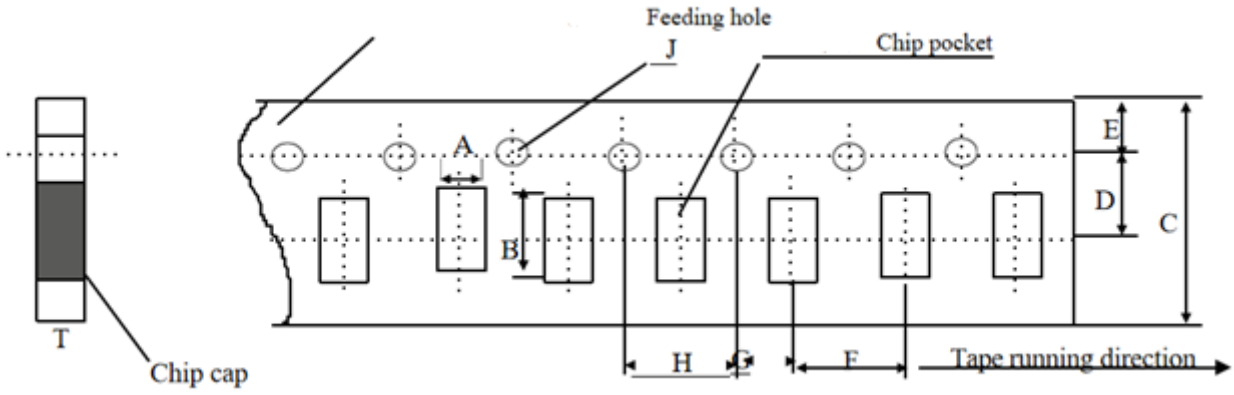

Unit: mm

Code / papersize	A	B	C	D*	E	F	G*	H	J	T
Size	1.10 ±0.10	1.90 ±0.10	8.00 ±0.10	3.50 ±0.05	1.75 ±0.10	4.00 ±0.10	2.00 ±0.10	4.00 ±0.10	1.50 -0/+0.10	1.10 Max

Reel（4000 pcs/Reel）

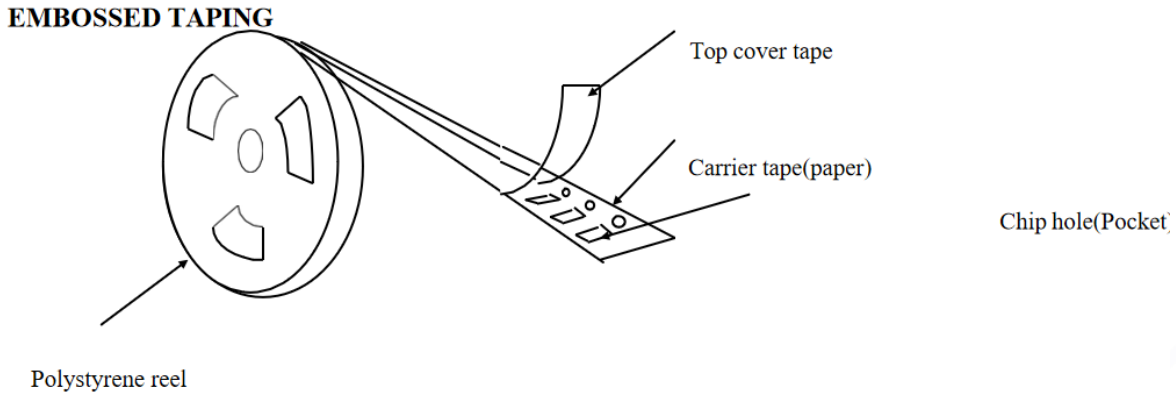

✓ Storage Period

The guaranteed period for solderability is 6 months (Under deliver package condition).
Temperature:5~40℃ /Relative Humidity:20~70%

Shenzhen Hanyang Antenna Design Co. Ltd. has possession of proprietary information provided in this report and this proprietary information shall be kept in strict confidence and not disclosed to any person or firm without the prior written consent of Shenzhen Hanyang Antenna Design Co. Ltd.