QODOSEN
DX-286

High-Performance Digital Receiver

FCC ID:2BTCP-DX-286

User Guide

TABLE OF CONTENTS

INTRODUCTION 3
UNPACKING 3
CAUTION 3
EXTERIOR CONDITION 4
DISPLAY INDICATION 5
FUNCTIONALITY PREVIEW 5
POWER ON/OFF/SLEEP TIMER 6
1. Quickly power on/off the Radio 6
2. Setting the Sleep Timer 6
VIEW SLEEP TIME 7
BAND SWITCHING 7
FREQUENCY CHANGE MODE"FREQ"/MEMORY- PRESELECTED STATION MODES"MEMO" 7
TUNING/SEARCHING FOR RADIO STATIONS 7
1. Manual Tuning 7
2. Automatic Radio Station Search 8
Auto Search Mode Setting: STOP/DELAY mode 8
Automatic Station Search In STOP/DELAY Mode 8
3. AUTO TUNING STORAGE (ATS) 8
ATS_JUMP / ATS COVER 8
ATS Function Operation 9
4. Knob Change Frequency 9
Switching frequency acceleration/normal mode: SPEED ON/SPEED OFF 9
Step switching: FAST/SLOW/STOP/AUTO 9
5. Direct Input Of Radio Frequency (Only In "FREQ" Mode) 10
SW METER BAND/FAST TUNING FREQUENCY 11
Meter Band Switching 11
Auto Search Station (ATS) in Meter Band 11
Fast Tuning Frequency (Valid For FM/LW/MW Bands) 11
ATS/SEEK SEARCH THRESHOLD SETTING 12
FM R(B)DS FUNCTION 12
R(B)DS Switch Setting 12
R(B)DS Information View 12
FM SIGNAL PROCESSING 13
STORING RADIO FREQUENCY OPERATIONS 13
Page Selection 14
1.Use The < M/TONE T.Z/ > Button To Quickly Store Stations 14
2.Use The Numeric Keys To Quickly Store Stations 14
3.Specified Address Storage 14
4.Use DELAY Mode Auto Search To Store Stations 16
BROWSE SAVED STATIONS: < > BROWSE/(0~9)NUMERIC KEY BROWSE 16

AUTOMATIC BROWSING OF SAVED STATIONS 16
DELETING STORED RADIO STATIONS 16
1.Delete The Specified Page (PAGE0~99) 16
2.Delete The Specified Address Radio Station (P000~P999) 17
3.Browse and Delete Radio Stations 17
4.Delete All Pages Of Stored Radio 17
EDIT PAGE NAME 17
MUTE FUNCTION 18
BACKLIGHT FUNCTION 18
LCD SHOWS OFF/ON 18
TONE SWITCHING 19
FM BAND STEREO/MONO 19
BANDWIDTH SWITCHING 19
SQUELCH SETTING 20
BUTTON BEEP SWITCH 20
LW/MW ANTENNA SWITCHING 20
EXTERNAL ANTENNA SOCKET 20
ANTENNA AMP SWITCH 20
ANTENNA ATTENUATOR 21
DISPLAY INFORMATION SWITCHING 21
VOLUME CONTROL 21
HEADPHONES/EARBUDS LISTENING 21
RADIO SETTINGS 21
SETTING WORLD TIME 22
SETTING THE CLOCK 23
ALARM CLOCK WORKING MODE SELECTION 24
Setting The Alarm Time 24
Alarm Working Mode Setting: "SPEAK"/"BUZZER"/"ALARMOFF" 25
Alarm Radio Mode Frequency Setting 25
Turn Off The Alarm When It Rings 25
Snooze Function 25
LOCK BUTTON 25
RESET RADIO 26
RESTORE FACTORY SETTINGS 26
INSTALLATION OF BATTERIES 26
BATTERY LEVEL INDICATION 26
SMART CHARGING 27
FREQUENTLY ASKED QUESTONS(FAQS) 27
PRECAUTIONS FOR USING BATTERIES 29
ROUTINE MAINTENANCE 30
MAIN PERFORMANCE INDICATORS 30

INTRODUCTION

Welcome to the world of the **QODOSEN DX-286** radio receiver. With its superior performance and rich features, this radio offers enthusiasts an exceptional long-distance reception experience.

The **DX-286** adopts the high-performance automotive chip **TEF6686** from **NXP**, ensuring excellent selectivity and sensitivity. It supports **FM, LW, MW,** and **SW** bands, allowing you to thoroughly enjoy broadcasts from every band. In terms of antenna, the **DX-286** supports external antennas for all bands. The amplitude modulation bands **(LW/MW/SW)** come with a built-in low noise amplifier switch, enhancing the reception sensitivity. The built-in adjustable antenna attenuator improves overload resistance. The overall **S/N Radio ≥ 60db**, brings an unprecedentedly superior sound quality experience. The **FM** band supports 64-108MHz, with 17 different bandwidths for outstanding selectivity. It supports **R(B)DS** decoding, providing you with more information and entertainment. The **LW** and **MW** bands support the switching of telescopic antenna and Internal ferrite bar antenna, offering different reception experiences. Medium wave supports 9KHz and 10KHz stepping. The SW band cover international shortwave bands,allowing to receive radio programs from the world. The **DX-286** offers various tuning methods and can set different search thresholds. Its compact, portable body supports power supply by **18650** batteries and can be charged and powered by an external power source. Equipped with a full-range speaker, the tone-switching function brings superb tonal performance. Whether at home or on the go, the **DX-286** is your perfect companion. Its portability, playability, selectivity, and sensitivity will revolutionize your understanding of traditional radios, opening the door to a wonderful world of information and entertainment and taking your listening experience beyond imagination!

UNPACKING

The box should contain the DX-286 radio, USB Charging Cable, Carry Case, and this User Guide. If anything is missing or damaged, please get in touch with your dealer immediately. We recommend you keep the packaging in the unlikely event your radio will need servicing.

CAUTION

- Before turning the unit on, set your volume control to a low setting.
- Slowly increase the sound until you can hear it comfortably and clearly without distortion.
- Long-term exposure to loud sounds may cause hearing damage. It is best to avoid High-volume levels when using headphones/earbuds, especially for extended periods.

EXTERIOR CONDITION

FRONT SIDE

RIGHT SIDE

BACK SIDE

LEFT SIDE

BOTTOM

DISPLAY INDICATION

ALARM

SQUELCH

World Time

dBμ:Signal Strength Measuring Unit
dB:Signal-to-noise Ratio Measuring Unit

Sleep Timer

Battery Power

Display Clock Time/Alarm Time/Signal Stength/ S/N Ratio/World Time/Memory Location

Frequency Band
FM:Frequency Modulation
SW:Short Wave
MW:Medium Wave
LW:Long Wave

Display Time/Frequency etc.

MHz:Unit Display for FM
KHz:Unit Display for SW/MW/LW

R(B)DS

FM Stereo reception

Display STEP/PAGE/R(B)DS/ SET/SW Meter Band etc.

Button Lock

FUNCTIONALITY PREVIEW

[M/TONE/T.Z/AL]:World Time Zone Selection/Alarm Mode Setting/Store Radio Station/Tone Setting

[BW/ST/ALARM]:Bandwidth Selection/Alarm Timer Setting/Alarm Radio Setting/FM Stereo/Mono Setting

[POWER/SLEEP]:Power on/ Sleep Timer/Turn off the alarm

[DEL/LIGHT]:Station Delete/Backlight setting/Backlight on or off

[LOCK/DISPLAY]:Button Lock/ Snooze/Information Display

[EDIT/MUTE]:Rename Page Editor/Mute Switch

[SET/METER+]:Radio Setting/
Meter Band Switching/
Frequency Fast Tuning/
FM Signal Processing/
AM Antenna
AMP Switching

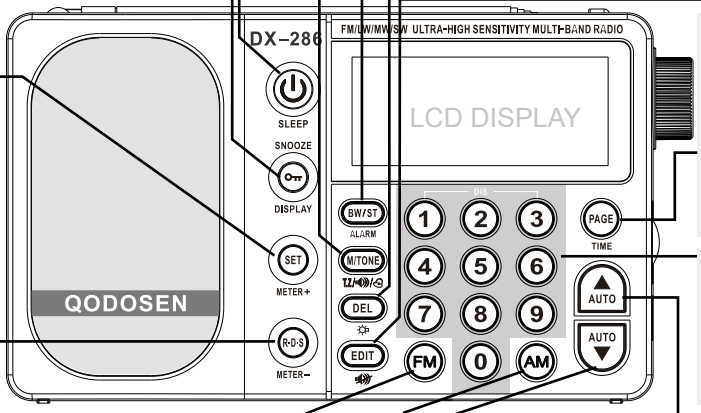

[PAGE/TIME]:Memory Frequency switching/ Operation confirmation/ Clock setting/Auto search tuning threshold setting

[#0~#9]:Numeric Keys/-Frequency Input Keys/ Station Save Keys/Station preselection keys

[RDS/METER-]:R(B)DS information switching/ Meter Band switching/in-meter band ATS/ Frequency fast tuning/Button BEEP sound switching/R(B)DS switching/AM antenna switching

[FM]:FM Band Switching/FM Band ATS/Confirmationof FM Frequency Input

[UP]:Frequency Up/Page Up/Memory Mode Setting/Auto Search station/Stored staton browsing

[AM]:LW MW SW band switching/LW MW SW band ATS/Confirmation of LW MW SW frequency input

[DOWN]:Frequency down/Page down/Auto search mode setting/Auto search station/ Stored station browsing

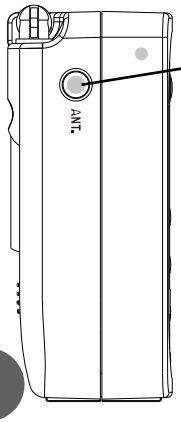

External Antenna Interface

[KNOB]:Multi-function Knob/Step Setting/ Squelch Setting/Fast Adjustment Setting

Headphone socket

Volume Contral

System reset

Power supply/Charging

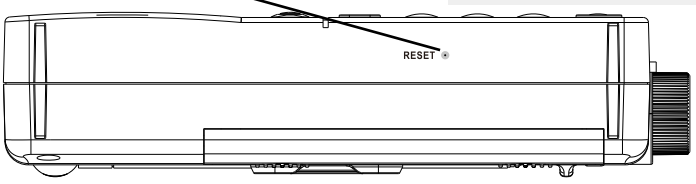

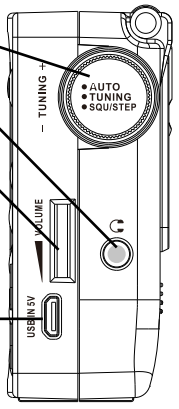

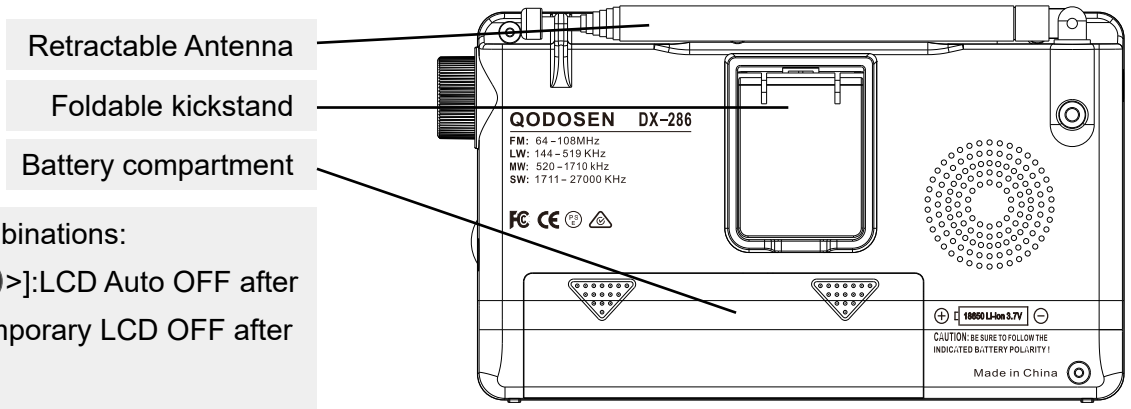

• Button Conbinations:
[<1>+<3>]:LCD Auto OFF after power on/temporary LCD OFF after power on.
[<PAGE TIME>+<5>]:Antenna attenuation setting.

LISTENING TO RADIO

POWER ON/OFF/SLEEP TIMER

1. Quickly Power On/Off The Radio

Quick Press the < SLEEP > button to power the radio on/off.

2.Setting the Sleep Timer

This unit's sleep time can be flexibly adjusted. Sleep timer shutdown up to 99 minutes, the shortest 1 minute, 1 ~ 99 minutes of free choice; there are 2 ways to choose the sleep shutdown time: one is a Quick Press on the numeric keys 0 ~ 9 to input directly, the other one is to rotate the < > knob.

Sleep Time Display Format:

"**SLEEP-XX(1~99)**": The radio will automatically turn off after XX minutes.

"**ON**": The sleep timer is disabled,the radio won't turn off automatically.

Example: To make the radio power off automatically after 60 minutes of powering on the radio

Method 1: Use the numeric keys to enter the sleep time.

(1). Power off the radio, Quick Press the number < 6 > < 0 > buttons, and the LCD will show "**60**",Quick Press the < SLEEP > button again. You can see "**SLEEP-60**" displayed on the bottom of **LCD** and the sleep symbol " " flashing; you can also rotate the < > knob to adjust the sleep time.

(2). Power on the radio and switch to **"FREQ"** mode; you can also input (1~99) numbers and Quick Press the < SLEEP > button to set the sleep time.

Method 2:Use < SLEEP > To Select Sleep Time.

Power off the radio, Press and Hold the < SLEEP > button for 2 seconds until **"SLEEP-XX"** appears on the LCD and the sleep symbol " " flashes, rotate the < > knob to adjust to **"SLEEP-60"**, Quick Press the < PAGE TIME > button to exit, or wait for 5 seconds to confirm the sleep time automatically.

VIEW SLEEP TIME

Power on the radio, Press and Hold the < SLEEP > button for 2 seconds to display the remaining time for sleep shutdown.LCD show "ON", the radio will not turn off automatically.

BAND SWITCHING

1. Switching to FM band: Power on the radio, and Quick Press the < FM > button to switch to FM band.
2. Switching to LW/MW/SW band: Power on the radio, Cyclically Quick Press the < AM > button to switch to the corresponding LW/MW/SW band. (**Tip:** To listen to the **LW** band, you need to set "**LW ON**" for details see page 21-22).

FREQUENCY CHANGE MODE"FREQ"/MEMORY- PRESELECTED STATION MODES"MEMO"

The unit has 2 modes:Frequency Tuning Mode "FREQ" Memory/Preselected Station Mode "MEMO"

"**MEMO**" mode: Power on the radio, and Quick Press the < PAGE TIME > button, "**PAGE-XX**" will be displayed on the bottom of LCD, then it will enter the memory, Preselected radio station mode, referred to as "**MEMO**" mode; in "**MEMO**" mode, knob < > to select the radio station address, < AUTO > or < AUTO > button to select the page.

"**FREQ**" mode: Quick Press the < PAGE TIME > button again, the **LCD** does not show "**PAGE-XX**" or other displays, it enters the frequency tuning mode, referred to as "**FREQ**" mode. In "**FREQ**" mode, knob < > and < AUTO > or < AUTO > button as a frequency adjustment/auto search function.

TUNING/SEARCHING FOR RADIO STATIONS

The unit has 5 tuning modes.

1. Manual Tuning

Power on the radio and switch to "**FREQ**" mode, Quick Press the < AUTO > or < AUTO > button, or rotate the < > knob to change the tuning frequency and search for a satisfactory station.

2. Automatic Radio Station Search

(1). Auto Search Mode Setting: STOP/DELAY mode

This unit has 2 automatic search mode settings, which can be set according to your reference.

STOP/DELAY Mode Setting Method:

1). Power off the radio, Press and Hold the < AUTO > button for 2 seconds to enter **SEEK** mode setting, Quick Press the < AUTO > button to switch to "**STOP**" or "**DELAY-XX**" mode, the **LCD** will show "**STOP**" or "**DELAY-XX**" (XX=5~90) flashing, the **LCD** will show "**STOP**" or "**DELAY-XX**" (XX=5~90), the **LCD** will show "**STOP**" or "**DELAY-XX**" (XX=5~90).

2). After selecting "**STOP**" display, Quick Press the < PAGE TIME > button directly to confirm **STOP** mode.

3). Select "**DELAY-XX**" display, rotate the < > knob to select 5~90 (unit: second), and press the < PAGE TIME > button to confirm **DELAY** mode.

(2). Automatic Station Search In STOP/DELAY Mode

STOP Mode: Power on the radio and switch to "**FREQ**" mode, and Press and Hold the < AUTO > or < AUTO > button for 2 seconds, the frequency will stop searching when it automatically searches for a valid station.

DELAY mode: Power on the radio and switch to "**FREQ**" mode, and Press and Hold the < AUTO > or < AUTO > button for 2 seconds, after auto searching a valid station, the **LCD** will show "**DELAY-XX**", wait fo XX(XX=5~90) seconds, and then continue to auto search the next station.

3.AUTO TUNING STORAGE (ATS)

There are 2 "**ATS**" methods: **ATS_JUMP / ATS COVER**.

Setting Method:

1). Power off the radio, Press and Hold the < AUTO > button for 2 seconds to switch the display of **ATS_JUMP /ATS COVER :**

ATS_JUMP means that during **ATS**, it will only select the empty address that has not been stored; when it has been entirely stored, it will exit **ATS** automatically.

ATS COVER means that during **ATS**, it will store the stations according to the address from smallest to largest. (P00.P01...Pnn...Pnn+1, see the **Tip** for the starting address of each band); the new station's frequency will overwrite the station stored at the current address.

2). Quick Press the < PAGE TIME > button to confirm the exit.

Tip: When starting **ATS** operation:

The **FM** band stations starting from PAGE 0
The **LW** band stations starting from PAGE 25
The **MW** band stations starting from PAGE 30
The **SW** band stations starting from PAGE 45

ATS Function Operation:

According to the current band, Press and Hold the corresponding band button for 2 seconds to enter the **ATS** function.

1). Power on the radio, Press and Hold for 2 seconds the < FM > or < AM > button to enter the **ATS**, and release the button; the valid station is searched and stored, and "PXXX" is displayed on the upper right corner of the **LCD** (format: e.g., P256 means the 6th position on page 25).

Tip: The < FM > button corresponds to the **FM** band **ATS**
The < AM > button Corresponds to **LW/MW/SW** band **ATS**

2). During **ATS**, Quick Press any button briefly to stop **ATS**.

4. Knob Change Frequency

1).Switching frequency acceleration/normal mode: SPEED ON/SPEED OFF

Power off the radio, Press and Hold the button on the right knob< > for 2 seconds:

The **LCD** shows "**SPEED ON**", when the acceleration function is enabled. When adjusting the frequency using the < > knob, rapidly rotating the < > knob will result in a faster step change. (see table: **Knob Tuning Frequency Step Explanation**).

The **LCD** shows "**SPEED OFF**", Indicates that the rotary < > knob change frequency acceleration function is off.

2).Step switching: FAST/SLOW/STOP/AUTO

Power on the radio, Quick Press the < > knob button to switch **FAST/SLOW/STOP/AUTO**.

Table 1:Knob Tuning Frequency Step Description

MODE / STEP / BAND	FAST	SLOW	AUTO	STOP	FAST SPEED ON (fast spinning)	SLOW SPEED ON (fast spinning)	ATS
FM (FM Step setting sections, default 100k)	30KHz 50KHz 100KHz 200KHz 250KHz	10KHz	30KHz 50KHz 100KHz 200KHz 250KHz	STOP	1000KHz	100KHz	30KHz 50KHz 100KHz 200KHz 250KHz
LW	3KHz	1KHz	3KHz	STOP	100KHz	3KHz	3KHz
MW	9KHz 10KHz	1KHz	9KHz 10KHz	STOP	100KHz	9KHz 10KHz	9KHz 10KHz
SW	5KHz	1KHz	5KHz	STOP	100KHz	5KHz	5KHz

"AUTO" Mode:

1). Rotate the < > knob Clockwise, the frequency will automatically search upwards.

2). Rotate the < > knob counterclockwise, the frequency will automatically search downwards.

5. Direct Input Of Radio Frequency (Only In "FREQ" Mode)

Power on the radio and switch to "**FREQ**" mode, the frequency can be entered directly by Quick Press the numeric keys (0~9); Quick Press on the corresponding band < FM >/< AM > button to realize cross-band frequency input(**Example 1/Example 2**); If you input the frequency by numbers (0~9) without pressing the corresponding band < FM >/< AM > button to confirm the frequency, it will automatically confirm the frequency to the current band frequency after 2 seconds (**Example 3**); if the frequency input is wrong/incorrect, "**ERROR**" will be displayed.

Methods Of Operation:

1). Quick Press the numeric keys 0~9 to enter the desired frequency in sequence.

2). Quick Press the < FM > or < AM > button to confirm the frequency of the **FM** or **LW/MW/SW** band.

Example 1:

Listen to **FM**: 107.500MHz, Quick Press the < 1 >< 0 >< 7 >< 5 > < FM > buttons in any band.

Example 2:

Listen to **MW**: 1287KHz, Quick Press the < 1 >< 2 >< 8 >< 7 > < AM > buttons in any band.

Example 3:

In the **FM** band, Quick Press the < 1 >< 0 >< 7 >< 5 > buttons in sequence, and after 2 seconds, the unit automatically confirms the frequency of 107.5 MHz in the **FM** band.

Notes:

1. If the input error exceeds the frequency range, **LCD** will show "**ERROR**"; If the input frequency is incomplete, the trailing number will be filled with zeros based on the band confirmation. For example, Quick Press the < 1 > < FM > buttons directly jumps to the **FM** band at 100.000MHz.
2. If you set the **LW** band off, the error will be displayed when you input the **LW** frequency; if you set the **LW** band on, the error will disappear (for detailed settings, refer to **"RADIO SETTINGS"** on page 22).
3. If **"ERROR"** is displayed when the input **FM** frequency range is between **(64-87.49MHz)** or **(95.01-108MHz)**, please make sure that you have selected the correct **FM** frequency range (For detailed settings, see the **FM** section of **"RADIO SETTINGS"** on page 22).

SW METER BAND/FAST TUNING FREQUENCY

Meter-Band Frequency Operation

Meter Band Switching: Power on the radio and Quick Press the < SET METER+ >/ < R·D·S METER- > button to adjust the meter band up or down.

Auto Search Station (ATS) In Meter Band: Power on the radio, Press and Hold the < R·D·S METER- > button for 2 seconds to enter **ATS** in the current meter-band frequency range.

Fast Tuning Frequency (Valid For FM/LW/MW Bands)

1. Power on the radio and switch to the FM band; Quick Press the < SET METER+ > button to step up the frequency by 1MHz; Quick Press the < R·D·S METER- > button to step down the frequency by 1MHz.

Tip: When turn on **RDS** function in FM band, < R·D·S METER- > button is **R(B)DS** message switching, the Fast Tuning Frequency button is invalid.

2. Power on the radio and switch to the LW/MW band; Quick Press the < SET METER+ > button to step up in 100KHz; Quick Press the < R·D·S METER- > button to step down in 100KHz.

ATS/SEEK SEARCH THRESHOLD SETTING

Power on the radio, Press and Hold the < PAGE TIME > button for 2 seconds, the LCD shows "**DEFAULT**": default threshold.

"**SEEK:1": ATS/SEEK** receives more stations, and weaker stations can be received, but it is possible that the received stations are not clear.

"**SEEK:2": ATS/SEEK** receives fewer stations, the quality of the radio station is good,and the listening is clear.

Tip: The number of radio stations searchable at the threshold

SEEK:1> DEFAULT>SEEK:2

FM R(B)DS FUNCTION

R(B)DS Switch Setting

Power on the radio, Press and Hold the < R·D·S METER- > button for 2 seconds, the LCD shows **"R(B)DS ON": Turn on R(B)DS**

"R(B)DS OFF": Turn off R(B)DS

RDS Information View

When receiving **FM** radio,**RDS/RDBS** function is turned on (For **RDS/RBDS** options, see **"RADIO SETTINGS"** on page 22); if the radio station has **R(B)DS**, the **LCD** will show the **R(B)DS** symbol " R·D·S ", Quick Press the < R·D·S METER- > briefly to switch to select different **R(B)DS** information **(PS/PTY/ RT/DATA/PI)**.

Tip :

PS (program service) — Provides 8-character radio station name display; **" NO PS"** is displayed when **PS** is not received.

PTY (program type) — Provides a radio program type display; **"NO PTY"** is displayed when no **PTY** is received.

RT (radio text) — Provides up to 64 characters of radio text display information; **"NO RT"** is displayed when **RT** is not received.

DATA — Provides current time information, including day/month/day/year/hour/minute; **"NO DATA"** is displayed when **DATA** is not received.

PI (program identification) — Provide station identification code; **"NO PI"** is displayed when **PI** is not received.

The display format when a **DATA** message is received is:

"Day of the week Month-Day-Year Hour: Minute"

Weekly display format:

"MON"	Monday
"TUE"	Tuesday
"WED"	Wednesday
"THU"	Thursday
"FRI"	Friday
"SAT"	Saturday
"SUN"	Sunday

For example: Tuesday, October 1, 2023 at 8:30 pm

The LCD's DATA scrolling message is:

" TUE 10- 01-2023 08:30"

Hints: It is recommended to set the bandwidth to **BW AUTO** mode or **BW 72K** or above for receiving **R(B)DS** data.

FM SIGNAL PROCESSING

This unit is equipped with 4 different **FM** signal processing, which may be helpful when receiving weak signals **(FMDX)** set in the default mode **(DEFAULT)**.

Power on the radio and switch to **FM** band, Press and Hold the < SET METER+ > button for 2 seconds to select different mode **"DEFAULT"** / **"FMMI→X"** (X=3).

STORING RADIO FREQUENCY OPERATIONS

This unit adopts a cross-band way to store radio stations; there are 100 storage pages (0~99), each page has 10 radio stations, 1,000 radio frequencies can be stored, according to the reasonable arrangement of the band storage page, the bandwidth and sound mode **(MUSIC/VOICE)** will be stored together when storing stations.

Page Selection: There are 2 ways to select a page .

Power on the radio:

1. Use the numeric keys to enter a page:Power on the radio and switch to **"FREQ"** mode, Quick Press the numeric button to input page directly and then Quick Press the < PAGE TIME > button to confirm; for example, to select "**PAGE-20**", Quick Press to input the < 2 >< 0 >< PAGE TIME > buttons.
2. Use the < AUTO > or < AUTO > button to select a page: Power on the radio and switch to "**MEMO**" mode, Quick Press the < AUTO > or < AUTO > button to cycle through the pages.

Tip: Note the distinction between **"FREQ"/"MEMO"** mode.

Manual Storage Of Radio Frequencies:

There are 4 methods to manually store radio stations.

1.Use The < M/TONE T.Z/◀))/Q > Button To Quickly Store Stations:

Stores radio stations in the order of their addresses, automatically skipping the addresses of already stored radio stations.

Methods Of Operation:

Power on the radio, and Quick Press the < M/TONE T.Z/◀))/Q > button,"**PAGE-XX**" is displayed at the bottom of LCD, "**PXXX**" is displayed at the top right corner, Quick Press the < M/TONE T.Z/◀))/Q > button again to finish storing.

2.Use The Numeric Keys To Quickly Store Stations:

To store the radio station to the 0~9 address corresponding to the current page, you need to Press and Hold the "0~9" numeric key for 2 seconds in "**FREQ**" or "**MEMO**" mode. However, the distinction is that in "**MEMO**" mode, you can also select the corresponding page while storing the station.

Methods Of Operation:

Power on the radio, Press and Hold the "0~9" numeric key for 2 seconds, the upper right corner of **LCD** will show "**PXXX**", the current radio station is stored successfully.

3. Specified Address Storage: You can store the radio station to any specified location.

Methods Of Operation:

1). Power on the radio, and Quick Press the < M/TONE > button, **"PAGE-XX"** will be displayed at the bottom of **LCD**, and **"PXXX"** will be displayed at the top right corner.

2). Rotate the < > knob **LCD** upper proper corner display **"PXXX"** to select he storage address, can also combine the use of Quick Press or hold the < AUTO >/< AUTO > button for 2 seconds (continuous page adjustment) to select the addition or subtraction page, and then Quick Press the number keys (0-9), after selecting the address, Quick Press the < M/TONE > button LCD below the shows of **"SAVED"** to complete the storage of the station. Another way:You Press and Hold the numeric key (0~9) for 2 seconds to store directly to the (0~9) address of the current page.

Operation Demonstration: Store 107.5 MHz to address P168 (i.e., address 8 on page 16).

1). Power on the radio and adjust the frequency to 107.5 MHz.

2). **Method 1:** Quick Press the < M/TONE > button, rotate the < > knob to adjust to the P168 position (**LCD** shows **"PAGE-16"** at the bottom and **"P168"** at the upper right corner), Quick Press the < M/TONE > button to finish saving.

Method 2: Quick Press the < M/TONE > button, then Quick Press or hold the < AUTO >/< AUTO > button for 2 seconds (continuous page adjustment) to adjust the page to **PAGE-16** (**"PAGE-16"** is displayed at the bottom of the **LCD**, and "P16X" is displayed at the upper right corner). Quick Press the < 8 > button "P168" is displayed on the upper right corner of **LCD**, then Quick Press the < M/TONE > button **"SAVED"** is displayed on the lower part of **LCD** to save the station.

Method 3: Quick Press the < M/TONE > button , then Quick Press or hold the < AUTO > / < AUTO > button for 2 seconds (continuous page adjustment) to adjust to **PAGE-16**(**"PAGE-16"** is displayed at the bottom of the **LCD**, and **"P16X"** is displayed at the upper right corner). Press and Hold the < 8 > button for 2 seconds, **"SAVED"** is displayed at the bottom of the **LCD**, and the station is saved.

4. Use DELAY Mode Auto Search To Store Stations

Tip: This function is effective only in **"DELAY"** mode (See page 8 for **STOP/DELAY Mode Setting Method** for details).

Power on the radio and switch to **"FREQ"** mode; Press and Hold the < AUTO > / < AUTO > button for 2 seconds to enter the searching radio station. After receiving the valid radio station, **LCD** will show**"DELAY-XX"**, then Quick Press the < M/TONE > button, then the current radio station has been stored.

BROWSE SAVED STATIONS: < > BROWSE/(0~9) NUMERIC KEY BROWSE

1.< > Browse Storage Radio: Power on the radio and switch to **"MEMO"** mode, and rotate the < > knob to browse the saved stations.

2. (0~9) Numeric Key Browse: Power on the radio and switch to "MEMO" mode; Quick Press or hold the < AUTO > / < AUTO > button for 2 seconds (continuous page adjustment) to adjust the page ,then Quick Press the numeric key (0~9), and you can browse the stations stored in address (0~9) of the current page.

AUTOMATIC BROWSING OF SAVED STATIONS

Power on the radio and switch to **"MEMO"** mode, and Press and Hold the < AUTO > or < AUTO > button for 2 seconds to enter auto browse for stored stations; Quick Press any button to exit .

DELETING STORED RADIO STATIONS

Four Methods Of Deleting Stations:

Deleting a specific page **(PAGE0~99)** / Deleting a station with a particular address **(P000~P999)** / Deleting a station by browsing/deleting the stored stations on all pages.

1. Delete The Specified Page (PAGE0~99)

1). Power on the radio, Press and Hold the < DEL > button for 2 seconds, **"DEL"** and **"PAGE-XX"** will be displayed alternately on the **LCD** to enter the deletion mode.

2). Quick Press or hold (continuous page change) the < AUTO > / < AUTO > button for 2 seconds to adjust the page to be deleted, Quick Press the < DEL > button to complete the deletion, and the **LCD** displays **"PXX D OK"**, **"PXX"** means **XX** page.

3). Quick Press the < PAGE TIME > button to exit the delete operation.

2. Delete The Specified Address Radio Station (P000~P999)

1). Power on the radio, Press and Hold the < DEL > button for 2 seconds, **LCD** will show **"DEL"** and **"PAGE-XX"** alternately to enter the delete mode.

2). Quick Press the < AUTO > or < AUTO > button to adjust the page, and Quick Press 0~9 to delete the corresponding (0~9) radio station on the current page; after deletion, **LCD** will show **"PXXFX D OK"**, **"PXXFX"** (the Xth address of the **XXth** page of the radio station).

3). Quick Press the < PAGE TIME > button to exit the delete operation.

3. Browse and Delete Radio Stations

1). Power on the radio, Press and Hold the < DEL > button for 2 seconds, **LCD** will show **"DEL"** and **"PAGE-XX"** alternately, then enter the delete mode.

2). Rotate the < > knob to browse the radio station. The upper right corner of the **LCD** will show the radio station's address **"PXXX"**. To delete the currently stored radio station, Quick Press the < DEL > button. After deletion, the **LCD** will show **"PXXFX D OK"**. **"PXXFX"** represents the X address of the **XX** page of the radio station.

3). Quick Press the < PAGE TIME > button to exit the delete operation.

4. Delete All Pages Of Stored Radio

Power on the radio, Press and Hold the < DEL > button for 10 seconds until the **LCD** shows **"ALL DEL"**, the stations are all deleted.

EDIT PAGE NAME

Demonstration:

Example: Rename Page 00 to "ABC".

1). Power on the radio, select the page to be renamed **"PAGE-00"** in **"MEMO"** mode.

2). Press and Hold the < EDIT > button for 2 seconds, enter page rename status, **LCD** appears cursor " _ " flashing.

3). Rotate the < > knob to select the letter **"A"**, then Quick Press the < PAGE TIME > button to move the cursor, then rotate to the letter **"B"**, similarly repeat the operation 8 times, and the renaming is complete.

Tips:

(1). To display a blank at the cursor position, while the cursor is flashing " _ ", refrain from rotating the < > knob; simply Quick Press the < PAGE TIME > button to skip the current cursor position. For instance, after selecting **"ABC"**, if the following five positions are blank, you can consecutively Quick Press the < PAGE TIME > button five times to skip the current cursor position.

(2). To delete the rename of a page, you can Quick Press the < PAGE TIME > button 8 times in a row without rotating the < > knob after step 2, and the page will return to the default **"PAGE-XX"**; or by deleting the page will remove the rename(see **"Delete The Specified Page"** on page 16).

MUTE FUNCTION

Power on the radio, Quick Press the < EDIT > button, **LCD** shows

"MUTE ON" means mute, **"MUTE OFF"** indicates that mute is disabled.

Note: If the squelch function is on, the mute < EDIT > button function will not work.

BACKLIGHT FUNCTION

To Set The Backlight To Always On/10 Seconds Off

Power off the radio, Press and Hold the < DEL > button for 2 seconds, the LCD shows

"LIGHT ON" Backlight is always on.

"LIGHT OFF" The backlight will automatically turn off after 10 seconds with no other operation.

Power On/Off The Backlight

Quick Press the < DEL > button to control the backlight on or off.

LCD SHOWS OFF/ON

LCD Always Shows/Not show after 2 seconds of operation:

Power off the radio, Press and Hold the < 1 > and < 3 > combination buttons simultaneously for 2 seconds, the **LCD** shows:

"DIS ON" to indicate constant visibility when the radio is turned on.

"DIS OFF" to indicate visibility only during radio operation, automatically turning off after 2 seconds of inactivity.

Tip: Turning off the **LCD** reduces interference when receiving feeble signals.

Temporary LCD OFF:

Power on the radio, Quick Press the < 1 > and < 3 > buttons at the same time while powering on the radio can temporarily turn off the **LCD** display. Pressing any button will turn the **LCD** back on.

TONE SWITCHING

Power on the radio, Press and Hold the < M/TONE T.Z/ > button for 2 seconds,the **LCD** shows

"VOICE" indicates news mode.

"MUSIC" indicates music mode.

FM BAND STEREO/MONO

Automatic stereo/mono switching is only possible when headphones/earbuds are plugged in; without headphones/earbuds plugged in, it will always be in mono mode.

Method of operation: Power on the radio and switch to FM band, Plug headphones/earbuds into the right < > socket, and Press and Hold the < BW/ST ALARM > button for 2 seconds to switch between mono/stereo:

LCD shows **"MONO"** indicates mono mode.

LCD shows **"AUTO"** indicates stereo mode.

when the stereo sound is detected, the **LCD** will show **"STEREO"**, and show the " ST. " , if there is no stereo sound, it will show **"MONO"** while not displaying the " ST. ".

Note: It is not possible to set the alarm radio frequency when headphones/ earbuds are inserted.

BANDWIDTH SWITCHING

Power on the radio, and Quick Press the < BW/ST ALARM > button to toggle the bandwidth, the display will show **"BW XXK"** you can also rotate the < > knob to select the bandwidth.

FM bandwidth selection: AUTO / 56 / 64 / 72 / 84 / 97 / 114 / 133 / 151 / 168 / 184 / 200 / 217 / 236 / 254 / 287 / 311 KHz

Note: The FM band bandwidth selection AUTO is the automatic bandwidth.

AM bandwidth selection: 3 / 4 / 6 / 8 KHz

SQUELCH SETTING

Power on the radio, Press and Hold the button on the right knob < > for 2 seconds, and the display will show **"SQUELCH-XX"** (XX=1~9); rotate the < > knob, select 1~9 means the squelch is on, 1~9 represents different squelch level, select **"OFF"** indicates the squelch is off. Quick Press the button of the< > knob again to exit .

BUTTON BEEP SWITCH

Power off the radio, Press and Hold the < R·D·S METER- > button for 2 seconds:

LCD shows **"BEEP ON"**, button beep is on.

LCD shows **"BEEP OFF"**, button beep is turned off.

Note: The radio turns off without a button beep and turns on with a button beep.

LW/MW ANTENNA SWITCHING

Power on the radio and switch to **LW** or **MW** band; Press and Hold the < R·D·S METER- > button for 2 seconds:

LCD shows **"ANT-INT"** means that **LW/MW** reception is using the internal ferrite bar antenna, this mode is suitable for indoor reception (default).

LCD shows **"ANT-EXT"** means that **LW/MW** reception is with tie telescopic antenna, this mode is suitable for outdoor reception.

Note: If you want to use an external antenna to receive LW/MW signals, set it to "ANT-EXT". The ANT interface on the left side of the fuselage is effective for LW/MW external antenna reception.

EXTERNAL ANTENNA SOCKET

This radio can receive signals using an external antenna. Plug the external antenna into the **ANT** < ANT. > socket on the left side of the radio.

Note: For **LW/MW** bands, the external antenna can only be used if switched to **"ANT-EXT"** state; **"AMP ON"** state is suitable for using **Passive External Antenna** (recommended) , and **"AMP OFF"**state is suitable for using **Active External Antenna**. Do not use the external antenna during thunderstorms to prevent lightning strikes.

ANTENNA AMP SWITCH

Power on the radio and switch to **LW** or **MW** band, Press and Hold the < SET METER+ > button for 2 seconds to switch the **AMP** circuit on or off :

LCD shows **"AMP ON"** means the **AMP** line is turned on (default).

LCD shows **"AMP OFF"** means the **AMP** line is turned off.

Note: LW/MW is only effective when "ANT-EXT" is connected to an external mast antenna or external antenna status.(see "LW/MW ANTENNA SWITHING" on page 20 for details).

ANTENNA ATTENUATOR

Power on the radio, Press and Hold the < PAGE TIME >+< 5 > buttons for 2 seconds simultaneously, and the **LCD** will show **"ATT XXDB"** or **"DEFAULT"**, rotate the < > knob, change the attenuation level.**"DEFAULT"** is the default state with no attenuation, **"ATT XXDB"** means attenuation **"XX"** dB. If you select the attenuation state, **LCD** will show " At " flashing, the default no attenuation state does not have the " At " display.

Note: ATT attenuation parameters are field adjustable and will reset to a disabled attenuation state after a band switch or radio shutdown. The next setting remembers the last field attenuation and there are separate parameters for each band.

DISPLAY INFORMATION SWITCHING

With Radio Off: Cyclic Quick Press the < SNOOZE DISPLAY > button, switch time zone time/alarm time display

With Radio On: Cyclic Quick Press the < SNOOZE DISPLAY > button, switch signal indication/time zone time/alarm time/local time display

VOLUME CONTROL

Volume Control: Power on the radio, Rotate the < VOLUME >knob upwards or downwards to select your desired volume level, the **LCD** below shows **"VOL-MUTE, VOL-1 ..... VOL-MAX"**, the volume will gradually increase or decrease.

HEADPHONES/EARBUDS LISTENING

If you need to use headphones/earbuds to listen to the radio, plug the headphones into the right < > socket to switch to the headphones/earbuds output mode.

RADIO SETTINGS

1). Power off the radio, Press and Hold the < SET METER+ > button for 2 seconds, and the display will show **"MW-XXK"** rotate the < > knob, and you can select **"XX-XXXMHz", "FM-XXXK", "FM-R(B)S", "FMDE-XXUS", "LW-XX"**.

2). After selecting the option you want to set, Quick Press the < SET METER+ > button briefly and cyclically to adjust the setting options.

3). To continue setting other options, continue to rotate the < > knob, and then Quick Press the < SET METER+ > button repeatedly to adjust the relevant settings of the current choice.

4). If you want to end the setup, Quick Press the < PAGE TIME > button briefly to finish the setup.

Display the description of the corresponding settings:

"MW-9K"	**MW** frequency step is 9KHz
"MW-10K"	**MW** frequency step is 10KHz
"FM-76~95MHz"	**FM** frequency range is 76.0~95.0MHz
"FM-87.5~108M"	**FM** frequency range is 87.5~108.0MHz
"FM-64~108M"	**FM** frequency range is 64.0~108.0MHz
"FM-87~108M"	**FM** frequency range is 87.0~108.0MHz
"FM-76~108M"	**FM** frequency range is 76.0~108.0MHz
"FM-30K"	**FM** frequency step is 30KHz
"FM-50K"	**FM** frequency step is 50KHz
"FM-100K"	**FM** frequency step is 100KHz
"FM-200K"	**FM** frequency step is 200KHz
"FM-250K"	**FM** frequency step is 250KHz

Note: When 30KHz FM step is selected, it only works in the frequency range of 64~74MHz (OIRT BAND), and when tuned to other fequency range(74.01~108MHz), the step is 100KHz step.

"FM-RDS"	Data received by FM is in **RDS** format
"FM-RBDS"	Data received by FM is in **RBDS** format
"FMDE-75μS"	Time constant for de-emphasis of **FM** is 75 μs
"FMDE-50μS"	Time constant for de-emphasis of **FM** is 50 μs

Note: 75 μs. Used in USA (default)/ 50 μs. ,China,Used in Europe, Australia,Japan.

- **"LW-ON"** **LW** band is On
- **"LW-OFF"** **LW** band is Off

SETTING WORLD TIME

1). Power off the radio, Press and Hold the < M/TONE T.Z/◀))/Q > button for 2 seconds, and the **LCD** will show **"XXX<XX>"**.

2). Rotate the < > knob to switch between codes, **LCD** displays time for each time zone; Quick Press the < PAGE TIME > button to confirm, the upper right corner of the **LCD** will show **"world XX: XX"**, which is the corresponding time zone.

Table 2:UTC time difference

Time Zone	World City and Code
-9	ANC -- Anchorage
+8	BEG -- Beijing
+7	BKK -- Bangkok
+2	CAI -- Cairo
-4	CCS -- Caracas
-6	CHI -- Chicago
+6	DAC -- Dhaka
+5	DEL -- Delhi
-7	DEN -- Denver
+4	DXB -- Dubai
0	GMT -- GMT
+8	HKG -- Hong Kong
-10	HNL -- Honolulu
+3	JED -- Jeddah
+5	KHI -- Kashi
-8	LAX -- Los Angeles
0	LON -- London
+11	NOU -- Noumea
-5	NYC -- New York City
+1	PAR -- Paris
-3	RIO -- De Janeiro
+10	SYD -- Sydney
+9	TYO -- Tokyo
+12	WLG -- Wellington

SETTING THE CLOCK

Notes:

1.The first time you set the clock, you need to select the correct local time zone,so that you will not make a mistake when selecting **UTC**.

2.After setting the local time zone and clock, adjusting the **UTC** will not change the local time zone and clock, only when setting the clock again will change the time zone. For example: the current radio has been set to **UTC "WLG<+8>"**, local time zone **"TYO<+9>"**, if you set the clock directly, then the local time zone becomes **"WLG<+8>"**.

3.Therefore, to obtain accurate world time, the first time you set the local clock, you need to follow the steps: Select the local time zone > Set the clock > Select world time

1). Ensure that you have set the time zone for your current region (see **"Setting World Time"** on page 22 for details).

2). Power off the radio, Press and Hold the < PAGE TIME > button for 2 seconds, **"CLOCK SET"** flashes on the bottom of the **LCD**, and the number of hours flashes.

3). Rotate the < > knob to set hour, Quick Press the < PAGE TIME > button to enter minute setting, minutes flashing, rotate the < > knob to set minutes, Quick Press the < PAGE TIME > button to confirm.

4). The **LCD** shows flashes **"RDS AUTO"** or **"MANUAL"**, Rotate the < > knob to Select **"RDS AUTO"** or **"MANUAL"**, and Quick Press the < PAGE TIME > button to confirm.

RDS AUTO: Receiving **FM** radio stations with **RDS/RBDS** in the **FM** band can automatically update the time.

MANUAL: Manually set the time, does not automatically update the time.

Notes:

1). If the **RDS** is turned off, there is no step 4 operation, and clock setting is completed in step 3. (see **"R(B)DS Switch Setting"** on page 12 for details).

2). In **"RDS AUTO"** mode,if the signal of an **FM** radio station with **RDS** is weak, it may cause an **RDS** decoding error, resulting in a wrong time display.

ALARM CLOCK WORKING MODE SELECTION

Setting The Alarm Time

1). Power off the radio, Press and Hold the < BW/ST ALARM > button for 2 seconds, **LCD** lower shows **"ALARM SET"** flashing, timing symbol " " or " " flashing, hours flashing.

2). Rotate the < > knob to set the hour, Quick Press the < PAGE TIME > button to set the minute, rotate the < > knob to set the minute when the minute is flashing, and finish setting the minute.

3). Quick Press the < PAGE TIME > button **LCD** shows **"DELAY-XX"**, rotate the < > knob to set the alarms duration of the desired alarm (1~99 minutes), Quick Press the < PAGE TIME > button to complete the alarm clock timing setting.

Alarm Working Mode Setting: "SPEAK"/"BUZZER"/"ALARMOFF"

Alarm has 3 modes, 1. Alarm buzzer **"BUZZER"**; 2. Alarm radio **"SPEAK"**, you can set the radio frequency as the alarm frequency. 3. Alarm disable to wakeup **"ALARMOFF"**.

1). Power off the radio, Quick Press the < M/TONE T.Z/ > button, to show **"SPEAK"** at the bottom of the **LCD** and "AL " at the top. The alarm clock will wake-up in alarm radio mode.

2). Quick Press the < M/TONE T.Z/ > button to show **"BUZZER"** at the bottom of the **LCD** and" AL " at the top. The alarm clock will then wakeup in alarm beep mode.

3). Quick Press the < M/TONE T.Z/ > button to show **"ALARMOFF"** at the bottom of the **LCD** and " AL " at the top. The alarm clock will deactivate the alarm wake-up mode.

Alarm Radio Mode Frequency Setting

To set the alarm frequency, turn on the radio to adjust the desired frequency. Then, Press and Hold the < BW/ST ALARM > button for 2 seconds, and **"AL FREQ"** will be displayed at the bottom of the **LCD**, the alarm clock wake-up radio frequency setting is completed. When the alarm is selected to be radio station mode, the radio will select the set frequency to play the station.

Turn Off The Alarm When It Rings

If you want to turn off the alarm after it has been activated, Quick Press the < SLEEP SNOOZE > button briefly to cancel the alarm.

Snooze Function

When the alarm wakeup, Quick Press the < SNOOZE DISPLAY > button to temporarily turn off the alarm. The alarm will go off again after 5 minutes. To disable this feature while still snoozing, Quick Press the < SLEEP > button.

LOCK BUTTON

1). Press and Hold the < SNOOZE DISPLAY > button for 2 seconds, **LCD** " " symbol will flash, enter lock state, all buttons, the < > knob, volume knob is invalid.

2). Press and Hold the < SNOOZE DISPLAY > button for 2 seconds, **LCD** " 🔒 " symbol disappears, enter unlock state, all buttons, the < > knob, volume knob effective.

RESET RADIO

To resolve display errors, button malfunctions, or other abnormalities, use a sharp object like a toothpick to Quick Press the < RESET ⊙ > button once. This will restore everything back to normal.

RESTORE FACTORY SETTINGS

Press and Hold the < 1 > button with a sharp object (such as a toothpick); Quick Press once <RESET ⊙>, until the LCD shows **"RESET..."** Release the < 1 > button, and after about 2 seconds to return to normal, the system settings are restored to the factory settings, All stored stations are erased.

INSTALLATION OF BATTERIES

Open the battery cover on the back of the radio and load one **18650** rechargeable battery correctly according to the polarity labeled in the battery compartment.

Notes:

1).Pay attention to the polarity of the battery, reverse polarity may damage the unit.

2).This unit does not come with **18650** batteries, please purchase their own positive protruding lithium batteries, a good battery can enhance the unit's playback time.

3). The first time the battery is installed, the clock needs to be adjusted. To change the batteries, try to change them before the **LCD** disappears; otherwise, the clock will be reset.

BATTERY LEVEL INDICATION

Description of the symbol display in the upper left corner

1." ": Battery fully charged

2." ": Slightly low battery

3." ": Battery power is low, please charge or change the battery.

4." ": flashing: the battery is dead, the radio will automatically power off, please charge it.

SMART CHARGING

This unit is charged by a **Micro-USB** port, and the charging voltage is 5V; please use a standard 5V charger.

When the charging cable is plugged into the charging port of the unit, the unit will automatically activate the charging circuit and stop when it is fully charged.

Note:

During charging, tuning sensitivity may be affected and noise increased; it is recommended that the radio be turned off for charging.

FREQUENTLY ASKED QUESTIONS (FAQS)

ISSUE	POSSIBLE CAUSE	SOLUTION
Unable to powerable	1.Low battery 2.Buttons are locked 3.18650 battery notcor-rectly installed	1.Renewing a new battery or recharging. (see page 26,27) 2.Press and Hold the lock button to unlock. (see page 25) 3.Proper installation of 18650 batteries. (see page 26)
The radio died	Unexpected interference causes the MCU to enter a dead state.	Perform a complete reset operation on the unit (see page 26)
The radio turns off automatically while in use	1.Low battery 2.Setting up the automat-ic shutdown function	1.Renew the battery or recharge it. (see page 26,27) 2.Reboot. (see page 6) 3.Renew the battery or recharge it .(see page 26)
Incorrect FM frequency range	The FM range doesn't match the local station.	Adjusting the FM frequency range. (see page 22)
MW range and stepping are not	The MW range doesn't match the local stations.	Adjusting the MW stepping. (see page 22)
Automated search or ATS lock station inaccuracies	1.The radio signal is too weak. 2.Strong interference signals in the vicinity	1.Change to manual station search or enter the station frequency directly. (See page 7,10,11) 2.Adjust the antenna, rotate the fuselage direction, and operate Auto Search or ATS. 3.Adjusting the automatic search threshold. (see page 12) 4.Avoid sources of interference, go to the window or outdoor open area without interference to receive the station.

Radio alarm activated. Alarm clock is radio noise.	1.There are no pre-stored stations for reception after a radio alarm. 2.Stations pre-stored for reception after a radio alarm are not broadcast.	1.Re-select the radio frequency of the alarm clock. (See page 24) 2.Change alarm mode to beep alarm. (see page 25)
Can not receive R(B)DS data. Receiving R(B)DS garbled code.	1.A weak radio signal,not receiving R(B)DS data. 2.Radio without R(B)DS 3.FM bandwidth is too narrow	1.Change the antenna position or move to a strong signal location for reception. 2.The radio station itself does not have R(B)DS data, please change to a radio station with R(B)DS data. 3.To change the FM bandwidth, it is recommended to set it to BW AUTO or to widen the bandwidth. (see page 19)
The reception clock has changed on the FM band.	Turn on the R(B)DS auto-calibration function	Stations with R(B)DS will automatically update the time, if you don't need this feature, you can turn it off.(see page 12)
Turning the volume knob gives you sound and then doesn't.	The squelch is on	When the squelch is turned on, the radio will mute weak stations if signal the of the current station falls below the squelch thresh-old. Adjusting the volume knob will temporarily restore the sound, but it will be muted again after a short period. To disable mute, turn off the mute function. (see page 20)
Sometimes mute, some-times not mute./mute button does not work when closing the radio.	The squelch is on	When the squelch function is enabled, the station will mute when the signal is weak. However, if the squelch function is disabled, reception and squelch function will work normally. (see page 20)
R./B. ERR error occurs	Power supply failure/unit failure	1.The battery that may be used has a high internal resistance, resulting in a low current supply for the operating power of the unit. Try replacing the battery with a new one of better quality,or use it when the battery if fully charged, or reduce the volume to lower the power of the unit. 2.Reset to re-power up. (see page 26) 3.If you can't solve the problem after the above attempts, please get in touch with the after-sales personnel to return to the factory for repair.
With power-on, the LCD screen will turn off auto-matically after 2 seconds. The LCD lights up again when you operate it.	The LCD OFF function is turned on.	Setting to "DIS ON" restores the LCD to the normally lit state. (see page 18)
How to Switch LW/MW Telescopic Antenna Reception		(see page 20)
Telescopic antenna receives LW.MW.SW with lower than usual sensitivity	Check that the AMP antenna amplifier is turned off	Turning on the antenna amplifier. (see page 20)
Indoor reception The LW/MW telescopic antenna receives more noise than the internal ferrite bar antenna.	Telescopic antenna for outdoor use, internal ferrite bar antenna for indoor reception	Indoor reception is recommended to use the internal ferrite bar antenna; outdoor reception is suitable for telescopic antenna reception. (see page 20)

Can the reception of FMDX signal or FM weak signal be improved?		You can try the FM signal processing settings, normal listening is recommended to be set in the "DEFAULT" state. (see page 13)
No LW band Input LW frequency display error	LW band closed	Switching on the LW band "LW ON". (see page 21,22)
Radio settings are scrambled		Reset radio parameters to factory settings. (see page 26).
Poor sound on strong signal broadcasts	Bandwidth settings too narrow	Expand or adjust the bandwidth to "AUTO BW" (FM band). (see page 19)
FM has critical frequency interference	FM bandwidth is too wide	Narrow the FM bandwidth or adjust it to "AUTO BW". (see page 19)
The back of the radio may become warm when	Receiver chip work heats	This unit adopts a high-performance car chip, the temperature belongs to the normal working range use!
Can you turn off the alert beep when you receive a station on ATS?	Turned on the button BEEP sound	This unit does not have a specific setting to toggle the beep when ATS receives a station. However, you can disable the beep by turning off the BEEP sound button (refer to page 20).
How do you restore normal stepping when the knob turns fast and the frequency changes quickly?	Knob frequency set to acceleration mode SPEED ON	Turning off the frequency acceleration mode restores the normal mode. (see page 9)
Change of UTC time is not correct	Local time zone not set	You need to select the local time zone before setting the time. (see page 22)
R(B)DS Display Error	Confirm whether the wrong mode is selected as RDS or RBDS mode	Only the United States is RBDS; all other countries are RDS; please choose the correct mode. (see page 22)
Why is the backlight always on?	Turned on the backlight constant light function	Turning off the LCD backlight function (LIGHT OFF) can be canceled. (see page 18)
There is little difference in reception when the external antenna is mounted on the LW/MW.	LW/MW Telescopic antenna setting not turned on	Switching to LW/MW retractable antenna reception function. (see page 20)
FM headset reception without stereo	1.Signal not strong enough 2.FM radio stations	1.Only strong signals can be resolved stereo; When weak signals, relocate or connect external antenna. 2. Stereo mode is not turned on.(see page 19)

PRECAUTIONS FOR USING BATTERIES

1.If the batteries have not been installed for a long time, the clock will stop running but will maintain the stored radio frequency. Reinstalling the battery requires setting the clock.This unit has an automatic shutdown protection function with insufficient battery voltage. When the battery is low, radio automatically powers off. " ▭ " symbol flashes as reminder to replace or charge the 18650 battery.

2.Remove battery when not used for extended periods to prevent leakage and component corrosion.

ROUTINE MAINTENANCE

1. Avoid intense collision or dropping the unit.
2. Do not use corrosive liquid to clean the unit.
3. Do not use the unit in high temperature and moisture environments.
4. Strictly avoid charging non-rechargeable lithium batteries. Remove battery when radio is not in use for extended periods.
5. Do not change the unit's internal parts by yourself.

MAIN PERFORMANCE INDICATORS

Frequency Range/Tuning Step

FM: 64-108MHz (suitable for Russia/Eastern Europe)
76-95MHz (suitable for Japan),76-108MHz (suitable for School)
87-108MHz (suitable for Europe, Oceania, Africa, Asia)
87.5-108MHz (suitable for China, Americas)
(Tuning step is 250KHz/200KHz/100 KHz/50KHz/30KHz/10KHz)

SW: 1711-27000KHz (Tuning step is 1KHz/5KHz)

MW: 522-1620KHz (Tuning step is 1KHz/9KHz)
520-1710KHz (Tuning step is 1KHz/10KHz)

LW: 144-519KHz (Tuning step is 1KHz/3KHz)

Sensitivity:

Retractable Antenna Reception:	**Selectivity:**
FM (S/N=30dB) ≤ 0.5uv **SW** (S/N=20dB) ≤ 10uv **LW** (S/N=20dB) ≤ 10uv **MW**(S/N=20dB) ≤ 10uv	**FM** ≥ 60dB (±150KHz) **SW** ≥ 60dB (BW=3KHz/±5KHz) **LW** ≥ 60dB (BW=3KHz/±9KHz) **MW** ≥ 60dB (BW=3KHz/±9KHz)
Internal ferrite bar antenna Reception:	**S/N Ratio:**
LW (S/N=20dB) ≤ 2mV/m **MW**(S/N=20dB) ≤ 1mV/m	**FM** ≥ 60dB **LW** ≥ 60dB **SW** ≥ 60dB **MW** ≥ 60dB

FM Stereo Crosstalk: ≥40dB

Output Power: ≥ 1W (at 10% harmonic distortion)
Speaker: 4Ω 3W
Quiescent Current: ≤ 190mA
Shutdown Current: ≤ 150uA
Headphone Input: 3.5mm / 32Ω
Power Supply:3.7V (18650 Li-ion battery x 1) or external DC 5V
Charger / Power:5V/500MA, micro USB socket
Dimensions: 134(W)x76(H)x30(D)mm
Weight (excl. battery): 200g

NEED HELP? CONTACT US.

Company Website: **http://www.qodosen.com**

Contact email:**qodosen@qodosen.com**

To ensure full warranty coverage or product updates,please visit **http://www.qodosen.com** for details.

To receive better service for your product, it is recommended that you first send an email to **qodosen@qodosen.com** or consult the seller for problem identification and troubleshooting.

If further service is required, the technical staff will instruct how to proceed based on whether the radio is still under warranty or needs non-warranty service.

If your product is still in warranty and the **QODOSEN** service representative determines that warranty service is needed, a return authorization will be issued and instructions for shipment to an authorized warranty repair facility.

Please do not return your radio without a return authorization.

Bandwidth Selection/Alarm Timer Setting/Alarm Radio Setup/FM Stereo/Mono Setting
Bandwidth Selection: Power on the radio and quick press to select the bandwidth, or turn the knob to select the bandwidth. ***(see page 19)***.
Alarm Timer Setting: Power off the radio, press and hold (2s) to enter the alarm clock setting; rotate the knob to adjust the alarm clock parameters, in turn, quick press the <PAGE> button to switch the alarm clock parameters needed to be adjusted (alarm clock hours. Minutes. Alarm duration. Finish the alarm setting) .***(see page 24)***.
Alarm Radio Setup: power on the radio, press and hold (2s) to set the radio frequency of the alarm timer. ***(see page 25)***.
FM Stereo/Mono setup: Power on the radio to switch to FM band, plug the earbuds, then press and hold (2s) to select the FM stereo or FM mono mode. ***(see page 19)***.

Radio Setting/Meter Band Switching/Frequency Fast Tuning/FM Signal Procesing /AM Antenna AMP Switching
Radio Setting: Power off the radio power, press and hold (2s) to enter the radio setting; rotate the knob to switch the option; cycle quick press to set the parameter of the current option; quick press the <PAGE> button to exit (you can set the MW stepping/FM stepping/RDS/RBDS/FM frequency range/FM de-emphasis 50us/70us) .***(see page 21)***.
Meter band switching: Power on the radio and switch to SW band; quick press to select meter band. ***(see page 11)***.
Frequency Fast Tuning: Power on the radio and switch to FM/LW/MW band; quick press to tune frequency. ***(see page 11)***.
FM signal processing: Power on the radio and switch to FM band, press and hold (2s) to FM signal processing.***(see page 13)***.
AM Antenna AMP Switching: Power on the radio and switch to AM band, press and hold (2s) to switch the antenna AMP switch (LW/MW need to switch external antenna mode to switch). ***(see page 20)***.

R(B)DSinformation switching/Meter band switching/In-meter band ATS/Frequency fast tuning/Button BEEP sound switching/R(B)DS switching/AM antenna switching
R(B)DS information switching: Power on the radio and switch to FM band, turn on RDS(see <RADIO SETTTING> setting ***(see page 21)***, quick press to switch RDS information. ***(see page 12)***.
Meter band switching: Power on the radio and switch to SW band, quick pressto meter band downward switching. ***(see page 11)***.
In-meter band ATS: Power on the radio and switch to SW band, quick and hold(2S) to enter current band ATS mode. ***(see page 11)***.
Frequency fast tuning: Power on the radio and switch to FM/LW/MW band, quick press, frequency tune .***(see page 11)***.
Button BEEP sound switching: Power off the radio, press and hold(2S)to button BEEP off (BEEP OFF)/on (BEEP ON) .***(see page 20)***.
R(B)DS switching: Power on the radio and switch to SW band, press and hold(2S)to switch R(B)DS on (RDS ON)/off (RDS OFF) .***(see page 12)***.
AM antenna switching: Power on the radio and switch to LW or MW band, press and hold(2S)to switch the Telescopic Antenna Antenna(ANT-EXT)/ Internal ferrite bar antenna(ANT-INT). ***(see page 20)***.

Rename Page Editor/Mute Switch
Rename Page Editor: (see page 17 for detailed operation).
MUTE switch: Power on the radio, then quick press to switch MUTE ON /MUTE OFF. (see page 18)

Station Delete/Backlight setting/Backlight on or off
Station Delete: (see page 16~17 for detailed operation).
Backlight Setting: Power off the radio,press and hold (2s) to switch the Backlight to LIGHT ON or LIGHT OFF. ***(see page 18)***.
Backlight on or off: Quick presss to switch the Backlight on/off. ***(see page 18)***.

World Time Zone Selection/Alarm Mode Setting/Store Radio Station/Tone Setting
World time zone selection: Power off the radio, press and hold (2s) to enter the time zone selection, quick press to switch the time zone; you can also turn the knob to switch the time zone, quick press <PAGE> button to exit. ***(see page 22)***.
Alarm Mode Setting: Power off the radio and Cyclic quick press to switch alarm beep/ alarm radio/off alarm clock.***(see page 25)***.
Stored radio stations: (see page 14 for detailed operation).
Tone setting: Power on the radio, press and hold (2s) to switch the tone (MUSIC/VOICE). ***(see page 19)***.

Power on/sleep timer/Turn off the alarm clock
Power on: Quick press . ***(see page 6)***.
Sleep timer: Press and hold (2s) to power on the radio, turn the knob to set the sleep timer "1~99" minutes, If you select "ON" to turn off the sleep timer.***(see page 6)***.
Turn off the alarm clock: Quick press the alarm off button when the alarm wakes up. ***(see page 25)***.

Button Lock/Snooze/Information Display
Lock button: Press and hold (2s).***(see page 25)***.
Unlock button: Press and hold (2s).***(see page 25)***.
Snooze button: When the alarm wakes up, a quick press turns it off and wakes it up again after 5 minutes.***(see page 25)***.
Information display: Cyclic quick press to display clock/alarm/time/ radio sensitivity/signal-to-noise ratio.***(see page 21)***.

Volume Adjustment:
Power on the radio and turn the volume knob to adjust the sound volume. ***(see page 21)***.

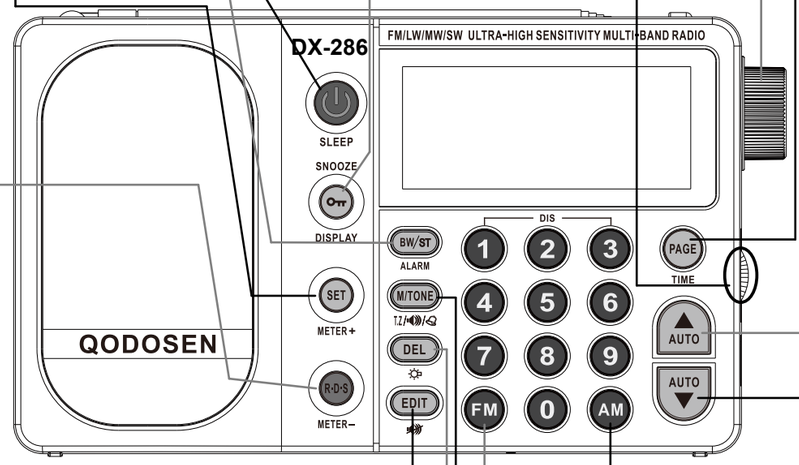

FM Band Switching/FM Band ATS/Confirmation of FM Frequency Input
FM band switching: Power on the radio, then quick press to switch to FM band. ***(see page 7)***.
FM band ATS: Power on the radio and switch to SW band, press and hold (2s) to enter ATS to search the stored stations automatically .***(see page 9)***.
Confirmation of FM Frequency Input: After inputting the corresponding FM frequency by numeric keys, quick press to confirm the corresponding FM frequency. ***(see page 10)***.

LW. MW.SW band switching/LW.MW.SW band ATS/Confirmation of LW.MW.SW frequency input
LW.MW.SW band switching: Power on the radio, then quick press to switch to LW.MW.SW band. ***(see page 7)***.
LW.MW.SW ATS: Power on the radio and switch to SW band, press and hold (2s) to enter the ATS corresponding to the current band (LW.MW.SW) to automatically search for the stored station. ***(see page 9)***. **(LW band can be turned on or off; see <RADIO SETTTING> setting)**.***(see page 21)***.
Confirmation of LW.MW.SW frequency input: After inputting the corresponding LW.MW.SW frequency by numeric keys, quick press this button to confirm the corresponding LW.MW.SW frequency .***(see page 10)***.

Multi-function Knob/Step Setting/Squelch Setting/Fast Adjustment Setting
Multi-function Knob: Used to adjust the time, adjust the frequency, adjust the memory address, adjust the bandwidth, adjust the squelch noise.
Step setting: Power on the radio and quick press to the left, set the step (AUTO.FAST. SLOW.STOP).***(see page 8)***.
Squelch setting: Power on the radio, press and hold (2s) to the right, enter the squelch setting, rotate the knob can be adjusted level, quick press again to confirm. ***(see page 20)***.
Fast Adjustment Setting: Power off the radio, press and hold (2s) to switch the frequency on (SPEED ON)/ off(SPEED OFF). ***(see page 9)***.

Memory. Frequency switching / Operation confirmation / Clock setting / Auto search tuning threshold setting
Memory. Frequency switching: Power on the radio and quick press to switch between "MEMO" / "FREQ" mode. ***(see page 7)***.
Operation confirmation: Other settings are completed, quick press to exit the operation.
Clock setting: power off the radio, press and hold (2s) to enter the time setting, rotate the knob to adjust the time parameters, quick press to switch the alarm clock parameters need to be adjusted (time hours, minutes, RDS auto-alignment), RDS automatic time switch, Complete the clock setting). ***(see page 23)***.
Auto search threshold setting: Power on the radio, press and hold (2s) to switch auto search threshold. ***(see page 12)***.

Frequency Up/Page Up/Memory Mode Setting/Auto Search Station/Stored station browsing
Frequency Up: Power on the radio and switch to "FREQ" mode; quick press to frequency up.***(see page 7)***.
Page up: Power on the radio and switch to "MEMO" mode, quick press to page up. ***(see page 14)***.
MEMORY Mode Setting: Power off the radio, press and hold (2s) to switch ATS memory mode skip mode(ATS_JUMP))/overwrite mode(ATS-COVER).***(see page 8)***.
Auto search station: Power on the radio and switch to "FREQ" mode, press and hold (2s) to auto search station. ***(see page 9)***.
Stored station browsing: Power on the radio and switch to "MEMO" mode, Press and hold (2s) to browse the stored stations automatically. ***(see page 16)***.

Frequency down/Page down/Auto search mode setting/Auto search station/Stored station browsing
Frequency down: Power on the radio and switch to "FREQ" mode, quick press to decrease frequency . ***(see page 7)***.
Page down: Power on the radio and switch to "MEMO" mode, quick press to page down .***(see page 14)***.
Auto search mode setting: Power off the radio, press and hold (2s) to switch to auto radio mode (STOP), stop mode/delay auto search mode (DELAY-XX), delay mode; rotate the knob to set the delay time, quick press <PAGE> to confirm the exit .***(see page 8)***.
Auto search for radio station: Power on the radio and switch to "FREQ" mode, press and hold (2s) to auto search for radio station .***(see page 8)***.
Stored station browsing: Power on the radio and switch to "MEMO" mode, Press and hold (2s) to browse the stored stations automatically. ***(see page 16)***.

Button combinations:
LCD Auto OFF after power on/temporary LCD OFF after power on.
LCD turns off automatically after power on: Power off the radio, press and hold (2s) <1>and <3> buttons simultaneously to switch LCD off mode (DIS OFF)/on mode (DIS ON). ***(see page 18)***.
Turn on LCD off temporarily: Power on the radio and quick press the <1> and <3> buttons simultaneously to switch LCD on/off .***(see page 18)***.
Antenna attenuation setting: Power on the radio and quick press the <PAGE>and<5> buttons simultaneously to enter the antenna attenuation level setting, select the knob adjustment level, quick press the <PAGE> button to confirm and exit. ***(see page 21)***.