AN1003

Multilayer Chip Antenna for

2.4GHz & 5~6GHz Wireless Communication

3F, No.14, Lane 235, Baociao Rd., Sindian Dist, New Taipei City 231
Tel : +886-2-2911-7997 Fax : +886-2-2918-5200
www.rainsun.com / sales@rainsun.com

AN1003 Chip Antenna

◆ Features

- Light weight and low profile 10.5mm(L)X3.2mm(W)X1.9mm(H)
- Omni-directional in azimuth
- Lead (Pb) Free

◆ Applications

- 2.4GHz & 5~6GHz wireless communications
- 2.4GHz & 5~6GHz Modules
- 802.11a/b/g Wireless LAN System

Specifications

Center frequency	2.45GHz & 5~6GHz
Operation temperature	-40 ~ +85 ˚C
Storage temperature	-40 ~ +85 ˚C
VSWR	2.0 (max)
Input Impedance	50 Ohm
Power handling	3W (max)
Bandwidth	2.45GHz 70MHz 5~6GHz 500MHz
Azimuth beamwidth	Omni-directional
Polarization	Linear

Pin configuration

Top view

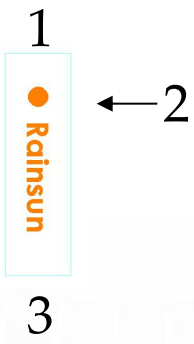

Pin No	Pin assignment
1	Feed termination
2	Feed point mark
3	Solder termination

Dimensions

Symbol	Dimensions(mm)
A	10.5 ± 0.20
B	3.2 ± 0.20
H	1.90 ± 0.20

PCB Foot Print

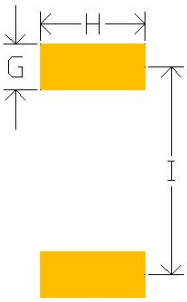

Symbol	Dimensions(mm)
G	2
H	3.0
I	8.8

Application design guide

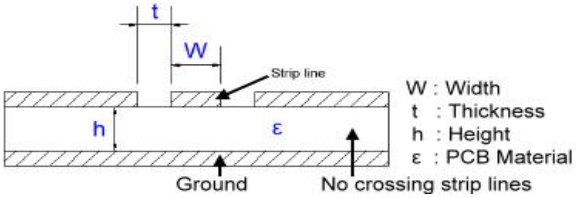

Best Choice

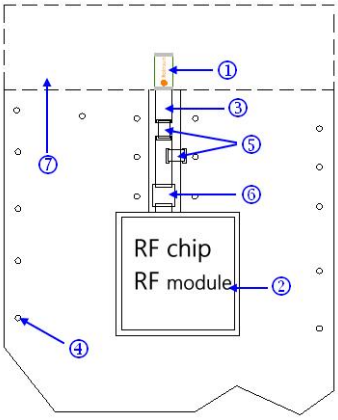

Acceptable

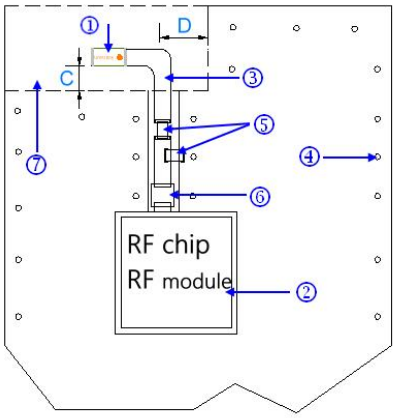

Ground plane area

Clearance area

1. **Placement of the antenna**
   The antenna shall be placed on a area without underlying ground plane at the edge of the PCB oriented as above. Ground plane area surrounding the antenna should be with minimum clearence 3mm.
   DO NOT pleace the antenna on the PCB edge with V-cut. The antenna body size is bigger than passive component. Antenna may damage on the V-cut snap off. In PCB panel layout, CNC board edge is better then V-cut edge.
2. **Placement of RF chip set or module**
   To avoid losses in the strip line, the module shall be placed as close to the antenna as possible.
3. **Strip line**
   The strip line impendence must be dimensioned according to your specific PCB (see fig.2) to 50 Ohm. No crossing strip lines are allowed between the strip line and its ground plane.
4. **Via Connections on PCB**
   To avoid spurious effects via connections must be made to analogue ground. Via connection depends on PCB layout design. Figure for reference only.
5. **Component matching**
   Component values are depending on antenna placement, PCB dimensions and location of other components. PCB dimension and antenna location will effect the antenna frequency.
6. **DC Block**
   It might be needed depending on RF Module or chip hardware design.
7. **Clearance**
   No components allowed within the clearence area with a minimum distance to other components. The minimum distance is 3mm.

Recommended Test Board Pattern

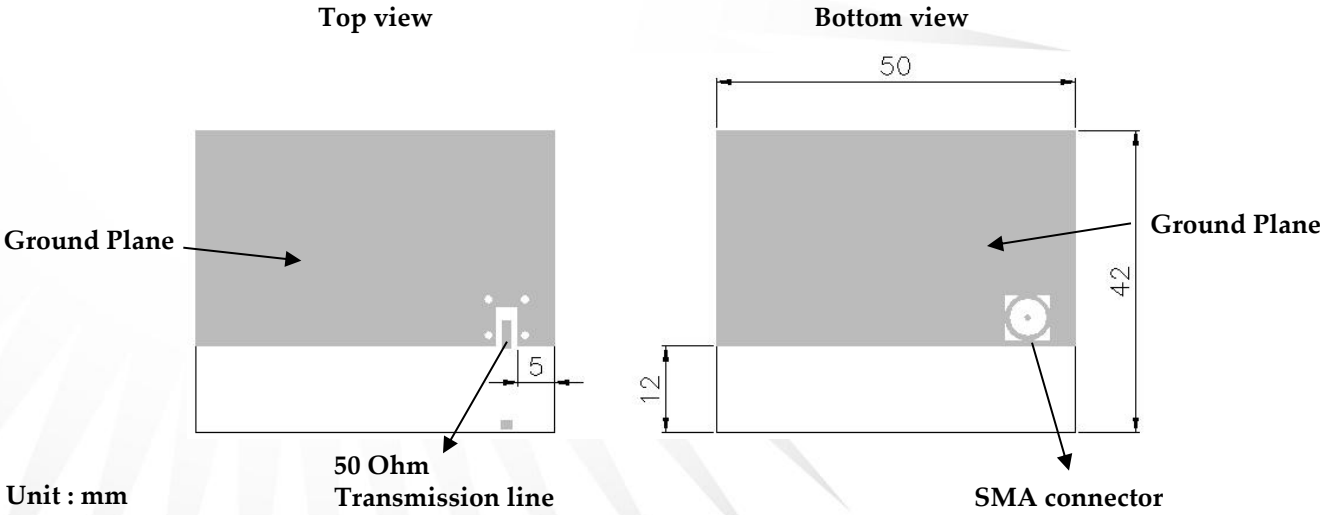

Unit : mm
Board thickness : 0.8mm
Board material : FR4

Fig-1

Testing Setup

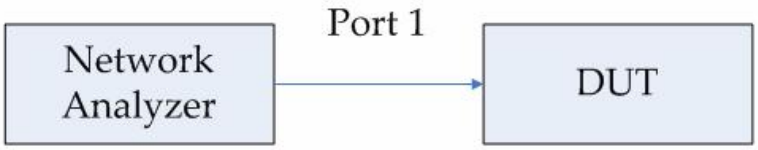

Measurement

Testing Instrument:
Anritsu 37369C VNA(Vector Network Analyzer)

VNA calibrate with 1 path reflection only calibration sequence on test board feed point.

The test board dimension and it's layout is the same as Fig-1.

Typical Electrical Characteristics

Return loss

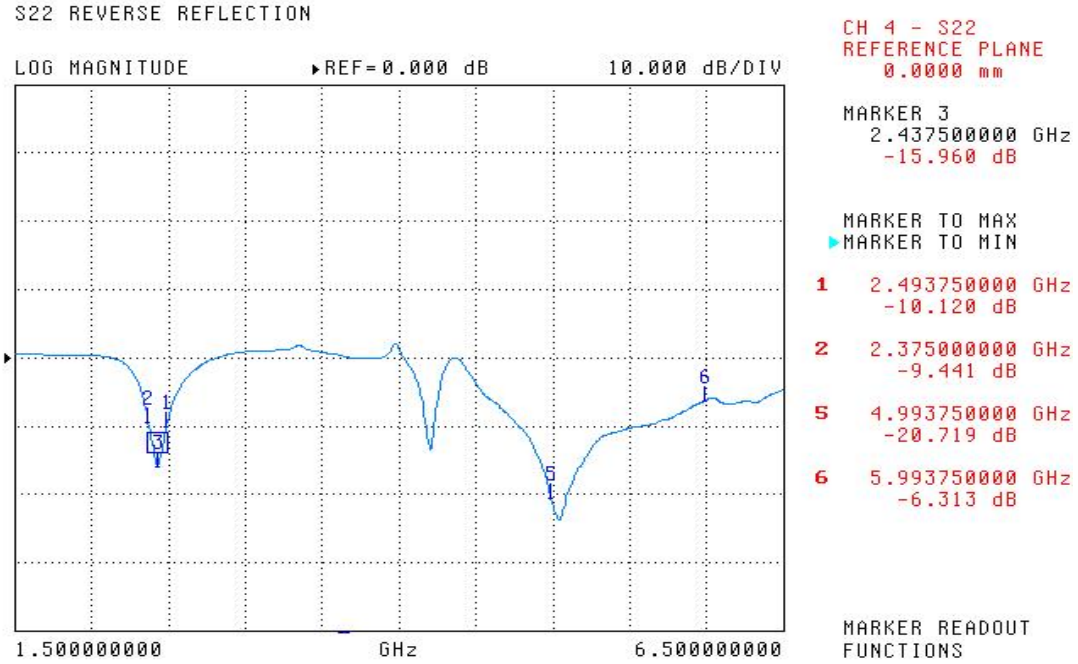

Smith Chart

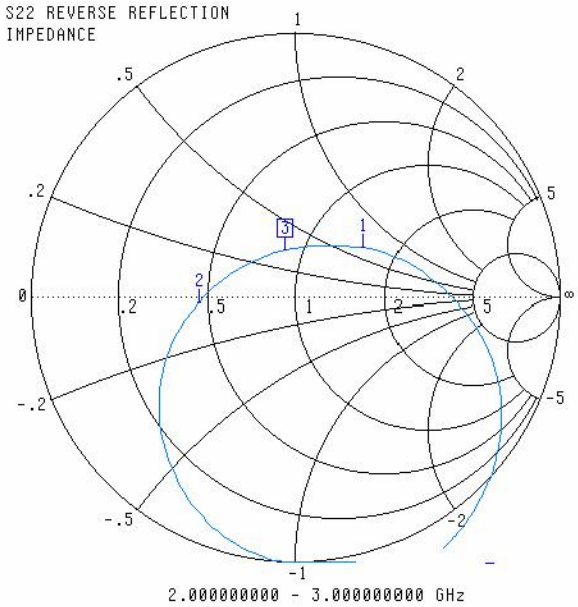

Marker data:
1 : f=2.493 GHz
2 : f=2.375 GHz
3 : f=2.437 GHz

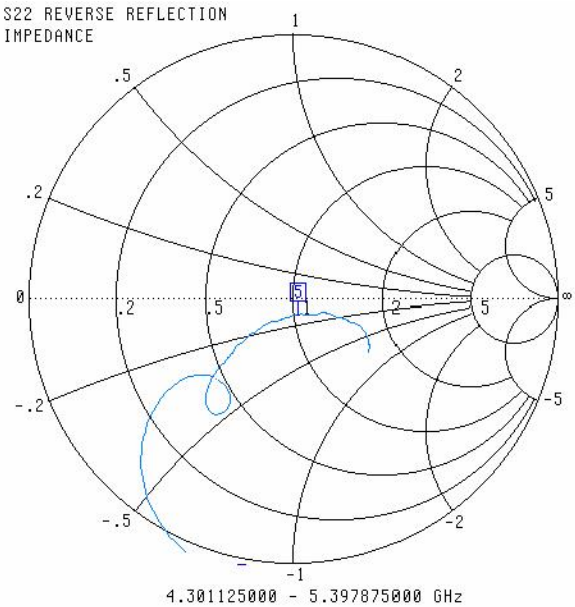

Marker data:
4 : f=4.998 GHz

Efficienty test

Frequency	E Total. dB(dBi)	Efficiency( )
2400MHz	1.51	64%
2410MHz	1.38	62%
2420MHz	1.30	62%
2430MHz	1.32	63%
2440MHz	1.15	63%
2450MHz	1.19	62%
2460MHz	1.16	62%
2470MHz	1.13	63%
2480MHz	1.42	62%
2490MHz	1.46	60%
2500MHz	1.17	58%
5000MHz	-1.44	19%
5100MHz	1.27	31%
5200MHz	1.15	27%
5300MHz	0.18	22%
5400MHz	-0.17	21%
5500MHz	0.01	25%
5600MHz	0.54	30%
5700MHz	-1.22	21%
5800MHz	-0.96	19%
5900MHz	0.61	26%
6000MHz	-0.01	22%

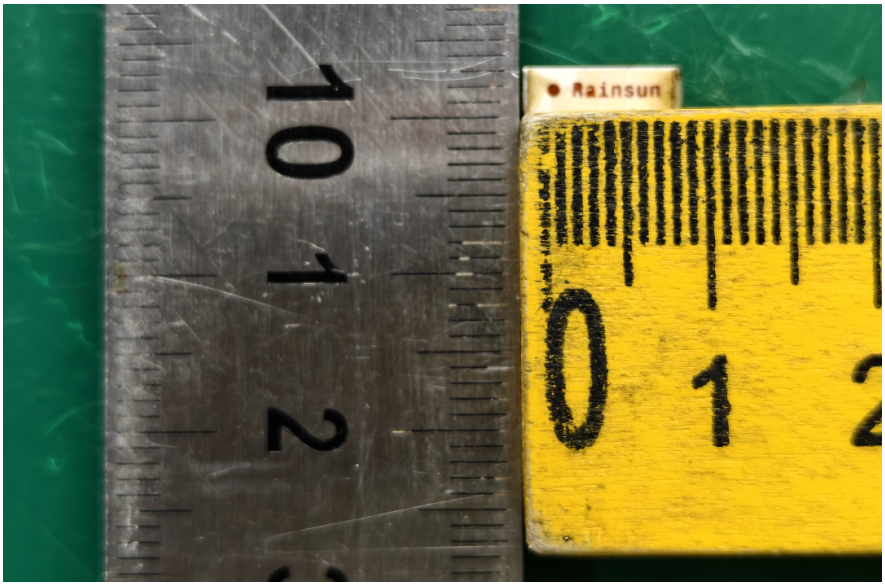

Typical Radiation Patterns

2.4 GHz Phi=0

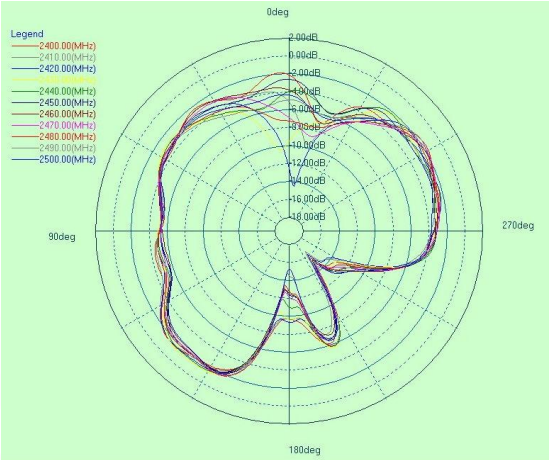

5GHz Phi=0

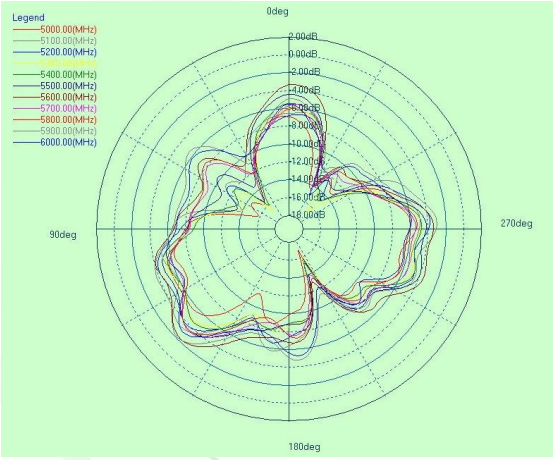

2.4 GHz Phi=90

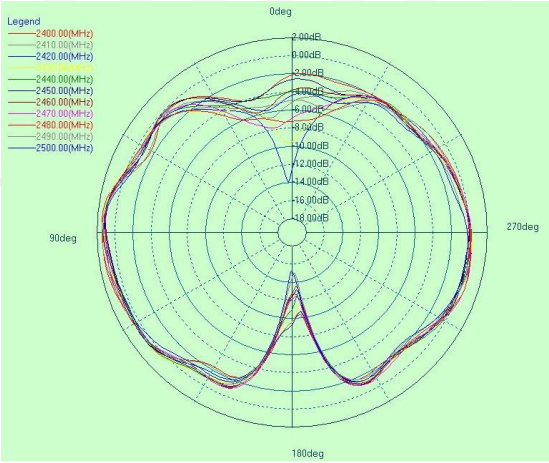

5GHz Phi=90

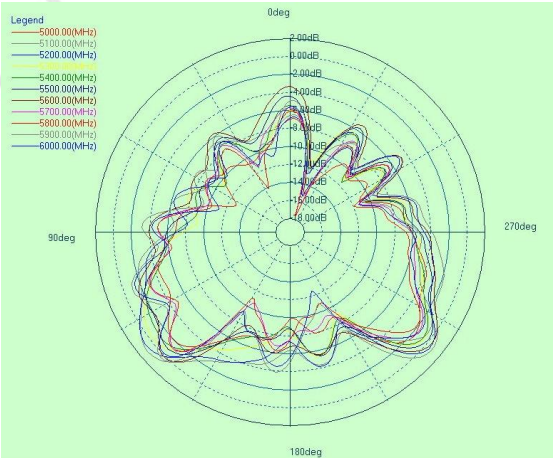

2.4 GHz Theta=90

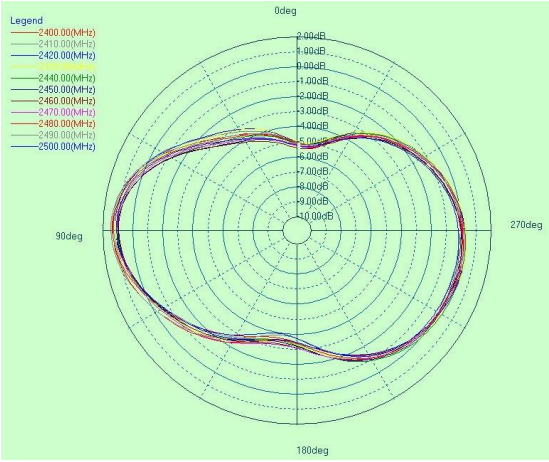

5 GHz Theta=90

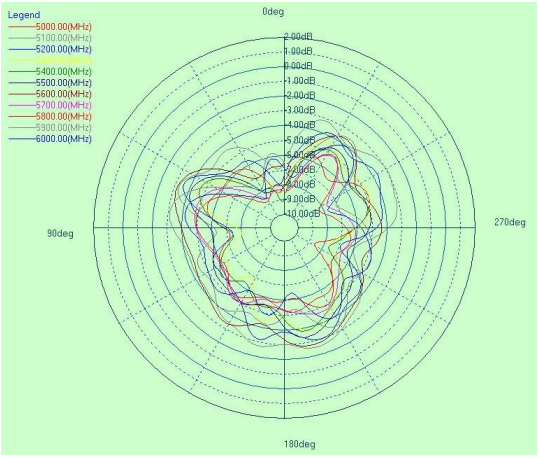

Typical Soldering Profile for Lead-free Process

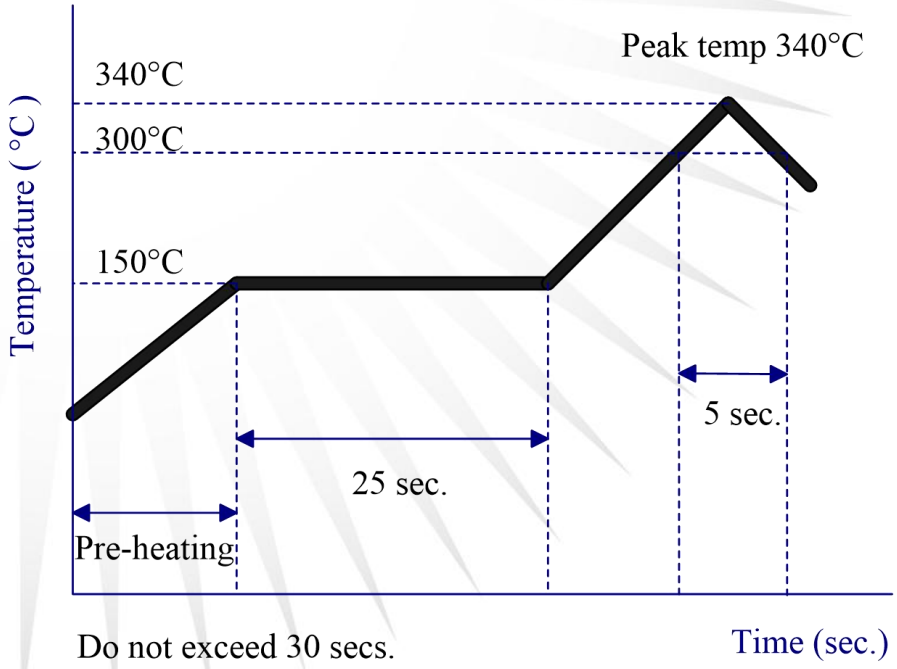

Reflow Soldering

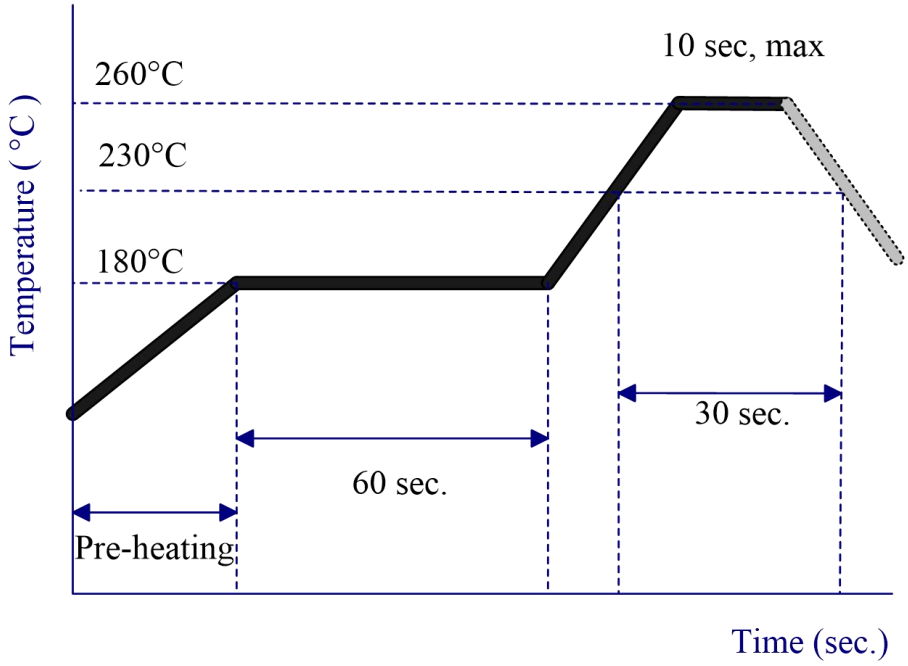

Packing

Blister Tape Specifications

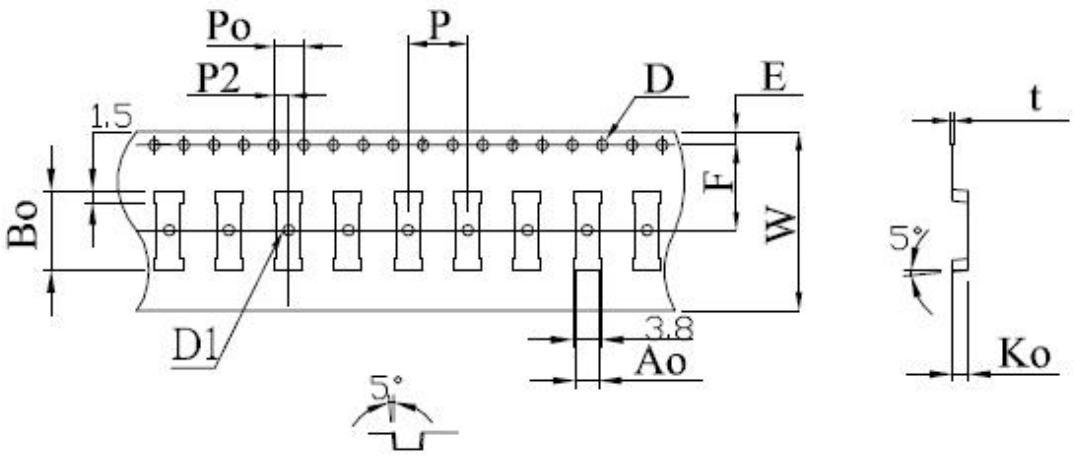

Symbol	Dimension	Tolerance	Unit
W	24.00	± 0.30	mm
E	1.75	± 0.10	mm
F	11.50	± 0.10	mm
D	1.50	+ 0.10 - 0.00	mm
D_1	1.50	+ 0.25 - 0.00	mm
P_0	4.00	± 0.10	mm
P	8.00	± 0.10	mm
P_2	2.00	± 0.10	mm
A_0	3.20	+ 0.10 3.20	mm
B_0	10.60	± 0.10	mm
K_0	2.20	± 0.10	mm
t	0.30	± 0.05	mm

Reel Specifications

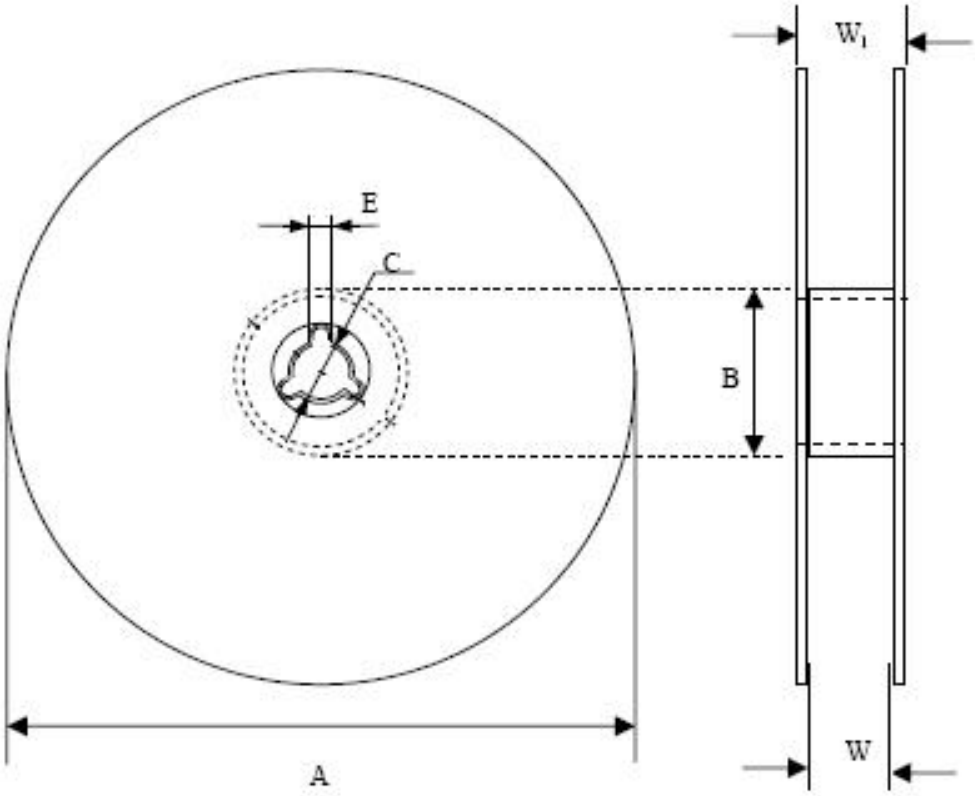

Quantity Per Reel	Tape Width (mm)	A (mm)	C (mm)	B (mm)	E (mm)	W (mm)	W_1 (mm)
3,000	24	330±1	13.0±0.5	100.0±0.5	2.2±0.5	24.0±0.5	28.9±0.2