AccuMEMS

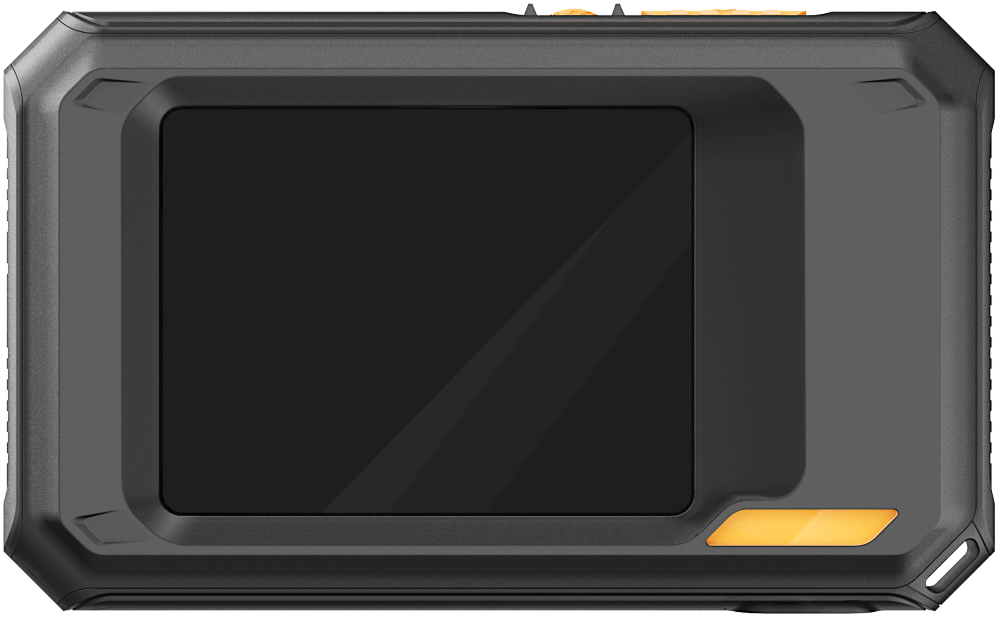

TT Series

Pocket Thermal Imager

User Manual

Scan to Get the Latest UM

support@accumems.com

© Hangzhou Accumems Technology Co., Ltd. All rights reserved.

Manual Usage Guidelines

This manual contains functional descriptions and product usage/management guidelines for various imager models. Due to functional differences among models within the same series, the manual may include explanations that are not applicable to your specific model. All pictures, charts, and other information provided herein are for descriptive and explanatory purposes only and are subject to change without notice due to firmware updates or other reasons. Please note that information regarding new features in the latest firmware may not be included in a timely manner. Use this manual under the guidance and assistance of professionals trained in supporting the product.

For more information or technical support, please visit our official website www.accumems.com or send an email to support@accumems.com.

Trademarks Acknowledgement

AccuMEMS and other AccuMEMS's trademarks and logos are the properties of Hangzhou Accumems Technology Co., Ltd. in various jurisdictions. Other trademarks and logos mentioned are the properties of their respective owners.

CONTENTS

1. Safety Instruction 1

1.1 Power Supply 1

1.2 Battery 1

1.3 Using Environment 2

1.4 Transportation 3

1.5 Maintenance 3

1.6 Emergency 3

1.7 White Supplement Light 4

1.8 Laws and Regulations 4

1.9 Recycling 4

2. Product Appearance 5

3. Getting Started 7

3.1 Charging for the Imager 7

3.2 Power On/Off the Imager 7

3.3 Menus and Controls 8

4. Usage Scene Configuration 11

4.1 Choose a Usage Scene 11

4.2 (Optional) Configure Usage Scene Parameters 14

5. Temperature Measurement 16
5.1 Measurement Tools Configuration 16
5.2 Temperature Accuracy Parameters Configuration 17
5.3 Alarm Configuration 19
6. Display Configuration 20
6.1 Brightness Configuration 20
6.2 UIRA-IR Configuration 20
6.3 Image Mode Configuration 20
6.4 Level & Span Configuration 21
6.5 On-Screen Info Configuration 22
7. Pictures and Videos 23
7.1 Capture Pictures 23
7.2 Record Videos 24
7.3 View Pictures and Videos 25
7.4 Manage Files 25
7.5 Manage Albums 27
7.6 Export Files 28
8. Device Connection 29
8.1 Connect via Hotspot (If Applicable) 29

9. Maintenance **30**

9.1 Time and Date Configuration 30

9.2 Unit Configuration 30

9.3 View Imager Information 30

9.4 Format Memory 30

9.5 Logs Configuration 31

9.6 Upgrade 31

9.7 Restore Imager Configuration 31

10. Guidance for Common Thermal Imaging Operations **32**

10.1 Can the UIRA-Scene Algorithm Detect Water Leaks, Insulation Issues or Heat Irregularities with 100% Accuracy? 32

10.2 Factors may Interfere with the Detection Results of UIRA-Scene 32

10.3 Improve Water Leak Detection Success Rates 33

10.4 Higher-Quality Image 33

10.5 Guidance on Using Thermal Imaging for Common Water Leak Detection 34

10.6 Detect Water Pipe Leaks 35

10.7 Can the Thermal Imager Penetrate Walls or Floors?

.....38
10.8 Check a Thermal Imager's Temperature Accuracy ..38
10.9 Frozen Images.....38
10.10 Prolong Battery Life.....39

1. Safety Instruction

Read all the safety notes and instructions in the AccuMEMS User Manual for use of the AccuMEMS products. Failure to heed the following instructions can lead to electric shock, fire and/or severe injuries.

1.1 Power Supply

- Voltage Compliance: Input voltage must comply with IEC62368 Limited Power Source specifications (3.85 VDC, 570 mA). Refer to technical specifications for full requirements.
- Manufacturer Standards: Use only adapters from qualified manufacturers. Refer to the product specification for detailed power requirements.
- Connection Requirements: Securely insert plug into power socket until fully engaged.
- DO NOT connect multiple imagers to one power adapter, to avoid over-heating or fire hazards caused by overload.

1.2 Battery

- Warning: Explosion Hazard
- Confirm there is no flammable material within 2 m of the charger during charging.
- Prohibited Disposal Methods
  - DO NOT dispose in fire or high-temperature ovens.
  - DO NOT mechanically crush or cut the battery.
  - DO NOT expose the battery in an extremely high temperature environment, which may result in an explosion or the leakage of flammable liquid or gas.

- DO NOT subject the battery to extremely low air pressure, which may result in an explosion or the leakage of flammable liquid or gas.
- DO NOT place the battery near heating or fire source. Avoid direct sunlight.
- DO NOT swallow the battery to avoid chemical burns.
- DO NOT place the battery in the reach of children.

- Mandatory Disposal: Follow battery manufacturer's recycling instructions precisely.
- Integrated Battery Maintenance
  - The built-in battery cannot be dismantled. Please contact the manufacture for repair if necessary.
  - For long-term storage: Maintain full charge every 90 days. Otherwise, damage may occur.
  - Before using the imager after storage, turn off the imager and charge it for at least 30 minutes.

1.3 Using Environment

- Running Environment Requirement of the Imager:
  - The operating temperature shall be -10 °C to 50 °C (14 °F to 122 °F), and the operating humidity shall be 95% or less.
  - Place the imager in a dry and well-ventilated environment.
  - The level of protection is IP 54.
- Prohibitions:
  - DO NOT expose the imager to high electromagnetic radiation or dusty environments.
  - DO NOT aim the lens at the sun or any other bright light.
  - The imager is suitable for indoor use only.

1.4 Transportation

- Packaging Requirements: Transport the imager exclusively in its original packaging or equivalent protective materials. Retain all packaging components after unboxing for potential reuse
- Return & Liability Conditions: In the event of imager failure requiring factory return: utilize original packaging or equivalent packaging for transportation. Transportation without original packaging may cause damage, and the manufacturer assumes no liability for damages occurring under such circumstances.
- Operational Prohibitions: DO NOT drop the product or subject it to physical shock. Keep the imager away from magnetic interference.

1.5 Maintenance

- DO NOT maintain the imager when it is powered on, or it may cause electric shock!
- If the product does not work properly, please contact your dealer or the nearest service center. We shall not assume any responsibility for problems caused by unauthorized repair or maintenance.
- Wipe the imager gently with a clean cloth and a small quantity of ethanol, if necessary.
- If the equipment is used in a manner not specified by the manufacturer, the protection provided by the device may be impaired.

1.6 Emergency

Upon detecting smoke, abnormal odors, or noise originating from the imager:

- immediately cut all power sources
- unplug the power cable
- notify authorized service center

1.7 White Supplement Light

- The light beam at 200 mm distance is classified as Risk Group 1 (RG1).
- Use proper eye protection or keep the white light off during imager assembly, installation, or maintenance.
- Without adequate shielding or eye protection, activate the light only at a safe distance (1.3 m) or in areas not directly exposed to the beam during setup or servicing.

1.8 Laws and Regulations

Use of the product must be in strict compliance with the local electrical safety regulations.

1.9 Recycling

Please follow local recycling requirements for proper disposal.

2. Product Appearance

NOTE

Imager models may differ in appearance and componentry. Always refer to your imager.

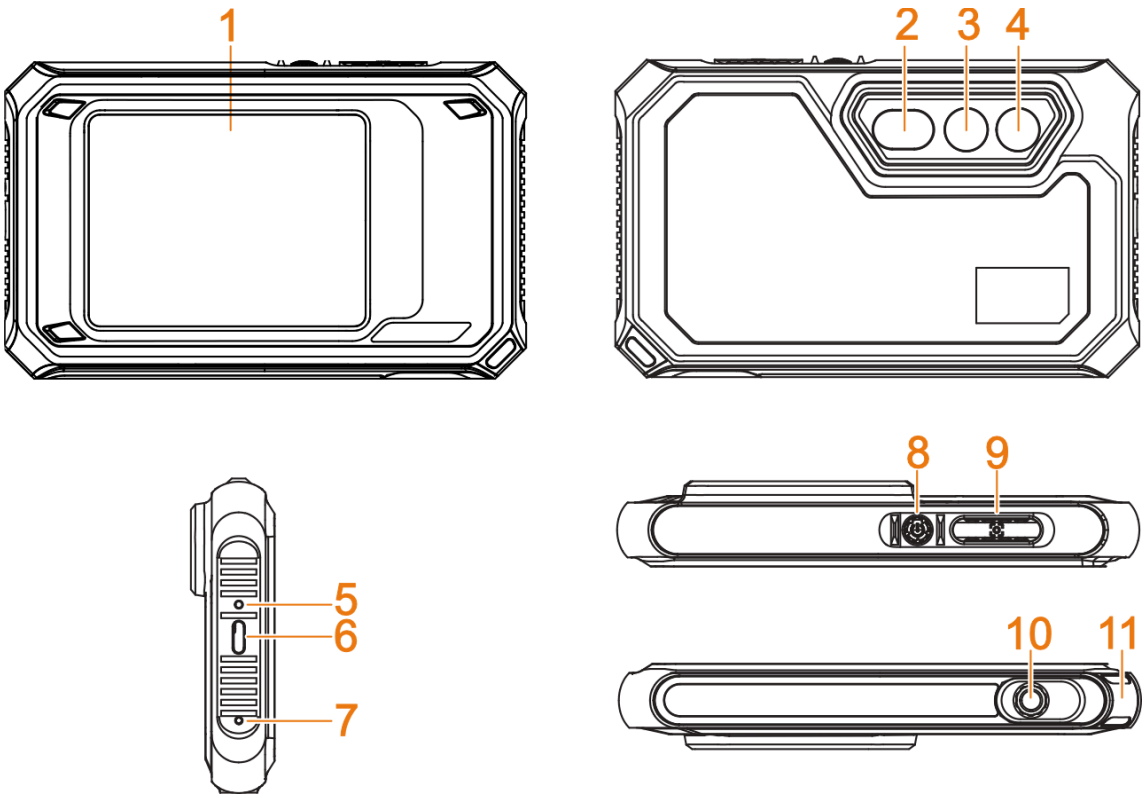

No.	Component	Function
1	Touch Screen	View images and operate the imager via touch control.
2	Flashlight	● Provides fill light for objects. ● Emits a flashing alarm signal.

3	Thermal Lens	View the thermal image.
4	Visual Lens	View the visual image.
5	Indicator of the Charger	● Solid Red: Charging in progress. ● Solid Green: Fully charged.
6	Type-C Interface	Battery charging and data export.
7	Microphone	Records audio.
8	Power Button	Hold: Turn the imager on/off.
9	Capture Button	In Real-time Interface: ● Press: Capture a snapshot. ● Hold: Start recording a video; press again to stop. In Menu Interface: Press: Back to real-time interface.
10	Tripod Mount	Mount the imager on a tripod.
11	Strap Mount	Attach a wrist strap here.

3. Getting Started

3.1 Charging for the Imager

User should prepare a power adapter to charge the imager. The adapter (not included) should meet the following requirements:

- Output Voltage/Current: 5 VDC/2 A
- Minimum Power Output: 10 W

1. Open the Type-C interface protective cover.
2. Insert the included USB cable into the port, and connect the imager to a power source via the power adapter for charging.

NOTE

- **The power delivered by the charger must be between min 8 Watts required by the radio equipment, and max 10 Watts in order to achieve the maximum charging speed.**
- **It is advised to use the USB cable that came with your imager for charging and file transfers.**
- **It is advised to charge the imager for at least half an hour before turning it on if it has been over-discharged from prolonged inactivity.**

3.2 Power On/Off the Imager

Power On

To activate the imager, hold ⏻ for more than 3 seconds. When the imager's interface is steady, you can see the target.

NOTE

After turning the imager on, it can take at least 6 seconds before it is ready for use.

Power Off

When powered on, hold ⏻ for more than 3 seconds to turn off the imager.

Auto Power-Off Configuration

To configure the imager's automatic shutdown time as needed, go to ⚙→More Config→Auto Power-off.

3.3 Menus and Controls

The imager features a touch-control screen, allowing for all controls via simple screen taps.

Real-Time Menu

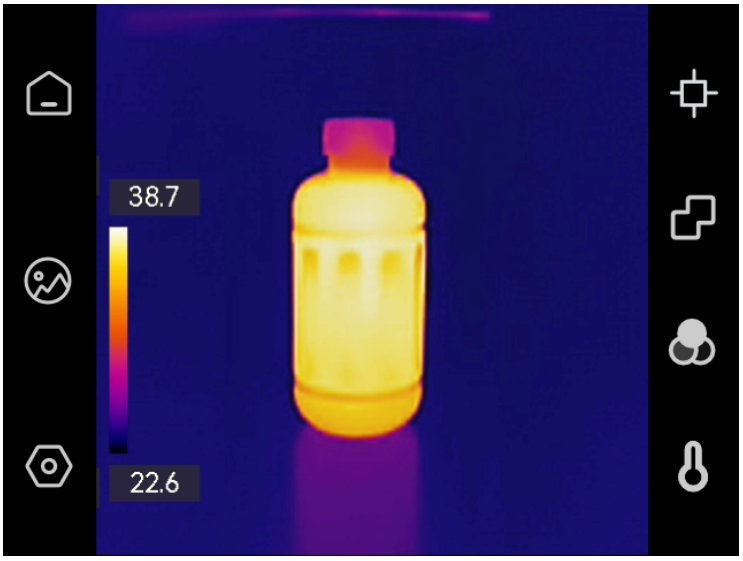

Icon	Description
	Tap to exit the current interface and return to the real-time interface.
	Access captured images and videos.

	Configure local imager preferences and basic operations.
	Enable or disable measurement functions.
	Switch between thermal, visual, fusion, and other display modes.
	Change the thermal image color palettes.
	Adjust level & span for thermal image display. Refer to **6.4 Level & Span** .

Swipe-down Menu

On the real-time interface, swipe down from the top to open the swipe-down menu. You can turn imager functions on or off, switch display themes, and adjust screen brightness etc.

Icon	Description
	Turn the flashlight on or off.
	Switch between day and night themes.
	Adjust the screen brightness.
	Turn on/off hotspot.

NOTE

- By connecting the imager to the APP via hotspot, users can view the real-time interface, capture snapshots, record videos, and transfer files.
- As this manual is updated regularly, the interfaces may differ slightly from your specific model. Always refer to your imager.

4. Usage Scene Configuration

To facilitate rapid anomaly detection, **Usage Scene** offers a range of preset templates designed for different situations.

1. Choose a suitable scene or create a customized one according to detection targets. Refer to **4.1 Choose a Usage Scene** for detailed instructions.
2. Configure measurement tools to monitor real-time temperatures at the highest, lowest, or center points. Refer to **5.1 Measurement Tools Configuration** for detailed instructions.
3. (Optional) Adjust scene parameters. Refer to **4.2 (Optional) Configure Usage Scene Parameters** for detailed instructions.
4. (Optional) Configure alarms as needed. Refer to **5.3 Alarm Configuration** for detailed instructions.
5. See detection results in the real-time interface.

4.1 Choose a Usage Scene

In real-time interface, go to ⚙→**Usage Scene** to choose a desired scene.

Moisture Detect

This scene is used to detect water leaks on indoor building ceilings, walls, and floors.

UIRA-Scene technology enables rapid identification of irregularities during leak inspections. Upon enabling this function, if moisture irregularities are detected, the system will mark them with "Suspect" indicators and red frames in the real-time interface.

NOTE

- **If the temperature difference in areas with moisture irregularities is too subtle to be detected, missed or incorrect reporting may occur.**

- A secondary diagnosis using the UIRA-Scene function is recommended. The algorithm for this function is currently being updated.
- Simultaneously enabling UIRA-IR and UIRA-Scene reduces the frame rate.
- To use the alarm function of this scene, go to ⚙→Alarm Trigger. For details, refer to **5.3 Alarm Configuration**.
- The picture is for reference only. Always refer to your imager.

Home Insulation

This scene is used to detect home insulation irregularities of indoor building structures such as walls and ceilings, common users can apply this scene.

UIRA-Scene technology enables rapid identification of irregularities during insulation inspections. Upon enabling this function, if insulation irregularities are detected, the system will mark them with "Suspect" indicators and red frames in the real-time interface. If air leak points are detected, the system will mark them with "Suspect Air Leak" indicators and red frames in the real-time interface.

NOTE

- If the temperature difference in areas with insulation irregularities is too subtle to be detected, missed or incorrect reporting may occur.
- A secondary diagnosis using the UIRA-Scene function is recommended. The algorithm for this function is currently being updated.
- Simultaneously enabling UIRA-IR and UIRA-Scene reduces the frame rate.
- To use the alarm function of this scene, go to ⚙→Alarm Trigger. For details, refer to **5.3 Alarm Configuration**.
- The picture is for reference only. Always refer to your imager.

Floor Heating

This scene is used to detect and monitoring faults in underfloor heating systems.

UIRA-Scene technology enables rapid identification of irregularities during floor heating inspections. Upon enabling this function, if heat irregularities are detected, the system will mark them with "Suspect" indicators and red frames in the real-time interface.

NOTE

- If the temperature difference in areas with heat irregularities is too subtle to be detected, missed or incorrect reporting may occur.
- A secondary diagnosis using the UIRA-Scene function is recommended. The algorithm for this function is currently being updated.
- Simultaneously enabling UIRA-IR and UIRA-Scene reduces the frame rate.
- To use the alarm function of this scene, go to ⚙→Alarm Trigger. For details, refer to **5.3 Alarm Configuration**.
- The picture is for reference only. Always refer to your imager.

Electrical Failure

Used for detecting and monitoring faults in wires, circuits, electrical components, terminators, and similar items.

Solar Panel

Used for detecting and monitoring faults in solar panels.

Custom

Allows users to create a personalized mode by saving preferred temperature measurement parameters for later use. Refer to **4.2 (Optional) Configure Usage Scene Parameters** for detailed instructions.

4.2 (Optional) Configure Usage Scene Parameters

Users can adjust related parameters in ⚙ → **Usage Scene** to achieve more precise detection results.

NOTE

Parameters vary depending on the selected scene.

Parameters	Description
Distance	Configure the distance between the imager and the target object.
Emissivity	Configure the emissivity value according to the target object.
Emissivity	Set the emissivity value according to the target object.
Distance	Configure the distance between the imager and the target object.
Palettes	Palettes represent temperature using different colors. Users can select a preferred color palette.
Level & Span	The temperature scale on the left helps visualize the color-temperature relationship in the image. Refer to **6.4 Level & Span** for detailed instructions.

Temperature Range	Select the temperature measurement range. In **Auto Switch** mode, the imager automatically detects temperature and switches ranges accordingly.
Alarm Config	When the target temperature triggers a configured alarm rule, users can be notified through configured rules. Refer to **5.3 Alarm Configuration** for detailed instructions.
Color Display	Choose between **Histogram** and **Linear** modes for different scenarios to enhance detail visibility: ● **Histogram**: Enhances visibility of small low-temperature targets in high-temperature areas. ● **Linear**: Optimized for detecting small high-temperature targets against a low-temperature background.

5. Temperature Measurement

To get more precise and real-time temperature of the target, user can set spot tools and alarms as needed.

1. For imagers with **Usage Scene**, choose an appropriate scene to streamline measurement configurations. Refer to **4.2 (Optional) Configure Usage Scene Parameters** for detailed instructions.
2. Configure measurement tools to monitor real-time temperatures at the highest, lowest, or center points. Refer to **5.1 Measurement Tools Configuration** for detailed instructions.
3. Check temperature values displayed in the real-time interface's top-left corner. Configure temperature measurement parameters if accuracy is insufficient. Refer to **5.2 Temperature Accuracy Parameters Configuration** for detailed instructions.
4. (Optional) Enable alarms. Refer to **5.3 Alarm Configuration** for detailed instructions.
5. Review temperature results directly in the real-time interface.

5.1 Measurement Tools Configuration

The imager measures the entire scene temperature and can be configured to display center, hot, and cold points.

Set Measurement Tools

1. In real-time interface, tap ⌖.
2. Tap to select temperature measurement tools as required. **Hot**, **Cold**, and **Center** are selectable.

- **Max**: Display the scene's hot point and its max. temperature.
- **Min**: Display the scene's cold point and the min. temperature.
- **Cen**: Display the scene's center point along with the temperature.

3. Tap any place on screen to save and exit.

NOTE

The imager will display the real-time temperature on the upper left corner of real-time interface.

Reset Measurement Tools

To clear all measurement tools, go to ⚙→More Config→Device Initialization→Remove All Measurement Tools.

A confirmation message "**Setting Succeeded**" will appear.

NOTE

The palette is also restored to the default settings.

5.2 Temperature Accuracy Parameters Configuration

To increase temperature measurement accuracy, you can adjust the measurement parameters.

NOTE

After adjusting the emissivity and distance parameters in the Temp. Settings, the emissivity and distance values in the Usage Scene will also be modified accordingly.

Emissivity:

Configure the target's emissivity. Emissivity is a parameter that measures the thermal radiation capability of an object's surface, indicating the efficiency with which the object emits energy outward.

1. In real-time interface, go to ⚙→ **Temp. Settings**.
2. Choose a preset value or customize it.
3. Tap < to save and exit.

Distance:

Configure the distance between the target and the imager.

- For templates based on approximate camera-to-target distance, use **Near/Middle/Far** modes.
- For precise customization, choose **Custom** mode.

1. In real-time interface, go to ⚙ → **Temp. Settings** → **Distance**.
2. Choose a distance mode.
3. Tap < to save and exit.

NOTE

In real-time interface, scroll the distance wheel to quickly adjust the temperature measurement distance.

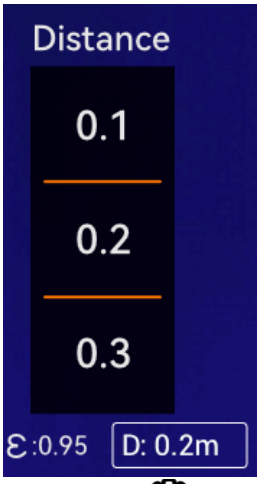

In real-time interface, you can go to ⚙ → **Temp. Settings** to set other parameters.

Other Parameters:

Parameters	Description
Refl. Temp.	Set the **Refl. Temp.** to match interfering high-temperature objects when measuring low-emissivity targets to avoid reflection errors.

Humidity	Configure the ambient humidity.

5.3 Alarm Configuration

Configure the alarm rule and the imager will alarm when the detected temperature triggers the rule.

NOTE

- **Before using alarm trigger, please first turn on Alarm in Usage Scene. Otherwise, alarm trigger will not be visible in the settings interface.**
- **Only some scenes support the alarm function.**

1. In real-time interface, go to ⚙→ **Usage Scene** to select a scene.
2. In **Usage Scene** setting interface, tap **Alarm Config**.
3. Enable **Temperature Alarm** button.
4. Set the alarm rule. Select **More Than** or **Less Than** as needed.
5. Tap **Alarm Threshold** to set the temperature limits by scrolling the wheel.
6. Tap < to save and exit.

NOTE

The temperature value displayed in the top-left corner of the real-time interface changes color based on threshold alerts: red when exceeding the upper limit, blue when falling below the lower limit.

7. (Optional) Tap ⚙→**Alarm Trigger** to set flashing alarms.

6. Display Configuration

6.1 Brightness Configuration

- Go to ⚙→**Display Config**→**Screen Brightness** to adjust the screen brightness.
- Or open the swipe-down menu, tap ☀, and adjust the slider to change the brightness.

6.2 UIRA-IR Configuration

UIRA-IR is an advanced technology, improving object edges for clearer image quality in both real-time viewing (for some models) and captured pictures. Actual performance may vary by model.

- **Real-time View**: When **UIRA-IR** is enabled, supported models enhance object contours during real-time viewing.
- **Pictures**: **UIRA-IR** sharpens object outlines in captured images after activation.

NOTE

- **UIRA-IR is only supported by certain models. Always refer to your imager.**
- **UIRA-IR is enabled by default. To disable it, go to ⚙→UIRA-IR to turn it off.**

6.3 Image Mode Configuration

You can configure the imager's thermal/visual display mode. The selectable options include **Thermal**, **Fusion**, **PIP**, **Blending**, and **Visual modes**.

1. Tap ⧉.
2. Tap the icons to select an image mode.

Mode	Description
Thermal	The imager presents the thermal imaging view.
Fusion	The imager shows thermal images with visual outlines. This function is only supported by models equipped with a visual lens.
PIP	The imager shows the thermal image within the visual image.
Blending	The imager merges thermal and visual image. The balance between thermal and visual elements can be adjusted.
Visual	Visual image only.

3. Tap screen to exit.

6.4 Level & Span Configuration

Adjust the level & span parameters to get better image contrast.

1. Choose a suitable palette:

- Tap in real-time interface.
- Or go to →Usage Scene→Palettes.

2. Configure **Level & Span**:

- Tap in real-time interface.
- Or go to →Usage Scene→Level & Span.

3. Choose **Auto** adjustment or **Manual** adjustment .

Mode	Steps

Auto	Enabling **Auto** mode can automatically adjust the display temperature range.
Manual	1. Tap an area of interest on the screen. A circle will appear around the area, and the display temperature range will adjust to show maximum detail of that area. 2. Tap the maximum or minimum temperature scale values to lock or unlock them. Scroll the wheel to adjust any unlocked values. 3. Alternatively, unlock both the maximum and minimum temperatures. Scroll the wheel to increase or decrease either value individually while preserving the same temperature range. 4. Tap **Persist Saved** or **Temp Saved** at the bottom of the screen. ● **Persist Saved**: The current manual mode settings will be saved and restored after the imager restarts. ● **Temp Saved**: The settings will not be saved upon restart, and the imager will revert to automatic mode.

6.5 On-Screen Info Configuration

Go to ⚙→**Display Config** to turn on/off the information on-screen display.

- **Time and Date**: Device time and date.
- **Parameters**: Temperature measurement parameters.
- **Temperature Scale**: Display the palettes bar and temperature range on the right side of the screen.

7. Pictures and Videos

NOTE

- You cannot capture pictures or recording videos when the menu is shown.
- You cannot capture pictures or recording videos when the imager is connected with PC.
- Go to ⚙→**More Config**→**Device Initialization** to prepare storage as needed.

7.1 Capture Pictures

In the real-time interface, you can press to capture pictures.

NOTE

If the environment is dark when capturing a visual picture, you can turn on the flashlight for illumination.

In the real-time interface, you can go to ⚙→ **Capture Config** to set following parameters.

Parameters	Description
Save Visual Image	To save visual images independently, you can enable **Save Visual Image.**
Capture Mode	● **One Picture**: Press once to capture one picture. ● **Capture Plan**: Configure **Interval** (the time gap between each picture to be taken) and **Number** (the number of pictures to be captured in sequence, from 1 to 10,000) for scheduled capture. Press in real-time

	interface, and the imager captures the specified number of pictures according to the configured interval. Press again to stop capturing.
Filename Header	Define file naming conventions. Default naming uses **Filename Header** + **Time Stamp**. ● Filename header is customizable. ● Time stamp reflects the imager's system time at capture.
File Naming	Files can be named using **Time Stamp** or **Numbering**.

NOTE

- **One Capture** mode freezes the real-time interface and saves to the default album.
- **Capture Plan** mode shows a counter in the real-time interface indicating completed captures.

7.2 Record Videos

NOTE

If the environment is dark when recording videos, you can turn on the flashlight for illumination.

1. (Optional) In real-time interface, go to → **Capture Config**→**Record Audio** to enable or disable audio during video recording.
2. In real-time interface, hold to begin recording. When the recording icon and time display in the interface, recording begins.
3. Press completes the recording. The imager will display a pop-up notification saying "Recording Succeeded". The recording video will be saved.

7.3 View Pictures and Videos

1. Tap to enter **Pictures**.
2. Tap the album, and choose the picture or video.
3. View the selected file and associated information.

NOTE

Files are organized chronologically, with the newest appearing at the top. Should you be unable to locate recently captured snapshots or videos, verify your imager's time and date settings. Refer to 9.1Time and Date Configuration for detailed instructions. While viewing files, switch between files by tapping < or >.

7.4 Manage Files

Task	Operations
Delete a File	1. Tap to enter **Pictures**. 2. Tap the album that contains the file to be deleted. 3. Within the album, tap to view the file to be deleted. 4. Tap the screen to show the menu bar below, then tap . A confirmation dialog will appear. 5. Tap **OK** to delete the file.
Delete Multiple File	1. Tap to enter **Pictures**. 2. Tap the album that contains the files to be deleted. 3. Within the album, tap , then choose the files to be deleted. 4. Tap . A confirmation dialog will appear.

	5. Tap **OK** to delete the files.
Move a File	1. Tap to enter **Pictures**. 2. Choose the album that contains the file to be moved. 3. Within the album, select to view the file to be moved. 4. Tap the file to display the menu bar below, then choose . The album selection list will appear. 5. Select the target album to move to.
Move Multiple Files	1. Tap to enter **Pictures**. 2. Choose the album that contains the files to be moved. 3. Within the album, tap , then choose the files to be moved. 4. Tap . The album selection list will appear. 5. Select the target album to move to.
Attach Text Note	1. Tap to enter **Pictures**. 2. Choose the album that contains the file to be edited. 3. Within the album, select to view the file to be edited. 4. Tap the screen to show the menu bar below, then select . A soft keyboard will appear. 5. Input the text note. 6. Tap ✓ to complete.

NOTE

After ☑, you can tap ☑/⊟ to select or deselect all files within an album.

7.5 Manage Albums

Recorded image and video files are stored in **Pictures**. You can create new albums, modify album names, change default albums, transfer files between albums, and delete albums.

Task	Operations
Create a New Album	1. Tap to enter **Pictures**. 2. Tap + to create a new album. 3. A soft keyboard will appear for naming the album. 4. Tap ✓ to complete. **NOTE** **The newly created album becomes the default saving album and is displayed at the top of the album list.**
Rename an Album	1. Tap to enter **Pictures**. 2. Choose the album to rename. 3. Tap •••, then choose **Rename**. A soft keyboard will appear for renaming the album. 4. Tap ✓ to complete.
Set Default Saving Album	1. Tap to enter **Pictures**. 2. Choose the album to set as default saving location. 3. Tap •••, then choose **Set as Default Saving Album**. **NOTE**

	The default saving album is displayed at the top of the album list.
Delete an Album	1. Tap to enter **Pictures**. 2. Choose the album to delete. 3. Tap •••, then choose **Delete**. A confirmation dialog will appear. 4. Tap **OK** to delete the album. **NOTE** Deleting an album also removes all files within it. Transfer files to other albums if needed. Refer to **7.4Manage Files** for detailed instructions.

7.6 Export Files

1. Connect the imager to your PC with the included USB cable.
2. Select **USB Drive** mode in the prompt on imager.
3. Open the detected disk, copy and paste the files to PC to view the files.
4. Disconnect the imager from your PC.

NOTE

For the first connection, the driver will be installed automatically.

8. Device Connection

8.1 Connect via Hotspot (If Applicable)

In the real-time interface, go to ⚙→More Config→ **Hotspot** to enable **Hotspot**. Remember download and install the **APP** on your phone before using the function.

1. Turn on the imager hotspot and complete settings.
   - Set the hotspot password.
   - Press ↩ to save and exit.
2. Use the **APP** to scan the hotspot's QR code to add the imager to the app.

9. Maintenance

9.1 Time and Date Configuration

1. Go to ⚙→Device Config→Time and Date.
2. Set the **Date** and **Time**.
3. Tap < to save and exit.

NOTE

Go to ⚙→Display Config→Time and Date to turn on/off time and date display.

9.2 Unit Configuration

Go to ⚙→ Device Config →Unit to set the **Temp.** unit and **Distance** unit.

9.3 View Imager Information

In the real-time interface, go to ⚙→More Config →About to view the detailed information of the imager.

9.4 Format Memory

In the real-time interface, go to ⚙→More Config→Device Initialization→Format Memory to initialize the storage.

NOTE

If files exist, ensure they are backed up before formatting. After storage initialization, all data and files are permanently unrecoverable.

9.5 Logs Configuration

The imager can retain its operational logs for troubleshooting purposes. This function can be enabled/disabled via ⚙→**More Config→Save Logs**.

To export logs:

1. Connect the imager to a PC using the included USB cable.
2. Set the imager's USB mode to **USB Drive**.
3. Access operation logs in the device's root directory.

9.6 Upgrade

Before upgrade, download the upgrade file first. You can get the upgrade file through technical support.

1. Connect the imager to your PC via the included cable, and select **USB Drive** as the USB mode in the prompt on the imager.
2. Copy the upgrade file and replace it to the root directory of the imager.
3. Disconnect the imager from your PC.
4. Reboot the imager and then it will upgrade automatically. The upgrading process will be displayed in the main interface.

NOTE

After the upgrading, the imager automatically reboot. You can view the current version in ⚙→More Config→About.

9.7 Restore Imager Configuration

In the real-time interface, go to ⚙→ **More Config→Device Initialization→Restore Device** to initialize the imager and restore default settings.

10. Guidance for Common Thermal Imaging Operations

The manual provides guidance on common issues for first-time users of imagers. For other questions or updated guidance, please contact technical support.

10.1 Can the UIRA-Scene Algorithm Detect Water Leaks, Insulation Issues or Heat Irregularities with 100% Accuracy?

No, it does not achieve 100% accuracy. The UIRA-Scene algorithm is designed for preliminary screening by analyzing thermal image characteristics in various scenarios, based on clear images captured by users. If an area is marked as "Suspect," we recommend manual verification by professionals. Additionally, keeping your imager's firmware updated ensures access to the latest algorithm enhancements.

10.2 Factors may Interfere with the Detection Results of UIRA-Scene

Different wall materials and surrounding heat sources

- Heat diffusion properties of different wall materials:

Some wall materials exhibit heat diffusion patterns that resemble common wall defects, making it necessary for experienced professionals to conduct further verification.

- Interference from ambient heat sources (e.g., heaters or air conditioning vents):

External heat sources may cause localized temperature increases on wall surfaces, affecting detection accuracy.

10.3 Improve Water Leak Detection Success Rates

Method

1. Adhere to recommended leak area and detection distance guidelines. Ensure the leak area and detection distance match your imager's IR resolution.

For example:

IR Resolution	Distance	Leak Area
96×96	≤ 1m	≥ 10cm×15cm
96×96	≤ 2m	≥ 20cm×30cm
256×192	≤ 2m	≥ 10cm×15cm
256×192	≤ 4m	≥ 20cm×30cm

Check your imager's IR resolution under Specification.

2. Perform multiple inspections and dynamic comparisons:

Relying on a single thermal image may lead to errors. Compare images taken at different times (e.g., day vs. night), under varying temperature conditions, or from different angles. You can also observe the same area dynamically.

10.4 Higher-Quality Image

How to Take Clear Thermal Imaging Pictures?

Principle

Thermal image use colors to show temperature distribution. The

temperature range of the target affects the image effect.

Method

1. When the actual temperature difference of the target in the image is higher than 10 °C (50 °F) or 20 °C (68 °F), the thermal image effect is most obvious, which helps to highlight the subtle temperature difference.
2. When the temperature difference of the target in the image is small, you can manually adjust the temperature range (if applicable) of the whole image to increase the contrast of the target.
3. It is recommended that the distance between the imager and the target should be within 2 meters (about 6.56 feet). Adjust the distance to ensure clear focus, especially for small targets.
4. Select an appropriate palette for the scene to get an image with high contrast.

10.5 Guidance on Using Thermal Imaging for Common Water Leak Detection

Principle

Water has a higher specific heat capacity than building materials, so the temperature change rate of the leaking area is different from that of the surrounding materials. The thermal imager captures this temperature difference to locate the leak point contactlessly.

Tips

1. Best Testing Time Period: Choose sunrise or sunset for testing. At this time, the temperature difference between indoors and outdoors is usually over 10 °C (50 °F), and the solar radiation heat gradient makes the thermal imaging of leak points inside the wall more obvious.

2. Environmental Condition Control: The surface temperature should be tested in dry and sunny weather. Rain and snow will lower the surface temperature and interfere with the infrared signal, which will seriously affect the accuracy of detection.
3. Priority Detection Area: Scan the weak links of building structures such as wall corners, window and door edges, existing cracks, pipe-through wall holes, and connections, which are high-risk areas for structural water leakage and pipe water leakage.
4. Dynamic Verification: Avoiding false alarms caused by single-time capture results. In the periods with significant day and night temperature differences, or after adjusting different angles to capture the same area multiple times. Dynamic verification can be used to exclude false alarms.

NOTE

- **Structural Leakage Test: Spraying water on the wall to simulate wetting, or testing the residual water-stained area immediately after rain, can enhance the temperature difference contrast.**
- **Pipe Leakage Detection: For persistent water leakage, you need to take pictures during periods of water pressure changes (such as before and after peak water usage) and refer to the specific suggestions for pipe leakage detection.**
- **Micro Leakage: if the water leakage is very small and the temperature difference is not obvious, it is recommended to use imagers with higher sensitivity and resolution (such as ≤40 mK thermosensitivity and ≥256 × 192 resolution) to improve detection rate.**

10.6 Detect Water Pipe Leaks

- How to Use Thermal Imaging for Hot Water Pipe Leaks?

Principle

When hot water pipes leak, heat energy will conduct to the surface of buildings, and the leaked area will show as a high-temperature region

(usually in red or highlighted color) on the thermal image, which can help you locate the leakage point.

Tips

1. Time Selection: Select sunrise or sunset time when the environment temperature changes significantly and helps to enhance the temperature difference effect.
2. Pressure Verification: Use the pipe pressure tester to monitor the pressure change. If the pressure continues to decrease after pressurization, it can be preliminarily confirmed that there is a leak.
3. Temperature Difference Enhancement: Ensure the hot water temperature is at least 10°C higher than the room temperature and maintain the flow for 15-30 minutes. Under this condition, a detectable temperature difference can be formed in concrete, wood boards, or gypsum boards with a penetration depth of 3-5cm.
4. Pathway Tracking: System scans along the hot water pipe route, focusing on high-risk parts such as interfaces, valves, and wall-penetrating holes, as well as historical maintenance records.

NOTE

The detection effect is influenced by water temperature (must be 10 °C higher than the indoor temperature), pipe burial depth (concrete or dense materials over 5 cm deep may affect imaging), and contact material (wooden boards or gypsum boards can be detected). This method is applicable to contact heat transfer scenes. When pipes have no physical contact with building structures or when leakage water cannot penetrate to the surface, it will not be possible to detect due to lack of temperature difference contrast.

- How to Use Thermal Imaging for Detecting Leaks in Cold Water Pipes?

Principle

Cold water leakage causes heat conduction to the wall, which results in

a lower temperature than that of the surroundings. The thermal imager captures the temperature difference and displays it as a low-temperature area (usually in blue).

Tips

1. Time Selection: The temperature difference between cold water and indoor temperature is usually small, and it is difficult for the temperature to conduct to the surface. You can select sunrise or sunset for testing, as the natural temperature difference can help enhance the contrast.
2. Pressure Verification: Use a pressurizing imager to monitor the pressure of the pipe. If the pressure continues to drop, it can help confirm that a leak exists.
3. Operation in Winter: After preheating the wall and floor in the heating environment, continuously supply cold water to the cold water pipe to create a significant temperature difference.
4. Operation in Summer: Inject cold water into the cold water pipe during the low-temperature sunrise hours to enhance the test effects by leveraging the temperature difference between the environment and the water.
5. Temperature Difference Strengthening Method: Pour hot water into the cold water pipe and keep it for 15 minutes (refer to the hot water pipe testing tips), which can quickly generate a recognizable temperature difference.

NOTE

The detection effect is influenced by water temperature (must be 10 °C higher than the indoor temperature), pipe burial depth (concrete or dense materials over 5 cm deep may affect imaging), and contact material (wooden boards or gypsum boards can be detected). This method is applicable to contact heat transfer scenes. When pipes have no physical contact with building structures or when leakage water cannot penetrate to the surface, it will not be possible to detect due to lack of temperature difference contrast.

10.7 Can the Thermal Imager Penetrate Walls or Floors?

No. Thermal imagers cannot penetrate walls or floors like X-ray machines. They can only detect heat emitted from the surface of an object. However, in certain cases, the thermal imager can detect anomalies inside walls or floors, such as water pipe leakage or heat loss due to poor insulation. This is because the thermal imager can capture the heat conducted to the surface of the wall or floor. If the pipe has no contact with the wall or ground, the temperature cannot be conducted, and the thermal imager cannot detect it.

10.8 Check a Thermal Imager's Temperature Accuracy

- How to test the accuracy of the imagers?

Tips

1. Pour crushed ice and water into the cup, and turn on the imager.
2. Mix the solution and let it stand for a few minutes.
3. Set the imager's emissivity to 0.95 and adjust the distance.
4. Point the imager at the solution to measure its temperature. To get the best effect, please measure the temperature of water surface and avoid measuring cup wall. The reading should be close to the freezing point (0 °C / 32 °F) and within the precision range.

10.9 Frozen Images

What are the clicking sound and frozen image after imager startup?

This is a normal phenomenon of the thermal imaging imager. To keep the measurement accuracy, the imager will automatically calibrate the environment temperature change. During this process, the screen may stutter and show "Image Calibrating...", and you can also hear a "click" sound from the imager. This phenomenon usually occurs when the

imager is moved quickly or when it is turned on for the first time.

10.10 Prolong Battery Life

How to extend the life of lithium batteries?

Tips

1. Initial Charging: Charge the imager for 3 hours in the off state before first use.
2. Charging Cable: Use the included charging cable or an authenticated one.
3. Power Adapter: For best results, use a standard 5 V/2 A charger.
4. Storage and Reuse: When storing the imager for a long time, charge it to full capacity every 3 months. Before using the imager after storage, turn off the imager and charge it for at least 30 minutes.

REGULATORY INFORMATION

FCC Compliance Statement

Please take attention that changes or modification not expressly approved by the party responsible for compliance could void the user's authority to operate the equipment.

This device complies with Part 15 of the FCC Rules. Operation is subject to the following two conditions:

(1) This device may not cause harmful interference, and

(2) This device must accept any interference received, including interference that may cause undesired operation.

This equipment complies with FCC radiation exposure limits set forth for an uncontrolled environment.

Note: This product has been tested and found to comply with the limits for a Class B digital device, pursuant to Part 15 of the FCC Rules. These limits are designed to provide reasonable protection against harmful interference in a residential installation. This product generates, uses, and can radiate radio frequency energy and, if not installed and used in accordance with the instructions, may cause harmful interference to radio communications. However, there is no guarantee that interference will not occur in a particular installation. If this product does cause harmful interference to radio or television reception, which can be determined by turning the equipment off and on, the user is encouraged to try to correct the interference by one or more of the following measures:

—Reorient or relocate the receiving antenna.

—Increase the separation between the equipment and receiver.

—Connect the equipment into an outlet on a circuit different from that to which the receiver is connected.

—Consult the dealer or an experienced radio/TV technician for help

The highest SAR value reported under this standard during product certification when properly body worn (5mm) is 1.15 Wkg.

AccuMEMS

OFFICE

Hangzhou Accumems Technology Co., Ltd.
www.accumems.com

Office Address

Room 418-1, Building 2, JinxiuLinglongfu,
Xixing Street, Binjiang District,
Hangzhou City, Zhejiang Province

GuidePost **Firmware Upgrade**