Kinghelm®

Shenzhen Jinhangbiao Electronics Co., Ltd.

Product Technical Specification Document

SPECIFICATION

Product Model Part No.:KH3216-A35 Internal Antenna
Customer Confirmation: Approved by: Confirmation Date: Approved Date:

RoHS Compliant Parts

Room C809, Block C, Zhantao Technology Building, No.1079 Minzhi Avenue, Longhua District, Shenzhen Tel: 0755-83040901 Fax: 0755-83040901

Prepared by:	Checked by:	Approved By:
Sample Submission Date: Formed On	Product Version | Document Version (V1.2)	

Kinghelm®

catalogue

Table of contents

Specification Document Version Change History (Version Rejection Record)··· 3

1. Introduction Overview····· 4

2. External dimensions and test board pad dimensions (Dimensions)··· ··· 4～5

3. Test Circuit and Matching Circuit: Evaluation Board and Matching Circuits···5

4. Electrical Properties····· 6

5. Characteristic Curve····· 6

6. Directional Map: Radiation Pattern····· 7～8

7. Allowable error after reliability testing: Post-Reliability Tolerance····· 9

8. Reliability Test (Dependability Test)····· 9～10

9. Reflow soldering temperature – Standard conditions for reflow soldering··· 10

10. Packaging Size: Dimensions and Specifications····· 11

Kinghelm®

Product Specification Document Version Change History

Version History Track Record

Version Number	Change Record Rejigger	Drafted	Approve	Date Date
V1.0	Initial issue	Yao Fuxin	He Junju	2015. 12. 25
V1.1	Change product size tolerance value	Sing Chen	He Junju	2017. 05. 24
V1.2	Amend the content of the reliability test descriptions in sections 8.1 to 8.4	Yao Fuxin	He Junju	2017. 11. 07

Remarks：

1、 When modifying a product's electrical performance specifications, the version number must be updated (e.g., from V1.0 to V2.0, V3.0, etc.).

2、 When changing product testing methods (including reliability test conditions) or usage conditions, update the version number with a series suffix (e.g., V1.0 to V1.1, V1.2, etc.).

1 Overview INTRODUCTION

Jinhangbiao Microwave Multilayer Ceramic Antenna LA Series is designed for compact SMD chip applications in WLAN, WiFi, Bluetooth, PHS, mobile multi-frequency antennas, FM systems, and other scenarios.

kinghelm Microwave Multi-Layer Ceramic Antenna LA series are designed to be used in WLAN、WiFi、Bluetooth、PHS、 Multiple-band Mobile phone antenna, FM, etc and compact size SMD chip design.

2. External Dimensions Dimensions (Unit:

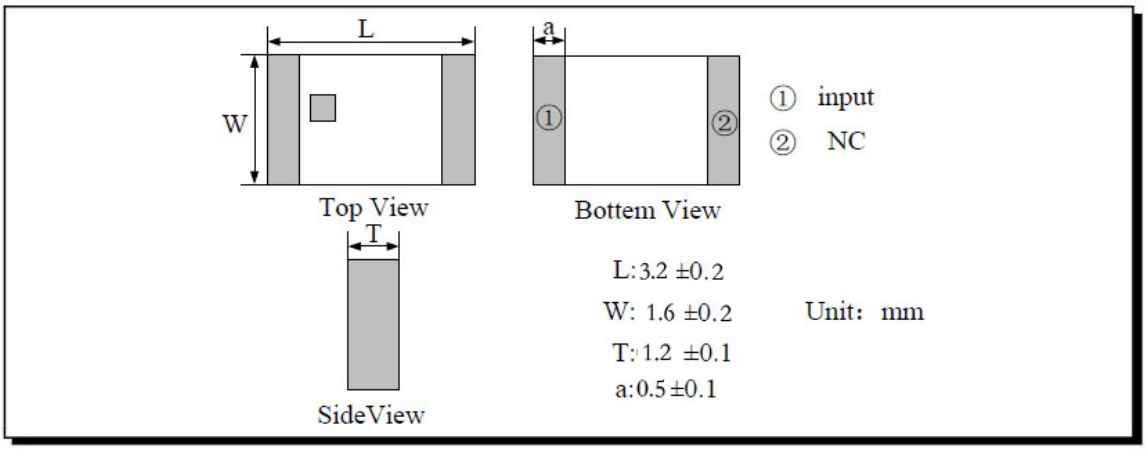

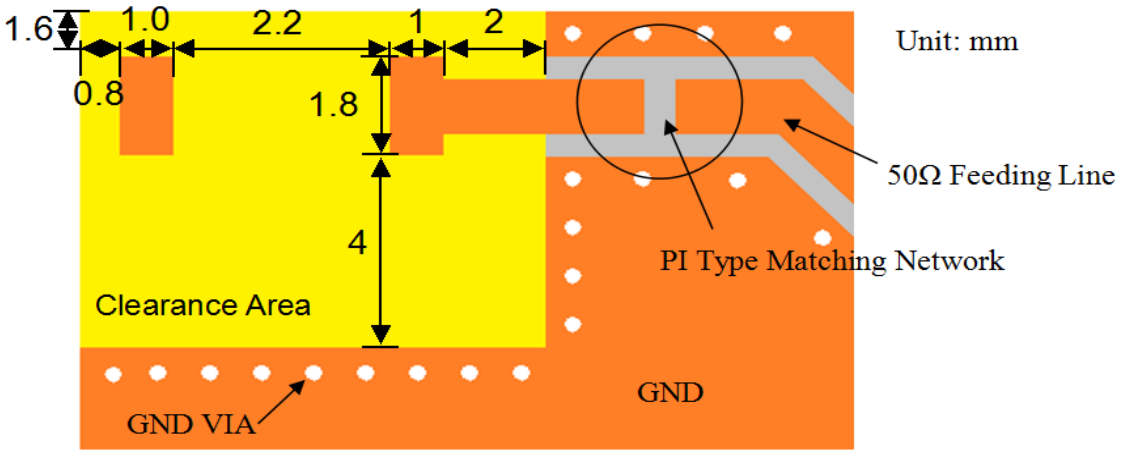

3. Test Circuit and Matching Circuit Evaluation Board and Matching Circuits

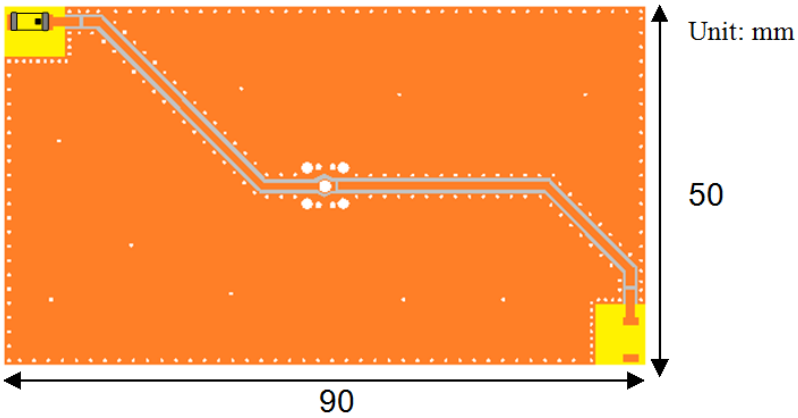

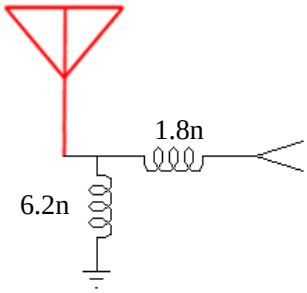

4. Electrical Performance Electrical Characteristics

No.	Item (Project)	Specifications (Characteristics)
4.1	Central Frequency (No match found)	2875MHz
	(With matching circuit test) After Matching	2450 MHz
4.2	Band Width: Passband width	100MHz typ.
4.3	Peak Gain: Peak gain	5.19 dBi
4.4	V.S.W.R Standing Wave Ratio	≤2.0
4.5	Polarization Method	Linear
4.6	Azimuth Beam Width (azimuth angle)	Omni-directional
4.7	Impedance	50 Ω
4.8	Model Type	Internal Antenna

5. Characteristic Curve

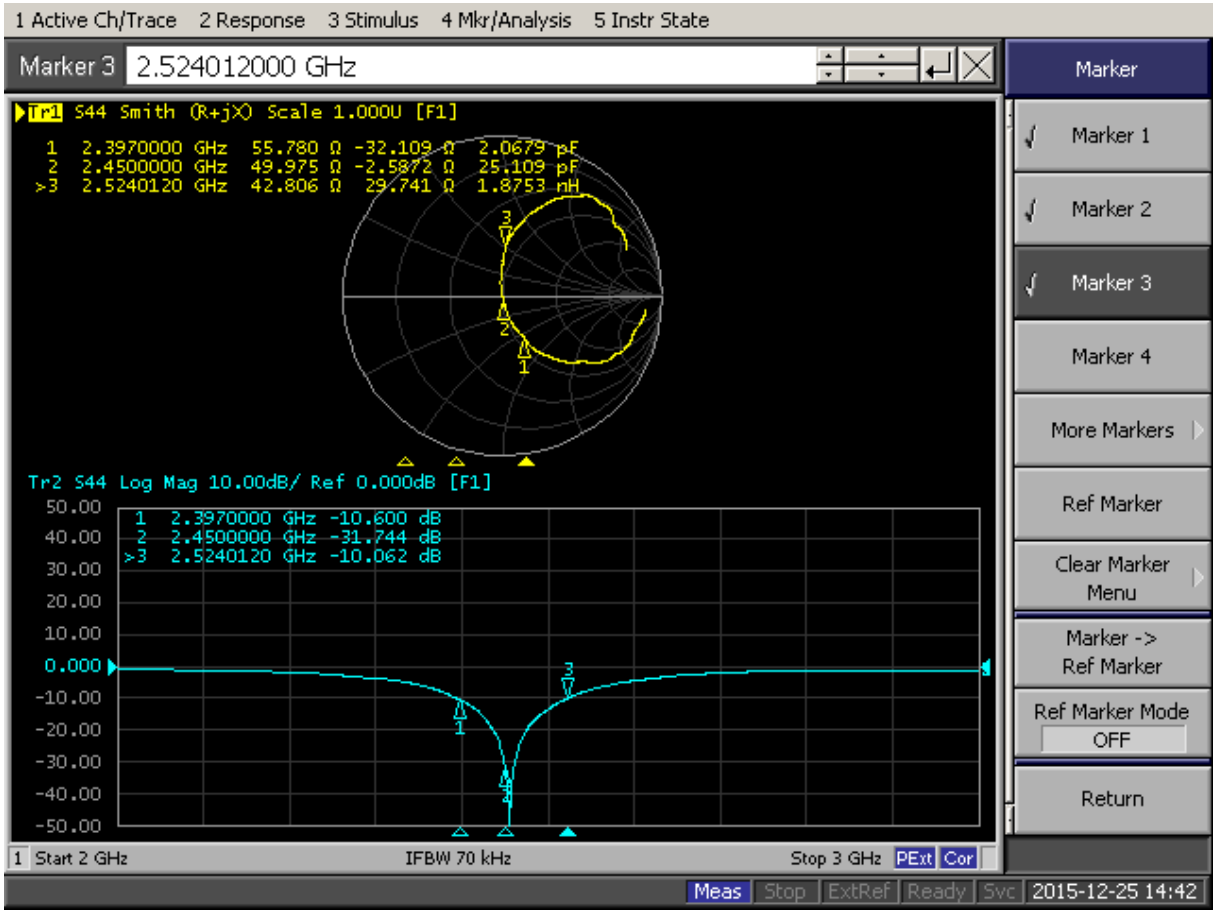

6. Direction Diagram Radiation Pattern

coordinates：

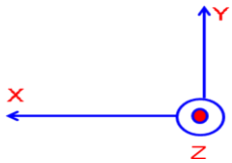

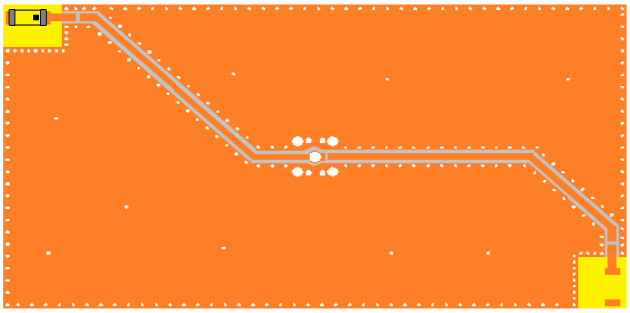

X-Z Plane

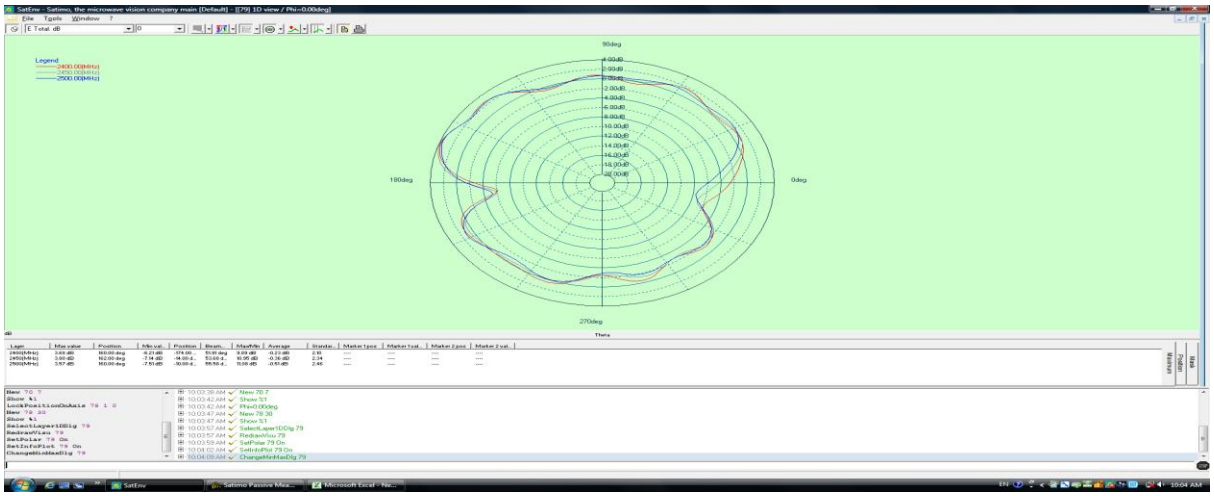

Y-Z Plane

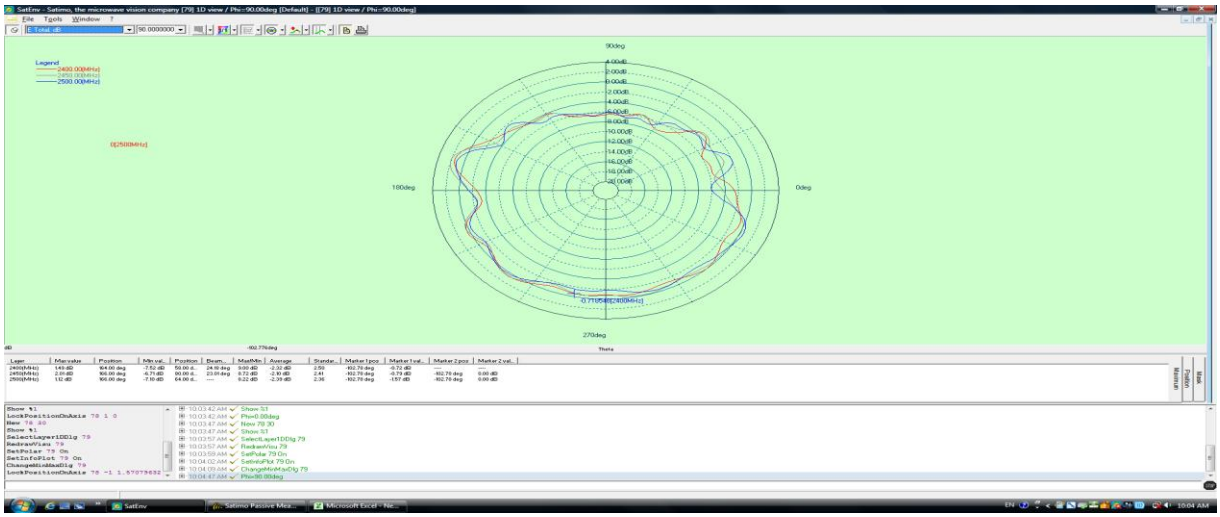

X-Y Plane

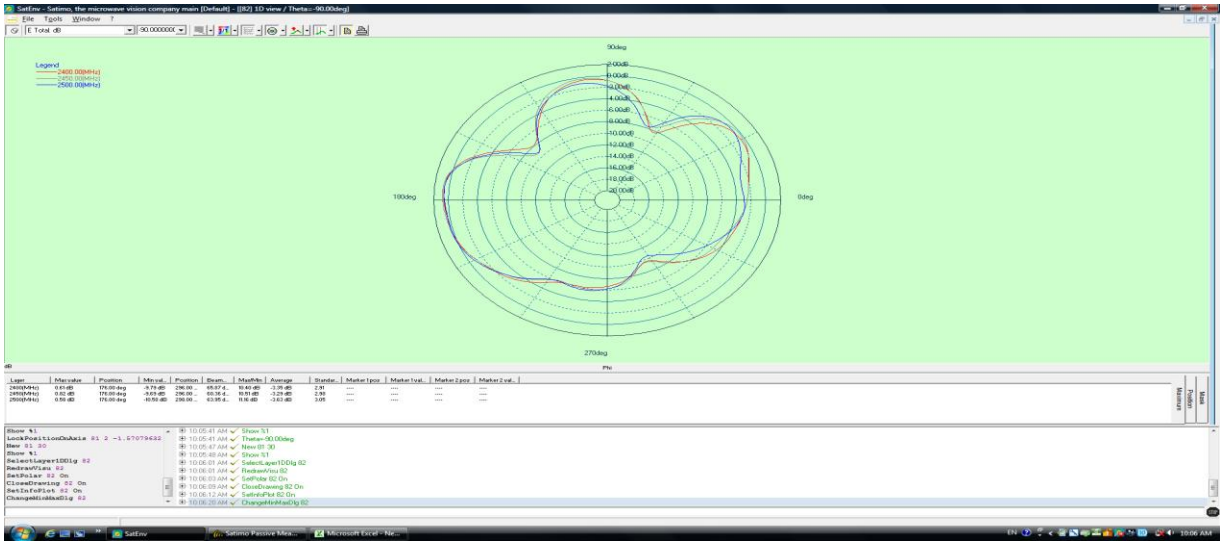

3D Radiation Pattern

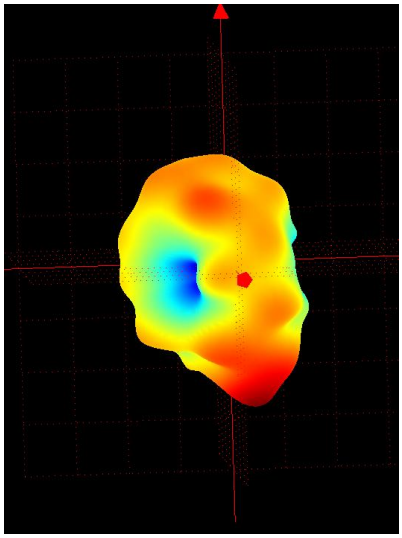

Frequency (MHz)	2400	2450	2500
Avg. Gain (dBi)	-0.23	-0.36	-0.51
Peck Gain (dBi)	4.98	5.19	4.55
Efficiency (%)	70	71.2	69

7. **Allowable error after reliability testing(Post-Reliability Tolerance):**The allowable deviations from the initial reading after reliability testing are shown in the table below

Post Dependability Tolerance (Refer to the table)

No.	Item (Project)	Post-Reliability Tolerance (allowable additional error after reliability testing)
7.1	Central Frequency	±5 MHz
7.2	Band Width: Passband width	±5 MHz
7.3	Gain gain	±0.1 dBi
7.4	V.S.W.R. (in BW): Standing Wave Ratio	±0.1

8. Reliability Test Dependability Test

Base Conditions: Temperature Range 25±5℃

Relative humidity range 55~75%RH

Operating Temperature Range: -40°C to +85°C

8.1 Vibration-Resistant Vibration Resistance

After vibrating along the X, Y, and Z axes for 2 hours each at a frequency of 10–55 Hz with an amplitude of 1.5 mm, the test results comply with the specifications in Tables 8.1–8.4.

The device should satisfy the electrical characteristics specified in paragraph 8.1~8.4 after applied to the vibration of 10 to 55Hz with amplitude of 1.5mm for 2 hours each in X , Y and Z directions.

8.2 Fall and Impact Resistance Drop Shock

After being freely dropped three times onto the wooden floor from a height of 100 cm along the X, Y, and Z axes respectively, the test results comply with the specifications outlined in Tables 8.1–8.4.

The device should satisfy the electrical characteristics specified in paragraph 8.1~8.4 after dropping onto the hard wooden board from the height of 100cm for 3 times each facet of the 3 dimensions of the device.

8.3 Welding Heat-Resistant Solder Heat Proof

The material can withstand preheating at 120–150°C for 120 seconds, followed by solder immersion at 255° C ± 10°C for 5 ± 0.5 seconds or soldering with a soldering iron at 300°C ± 10°C for 3 ± 0.5 seconds without any damage to the weld surface.

The device should be satisfied after preheating at 120℃~150℃ for 120 seconds and dipping in soldering Sn at 255℃+10℃ for 5±0.5 seconds，or electric iron 300℃-10℃ for 3±0.5 seconds，without damnify.

8.4 Bond Strength Test Tensile Strength of Terminal

The product's electrode terminals or surface must withstand a vertical pulling force of 1 kg for 10 ± 1 seconds.

The device should not be broken after tensile force of 1.0kg is slowly applied to pull a lead pin of the fixed device in the lead axis direction for 10±1 seconds.

8.5 Bending Resistance Test

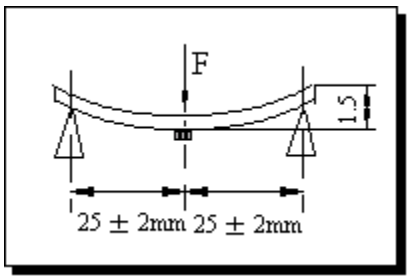

Weld the product onto the center of a 1.6 ± 0.2 mm PCB board as shown in the diagram, applying force in the direction indicated by the arrow at a rate of 1 mm/s for a bending distance of 1.5 mm, holding for 5 ± 1 seconds; the metal layer of the product must remain intact without detachment.

Weld the product to the center part of the PCB with the thickness 1.6±0.2mm as the illustration shows, and keep exerting force arrow-ward on it at speed of :1mm/S , and hold for 5±1S at the position of 1.5mm bending distance , so far , any peeling off of the product metal coating should not be detected .

8.6 Moisture and Heat Resistance Property Moisture Proof

After being stored in a constant temperature and humidity chamber at 60 ± 2°C with relative humidity of 90–95% for 96 hours, the sample was tested after 1–2 hours of recovery at room temperature, meeting the requirements specified in Tables 8.1–8.4.

The device should satisfy the electrical characteristics specified in paragraph 8.1~8.4 after exposed to the temperature 60±2℃and the relative humidity 90~95% RH for 96 hours and 1~2 hours recovery time under normal condition.

8.7 High Temperature Characteristics High Temperature Endurance

Store in a constant temperature incubator at 85±5°C for 96±2 hours, then allow to recover at room temperature for 1–2 hours before testing. Results comply with the specifications outlined in Tables 8.1–8.4.

The device should satisfy the electrical characteristics specified in paragraph 8.1~8.4 after exposed to temperature 85±5℃for 96±2 hours and 1~2 hours recovery time under normal temperature.

8.8 Low Temperature Characteristics Low Temperature Endurance

After storage in a low-temperature chamber at-40°C ± 5°C for 96 ± 2 hours, the product exhibited recovery within 1–2 hours, and testing results complied with the specifications outlined in Tables 8.1–8.4.

The device should also satisfy the electrical characteristics specified in paragraph 8.1~8.4 after exposed to the temperature -40℃±5℃ for 96±2 hours and to 2 hours recovery time under normal temperature.

8.9 Temperature Cycle Temperature Cycle Test

After maintaining the sample at-40°C for 30 minutes followed by 30 minutes at +85°C, repeating this cycle five times, the sample was then allowed to recover at room temperature for 1–2 hours before testing; the results complied with the specifications outlined in Tables 8.1–8.4.

The device should also satisfy the electrical characteristics specified in paragraph 8.1~8.4 after exposed to the low temperature -40℃ and high temperature +85℃ for 30±2 min each by 5 cycles and 1 to 2 hours recovery time under normal temperature.

9. Reflow Soldering Temperature Standard Condition for Reflow Soldering

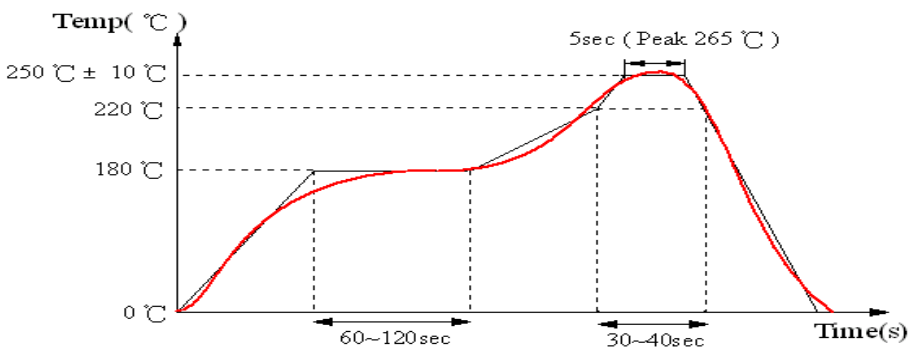

10 Packaging Size (3216)Packaging and Dimensions

10.1 Plastic Tape

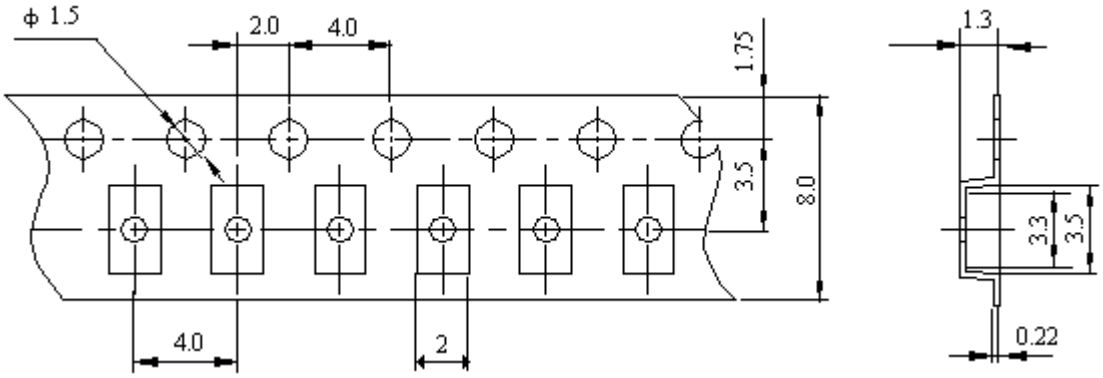

Package Instructions: Remarks for Package

The hole length at the rear end of the carrier should be 150–200 mm, while that at the front end should be 250–300 mm; the cover tape on the front section must be extended by an additional 250 mm. Specifically, reserve 150–200 mm for the carrier's trailer section, 250–300 mm for its lead section, and an extra 250 mm of cover tape at the front end of the carrier.

10.2 Reel（3000 pcs/Reel）

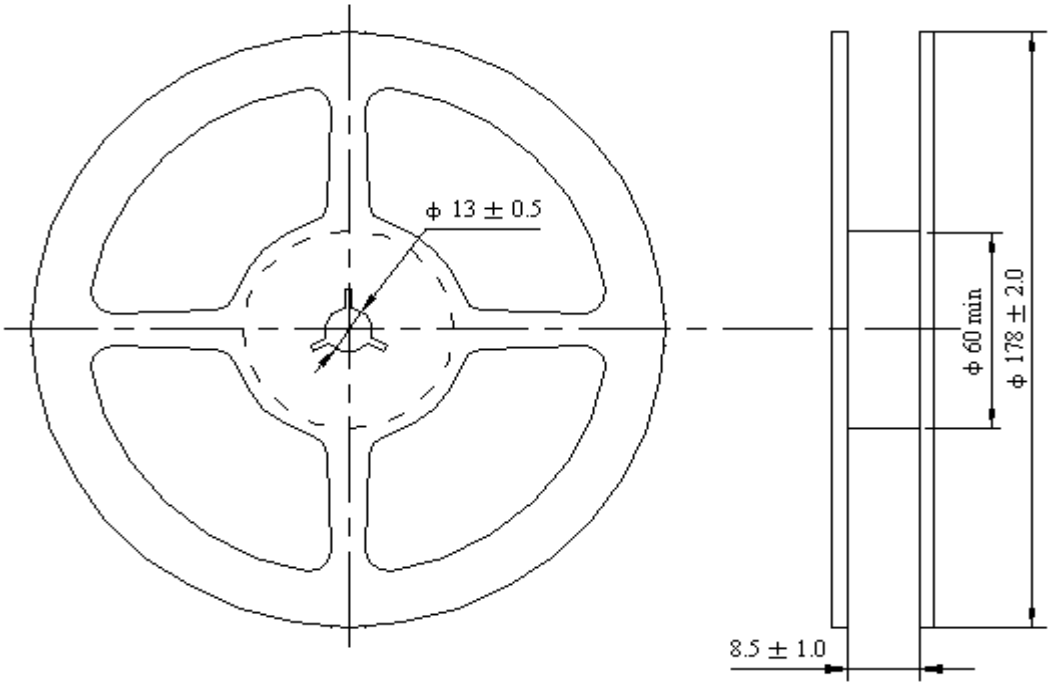

10.3 Storage Conditions | Storage Period

Oxidizable product; store under vacuum for up to one year. After opening, use within 168 hours or reseal the packaging immediately. Material: Repack within 168 hours by resealing the package after use.

Storage Temperature and Humidity:

Storage Temperature Range : <30 degree C, Humidity : <60%RH