FCC Part 15C Test Report
FCC ID: 2BTRA-LSRGB24V

Applicant:	ZhongShan Longshine Electrical Science & Technology Co.,Ltd.
Address:	5th Floor No 128th LeFeng South Road, Lianfeng Community, XiaoLan Town, Zhongshan City Guang Dong Province, China
Manufacturer:	ZhongShan Longshine Electrical Science & Technology Co.,Ltd.
Address:	5th Floor No 128th LeFeng South Road, Lianfeng Community, XiaoLan Town, Zhongshan City Guang Dong Province, China
EUT:	LED RGB Smart decoration light
Trade Mark:	Longshine
Model Number:	LS-RGB-24V-01, LS-RGB-24V-XX, LS-RGB-01-XX, LS-RGB-XX-XX, LS-XX-XX
Date of Receipt:	Dec. 08, 2025
Test Date:	Dec. 08, 2025 - Dec. 16, 2025
Date of Report:	Dec. 16, 2025
Prepared By:	Shenzhen DL Testing Technology Co., Ltd.
Address:	101-201, Comprehensive Building, Tongzhou Electronics Longgang Factory Area, No.1 Baolong Fifth Road, Baolong Community, Baolong Street, Longgang District, Shenzhen, China
Applicable Standards:	FCC PART 15 C 15.249 ANSI C63.10:2020
Test Result:	Pass
Report Number:	DLE-251208008R

Prepared (Test Engineer):	Ken Tan
Reviewer (Supervisor):	Jack Bu
Approved (Manager):	Jade Yang

This test report is based on a single evaluation of one sample of above mentioned products. It is not permitted to be duplicated in extracts without written approval of Shenzhen DL Testing Technology Co., Ltd.

Table of Contents Page

1 . SUMMARY OF TEST RESULTS 4
1.1 MEASUREMENT UNCERTAINTY 4
2 . GENERAL INFORMATION 5
2.1 GENERAL DESCRIPTION OF EUT 5
2.2 DESCRIPTION OF TEST MODES 6
2.3 BLOCK DIGRAM SHOWING THE CONFIGURATION OF SYSTEM TESTED 6
2.4 DESCRIPTION OF SUPPORT UNITS(CONDUCTED MODE) 7
2.5 TABLE OF PARAMETERS OF TEST SOFTWARE SETTING 7
2.6 EQUIPMENTS LIST FOR ALL TEST ITEMS 8
3 . EMC EMISSION TEST 9
3.1 CONDUCTED EMISSION MEASUREMENT 9
3.1.1 POWER LINE CONDUCTED EMISSION LIMITS 9
3.1.2 TEST PROCEDURE 9
3.1.3 DEVIATION FROM TEST STANDARD 9
3.1.4 TEST SETUP 10
3.1.5 EUT OPERATING CONDITIONS 10
3.1.6 TEST RESULTS 10
3.2 RADIATED EMISSION MEASUREMENT 11
3.2.1 RADIATED EMISSION LIMITS 11
3.2.2 TEST PROCEDURE 12
3.2.3 DEVIATION FROM TEST STANDARD 12
3.2.4 TEST SETUP 12
3.2.5 EUT OPERATING CONDITIONS 13
3.2.6 TEST RESULTS (BETWEEN 9KHZ – 30 MHZ) 14
3.2.7 TEST RESULTS (BETWEEN 30MHZ – 1GHZ) 15
3.2.8 TEST RESULTS (1GHZ~25GHZ) 17
3.3 RADIATED BAND EMISSION MEASUREMENT 18
3.3.1 TEST REQUIREMENT: 18
3.3.2 TEST PROCEDURE 18
3.3.3 DEVIATION FROM TEST STANDARD 18
3.3.4 TEST SETUP 19
3.3.5 EUT OPERATING CONDITIONS 19
4 . BANDWIDTH TEST 21
4.1 APPLIED PROCEDURES / LIMIT 21
4.1.1 TEST PROCEDURE 21
4.1.2 DEVIATION FROM STANDARD 21
4.1.3 TEST SETUP 21

Table of Contents **Page**

4.1.4 EUT OPERATION CONDITIONS 21
4.1.5 TEST RESULTS 22
5 . ANTENNA REQUIREMENT 23
5.1 STANDARD REQUIREMENT 23
5.2 EUT ANTENNA 23
6 . TEST SEUUP PHOTO 23
7 . EUT PHOTO 23

1. SUMMARY OF TEST RESULTS

Test procedures according to the technical standards:

FCC Part15 (15.249) , Subpart C			
Standard Section	Test Item	Judgment	Remark
15.207	Conducted Emission	N/A	
15.205(a), 15.209(a) 15.249(a), 15.249(c)	Fundamental &Radiated Spurious Emission Measurement	PASS	
15.249(d)	Band Edge Emission	PASS	
15.215(c)	20dB Bandwidth	PASS	
15.203	Antenna Requirement	PASS	

NOTE:

(1)" N/A" denotes test is not applicable in this Test Report

Test lab: Shenzhen DL Testing Technology Co., Ltd.

Address: 101-201, Comprehensive Building, Tongzhou Electronics Longgang Factory Area, No.1 Baolong Fifth Road, Baolong Community, Baolong Street, Longgang District, Shenzhen, China

The test results presented in this report relate only to the object tested.

This report shall not be reproduced, except in full, without the written approval of the Issuing DL Testing Laboratory. The authenticity of this Test Report and its contents can be verified by contacting the DL Testing, responsible for this Test Report.

FCC Test Firm Registration Number: 854456
Designation Number: CN1307
IC Registered No.: 27485
CAB ID.: CN0118

1.1 MEASUREMENT UNCERTAINTY

The reported uncertainty of measurement **y ± U**, where expended uncertainty **U** is based on a standard uncertainty multiplied by a coverage factor of **k=2**,providing a level of confidence of approximately **95** %.

No.	Item	Uncertainty
1	Conducted Emission Test	±2.56dB
2	RF power,conducted	±0.42dB
3	Spurious emissions,conducted	±2.76dB
4	All emissions,radiated(<1G)	±3.65dB
5	All emissions,radiated(>1G)	±4.89dB
6	Temperature	±0.5°C
7	Humidity	±2%
8	20dB Bandwidth	±0.2MHz

2. GENERAL INFORMATION

2.1 GENERAL DESCRIPTION OF EUT

Product Name:	LED RGB Smart decoration light
Trademark	Longshine
Model No.:	LS-RGB-24V-01, LS-RGB-24V-XX, LS-RGB-01-XX, LS-RGB-XX-XX, LS-XX-XX
Model Difference	All models are the same as the samples, except for the model names and the supporting receiver, they have the same structure and circuit.
Operation Frequency:	2402~2480MHz
Channel numbers:	40 Channels
Channel separation:	2MHz
Modulation technology:	GFSK
Antenna Type:	Internal Antenna
Antenna gain:	0dBi
Power supply:	DC 3V

Note:

1.For a more detailed features description, please refer to the manufacturer's specifications or the User's Manual.

2.The EUT's all information provided by client.

3.

Channel List					
Channel	Frequency (MHz)	Channel	Frequency (MHz)	Channel	Frequency (MHz)
00	2402	14	2430	27	2456
01	2404	15	2432	28	2458
02	2406	16	2434	29	2460
03	2408	17	2436	30	2462
04	2410	18	2438	31	2464
05	2412	19	2440	32	2466
06	2414	20	2442	33	2468
07	2416	21	2444	34	2470
08	2418	22	2446	35	2472
09	2420	23	2448	36	2474
10	2422	24	2450	37	2476
11	2424	25	2452	38	2478
12	2426	26	2454	39	2480
13	2428	/	/	/	/

2.2 DESCRIPTION OF TEST MODES

To investigate the maximum EMI emission characteristics generates from EUT, the test system was pre-scanning tested base on the consideration of following EUT operation mode or test configuration mode which possible have effect on EMI emission level. Each of these EUT operation mode(s) or test configuration mode(s) mentioned above was evaluated respectively.

Pretest Mode	Description	
Mode 1	CH00	GFSK
Mode 2	CH19	
Mode 3	CH39	
Mode 4	Link Mode	

For Radiated Emission		
Final Test Mode	Description	
Mode 1	CH00	GFSK
Mode 2	CH19	
Mode 3	CH39	
Mode 4	Link Mode	

Note:

(1) The measurements are performed at the highest, middle, lowest available channels.

2.3 BLOCK DIGRAM SHOWING THE CONFIGURATION OF SYSTEM TESTED

Radiated Spurious Emission Test

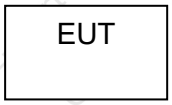

2.4 DESCRIPTION OF SUPPORT UNITS(CONDUCTED MODE)

The EUT has been tested as an independent unit together with other necessary accessories or support units. The following support units or accessories were used to form a representative test configuration during the tests.

Item	Equipment	Model/Type No.	Series No.	Note

Item	Shielded Type	Ferrite Core	Length	Note

Note:

(1) For detachable type I/O cable should be specified the length in cm in『Length』column.

2.5 TABLE OF PARAMETERS OF TEST SOFTWARE SETTING

During testing, channel & power controlling software provided by the customer was used to control the operating channel as well as the output power level. The RF output power selection is for the setting of RF output power expected by the customer and is going to be fixed on the end product.

Test software Version	Test program: RF Test_V1.2		
Frequency	2402 MHz	2440 MHz	2480 MHz
Power Setting of Softwave	10	10	10

2.6 EQUIPMENTS LIST FOR ALL TEST ITEMS

Radiation test, Band-edge test and 20db bandwidth test equipment

Item	Equipment	Manufacturer	Type No.	Serial No.	Last calibration	Calibrated until
1	Spectrum Analyzer (9kHz-26.5GHz)	Agilent	E4408B	MY50140780	Oct. 25, 2025	Oct. 24, 2026
2	Test Receiver (9kHz-7GHz)	R&S	ESRP7	101393	Oct. 25, 2025	Oct. 24, 2026
3	Bilog Antenna (30MHz-1GHz)	R&S	VULB9162	00306	Oct. 25, 2025	Oct. 24, 2026
4	Horn Antenna (1GHz-18GHz)	Schwarzbeck	BBHA9120D	02139	Oct. 26, 2025	Oct. 25, 2026
5	Horn Antenna (18GHz-40GHz)	A.H. Systems	SAS-574	588	Oct. 25, 2025	Oct. 24, 2026
6	Amplifier (9KHz-6GHz)	Schwarzbeck	BBV9743B	00153	Oct. 25, 2025	Oct. 24, 2026
7	Amplifier (1GHz-18GHz)	EMEC	EM01G8GA	00270	Oct. 25, 2025	Oct. 24, 2026
8	Amplifier (18GHz-40GHz)	Quanjuda	DLE-161	97	Oct. 25, 2025	Oct. 24, 2026
9	Loop Antenna (9KHz-30MHz)	Schwarzbeck	FMZB1519B	00014	Oct. 25, 2025	Oct. 24, 2026
10	RF cables1 (9kHz-1GHz)	ChengYu	966	004	Oct. 25, 2025	Oct. 24, 2026
11	RF cables2 (1GHz-40GHz)	ChengYu	966	003	Oct. 25, 2025	Oct. 24, 2026
12	Antenna connector	Florida RF Labs	N/A	RF 01#	Oct. 25, 2025	Oct. 24, 2026
13	Power probe	KEYSIGHT	U2021XA	MY55210018	Oct. 25, 2025	Oct. 24, 2026
14	Signal Analyzer 9kHz-26.5GHz	Agilent	N9020A	MY55370280	Oct. 25, 2025	Oct. 24, 2026
15	Test Receiver 20kHz-40GHz	R&S	ESU 40	100376	Oct. 25, 2025	Oct. 24, 2026
16	D.C. Power Supply	LongWei	PS-305D	010964729	Oct. 25, 2025	Oct. 24, 2026
17	Temperature & humidity chamber	Changfeng	CF-150-40-P	CF170802-01	Oct. 25, 2025	Oct. 24, 2026

Conduction Test equipment

Item	Equipment	Manufacturer	Type No.	Serial No.	Last calibration	Calibrated until
1	843 Shielded Room	YIHENG	843 Room	843	Nov. 05, 2023	Nov. 04, 2026
2	EMI Receiver	R&S	ESR	101421	Oct. 25, 2025	Oct. 24, 2026
3	LISN	R&S	ENV216	102417	Oct. 25, 2025	Oct. 24, 2026
4	843 Cable 1#	ChengYu	CE Cable	001	Oct. 25, 2025	Oct. 24, 2026

Other

Item	Name	Manufacturer	Model	Software version
1	EMC Conduction Test System	FALA	EZ_EMC	EMC-CON 3A1.1
2	EMC radiation test system	FALA	EZ_EMC	FA-03A2
3	RF test system	MAIWEI	MTS8310	2.0.0.0
4	RF communication test system	MAIWEI	MTS8200	2.0.0.0

3. EMC EMISSION TEST

3.1 CONDUCTED EMISSION MEASUREMENT

3.1.1 POWER LINE CONDUCTED EMISSION Limits (Frequency Range 150KHz-30MHz)

FREQUENCY (MHz)	Limit (dBuV)		Standard
	Quasi-peak	Average	
0.15 -0.5	66 - 56 *	56 - 46 *	FCC
0.50 -5.0	56.00	46.00	FCC
5.0 -30.0	60.00	50.00	FCC

Note:

(1) The tighter limit applies at the band edges.

(2) The limit of " * " marked band means the limitation decreases linearly with the logarithm of the frequency in the range.

The following table is the setting of the receiver

Receiver Parameters	Setting
Attenuation	10 dB
Start Frequency	0.15 MHz
Stop Frequency	30 MHz
IF Bandwidth	9 kHz

3.1.2 TEST PROCEDURE

a. The EUT was placed 0.8 meters from the horizontal ground plane with EUT being connected to the power mains through a line impedance stabilization network (LISN). All other support equipments powered from additional LISN(s). The LISN provide 50 Ohm/ 50uH of coupling impedance for the measuring instrument.

b. Interconnecting cables that hang closer than 40 cm to the ground plane shall be folded back and forth in the center forming a bundle 30 to 40 cm long.

c. I/O cables that are not connected to a peripheral shall be bundled in the center. The end of the cable may be terminated, if required, using the correct terminating impedance. The overall length shall not exceed 1 m.

d. LISN at least 80 cm from nearest part of EUT chassis.

e. For the actual test configuration, please refer to the related Item –EUT Test Photos.

3.1.3 DEVIATION FROM TEST STANDARD

No deviation

3.1.4 TEST SETUP

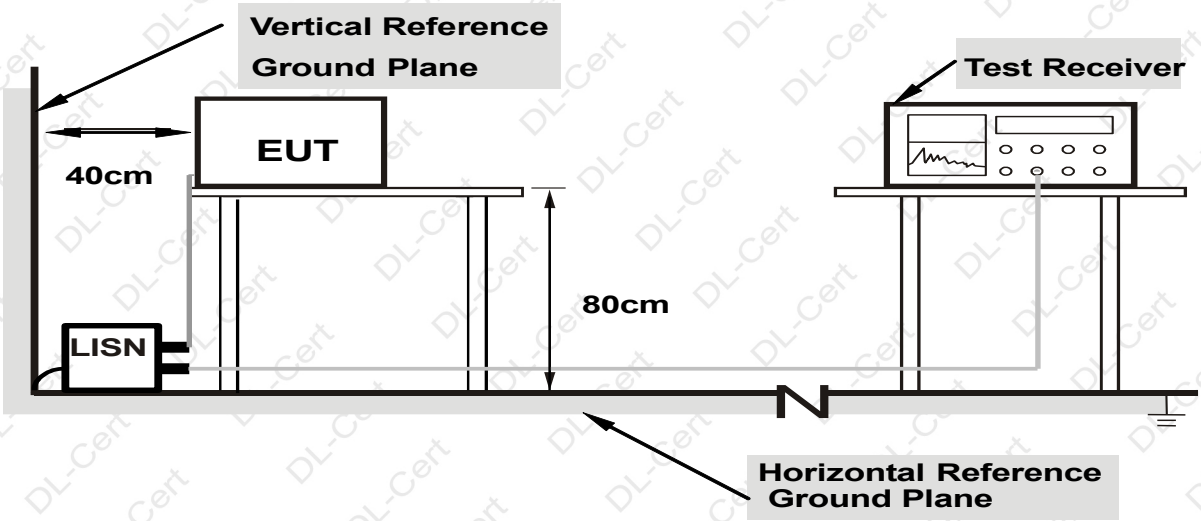

Note: 1.Support units were connected to second LISN.
2.Both of LISNs (AMN) are 80 cm from EUT and at least 80 from other units and other metal planes

3.1.5 EUT OPERATING CONDITIONS

The EUT was configured for testing in a typical fashion (as a customer would normally use it). The EUT has been programmed to continuously transmit during test. This operating condition was tested and used to collect the included data.

3.1.6 TEST RESULTS

The EUT is powered by DC, no requirements for this item.

3.2 RADIATED EMISSION MEASUREMENT

3.2.1 RADIATED EMISSION LIMITS (Frequency Range 9kHz-1000MHz)

In case the emission fall within the restricted band specified on 15.205(a), then the 15.209(a) limit in the table below has to be followed.

Frequency (MHz)	Field Strength (micorvolts/meter)	Measurement Distance (meters)
0.009~0.490	2400/F(KHz)	300
0.490~1.705	24000/F(KHz)	30
1.705~30.0	30	30
30~88	100	3
88~216	150	3
216~960	200	3
Above 960	500	3

The field strength of emissions from intentional radiators operated within these frequency bands shall comply with the following:

Fundamental Frequency	Field Strength of Fundamental (millivolts/meter)	Field Strength of Harmonics (microvolts/meter)
902 - 928 MHz	50	500
2400 - 2483.5 MHz	50	500
5725 - 5875 MHz	50	500
24.0 - 24.25 GHz	250	2500

LIMITS OF RADIATED EMISSION MEASUREMENT (Above 1000MHz)

FREQUENCY (MHz)	Limit (dBuV/m) (at 3M)	
	PEAK	AVERAGE
Above 1000	74	54

Notes:

(1) The limit for radiated test was performed according to FCC PART 15C.

(2) The tighter limit applies at the band edges.

(3) Emission level (dBuV/m)=20log Emission level (uV/m).

(4) Emissions radiated outside of the specified frequency bands, except for harmonics, shall be attenuated by at least 50 dB below the level of the fundamental or to the general radiated emission limits in § 15.209, whichever is the lesser attenuation.

Receiver setup:

Frequency	Detector	RBW	VBW	Value
9KHz-150KHz	Quasi-peak	200Hz	600Hz	Quasi-peak
150KHz-30MHz	Quasi-peak	9KHz	30KHz	Quasi-peak
30MHz-1GHz	Quasi-peak	100KHz	300KHz	Quasi-peak
Above 1GHz	Peak	1MHz	3MHz	Peak

	Peak	1MHz	10Hz	Average

3.2.2 TEST PROCEDURE

Below 1GHz test procedure as below:

a. The EUT was placed on the top of a rotating table 0.8 meters above the ground at a 3 meter semi-anechoic camber. The table was rotated 360 degrees to determine the position of the highest radiation.
b. The EUT was set 3 meters away from the interference-receiving antenna, which was mounted on the top of a variable-height antenna tower.
c. The antenna height is varied from one meter to four meters above the ground to determine the maximum value of the field strength. Both horizontal and vertical polarizations of the antenna are set to make the measurement.
d. For each suspected emission, the EUT was arranged to its worst case and then the antenna was tuned to heights from 1 meter to 4 meters (for the test frequency of below 30MHz, the antenna was tuned to heights 1 meter) and the rotatable table was turned from 0 degrees to 360 degrees to find the maximum reading.
e. The test-receiver system was set to Peak Detect Function and Specified Bandwidth with Maximum Hold Mode.
f. If the emission level of the EUT in peak mode was 10dB lower than the limit specified, then testing could be stopped and the peak values of the EUT would be reported. Otherwise the emissions that did not have 10dB margin would be re-tested one by one using peak, quasi-peak or average method as specified and then reported in a data sheet.

Above 1GHz test procedure as below:

g. The EUT was placed on the top of a rotating table 1.5 meters above the ground at a 3 meter semi-anechoic camber.
h. Test the EUT in the lowest channel ,the middle channel ,the Highest channel

Note:

Both horizontal and vertical antenna polarities were tested
and performed pretest to three orthogonal axis. The worst case emissions were reported

3.2.3 DEVIATION FROM TEST STANDARD

No deviation

3.2.4 TEST SETUP

（A）Radiated Emission Test-Up Frequency Below 30MHz

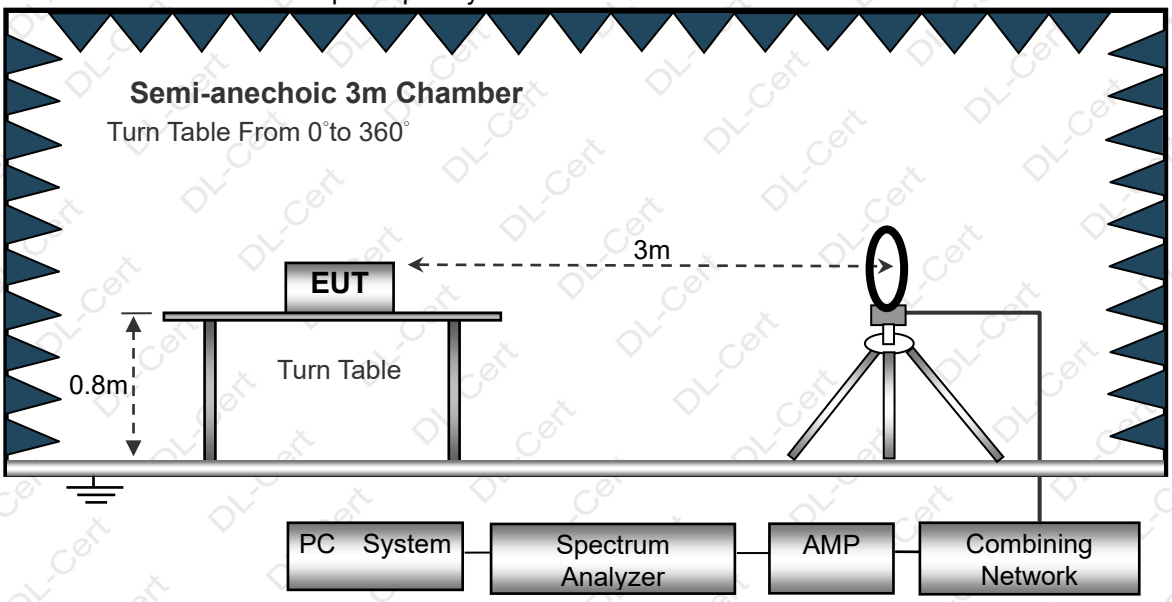

（B）Radiated Emission Test-Up Frequency 30MHz~1GHz

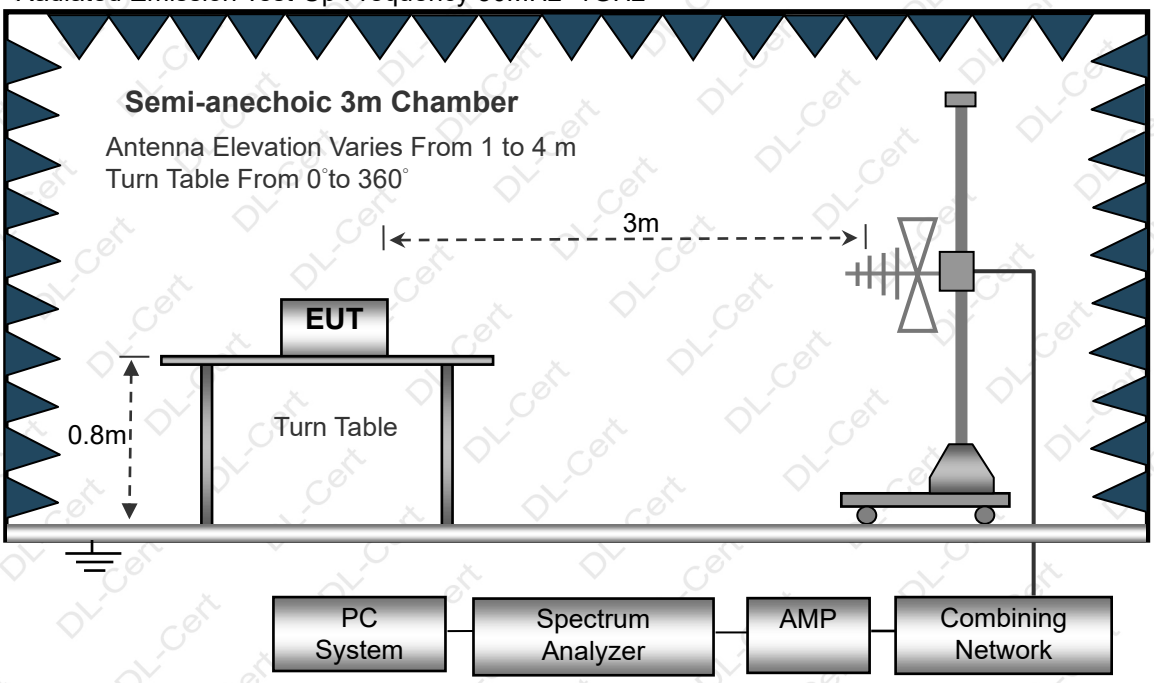

（C）Radiated Emission Test-Up Frequency Above 1GHz

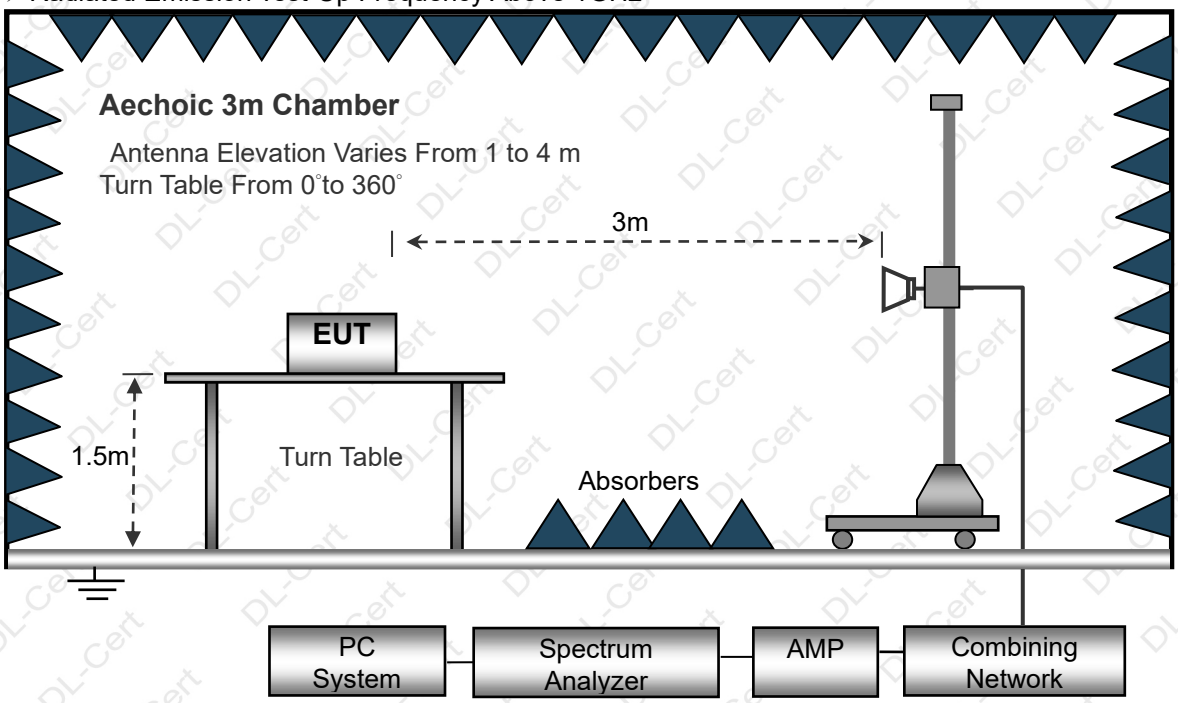

3.2.5 EUT OPERATING CONDITIONS

The EUT tested system was configured as the statements of 2.3 Unless otherwise a special operating condition is specified in the follows during the testing.

3.2.6 TEST RESULTS (BETWEEN 9KHZ – 30 MHZ)

Temperature:	20℃	Relative Humidtity:	48%
Pressure:	1010 hPa	Test Voltage :	DC 3V
Test Mode :	Mode 4	Polarization :	--

Freq.	Reading	Limit	Margin	State
(MHz)	(dBuV/m)	(dBuV/m)	(dB)	P/F
--	--	--	--	PASS
--	--	--	--	PASS

NOTE:

The amplitude of spurious emissions which are attenuated by more than 20dB below the permissible value has no need to be reported.
Distance extrapolation factor =40 log (specific distance/test distance)(dB);
Limit line = specific limits(dBuv) + distance extrapolation factor.

3.2.7 TEST RESULTS (BETWEEN 30MHZ – 1GHZ)

Temperature:	26℃	Relative Humidity:	54%
Pressure:	1010 hPa	Polarization :	Horizontal
Test Voltage :	DC 3V		
Test Mode :	Mode 4		

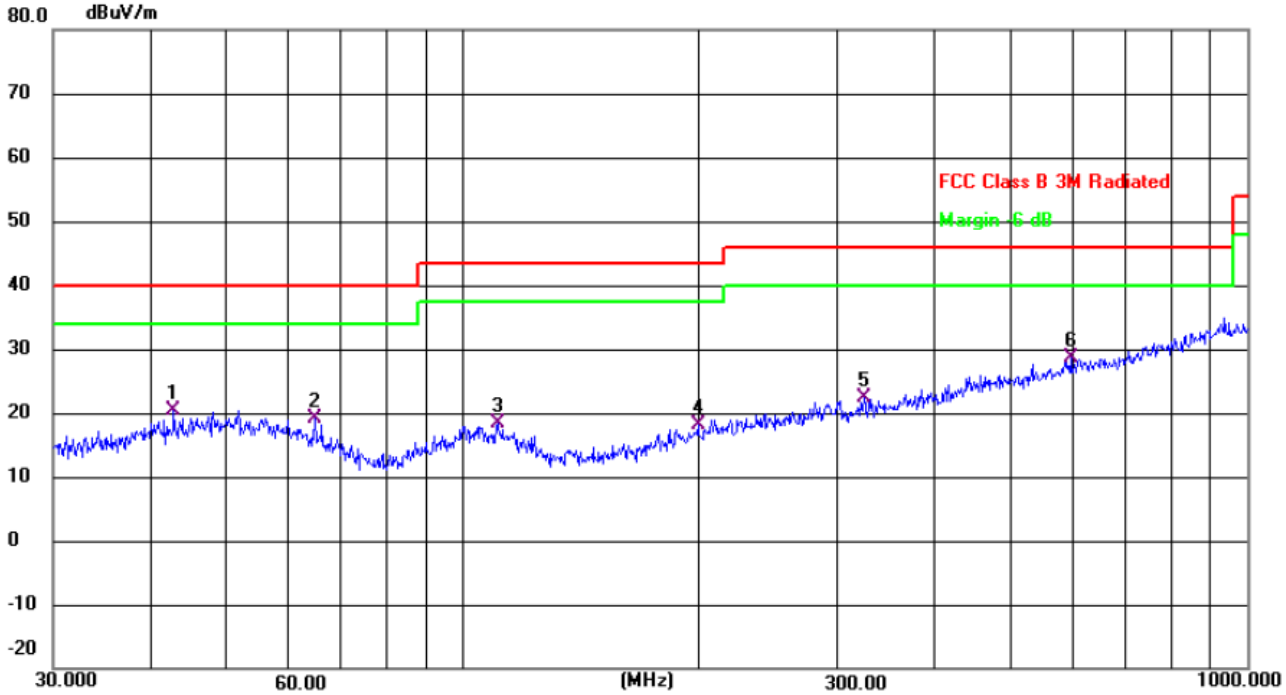

No.	Mk.	Freq.	Reading Level	Correct Factor	Measure-ment	Limit	Margin	
		MHz	dBuV	dB/m	dBuV/m	dBuV/m	dB	Detector
1		42.7496	27.77	-7.49	20.28	40.00	-19.72	QP
2		64.6594	27.96	-8.90	19.06	40.00	-20.94	QP
3		110.5687	27.09	-8.75	18.34	43.50	-25.16	QP
4		199.2855	27.08	-9.04	18.04	43.50	-25.46	QP
5		324.4561	28.10	-5.83	22.27	46.00	-23.73	QP
6	*	595.1329	28.23	0.46	28.69	46.00	-17.31	QP

Remark:

Correct Factor = Cable loss + Antenna factor – Preamplifier;

Level = Reading Level + Correct Factor; Margin = Level - Limit;

Temperature:	26℃	Relative Humidity:	54%
Pressure:	1010 hPa	Polarization :	Vertical
Test Voltage :	DC 3V		
Test Mode :	Mode 4		

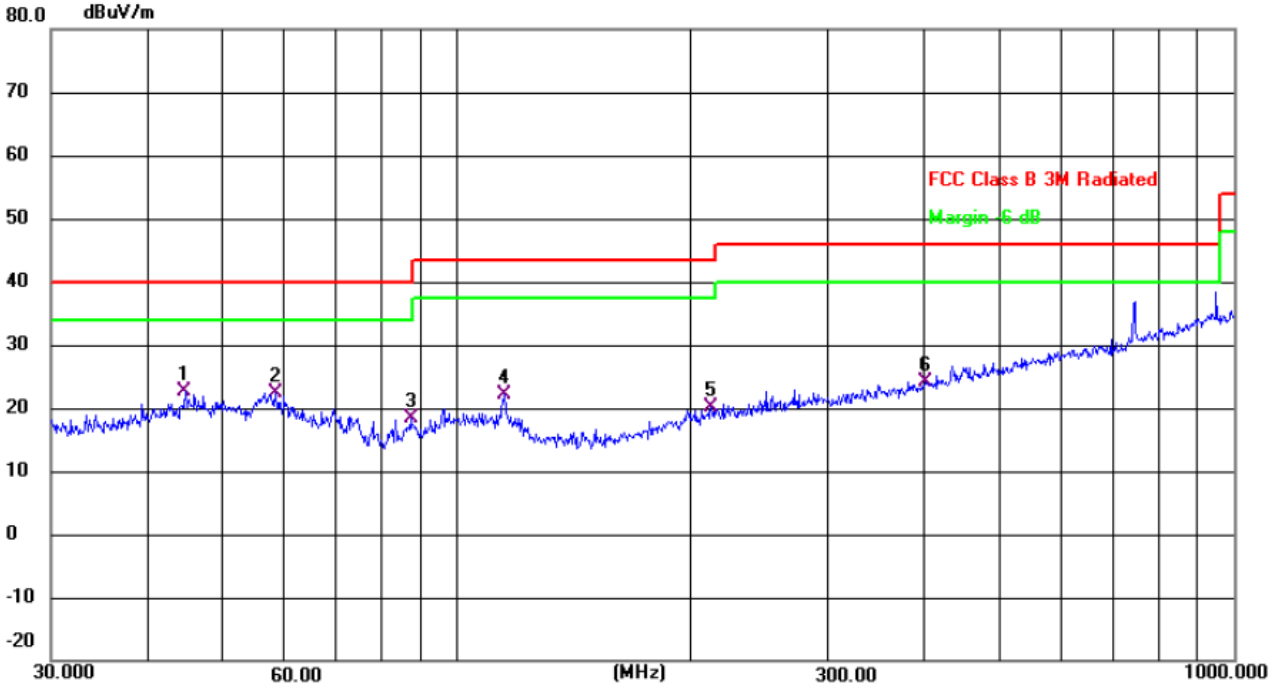

No.	Mk.	Freq.	Reading Level	Correct Factor	Measure-ment	Limit	Margin	
		MHz	dBuV	dB/m	dBuV/m	dBuV/m	dB	Detector
1	*	44.7433	29.68	-7.02	22.66	40.00	-17.34	QP
2		58.4074	29.90	-7.59	22.31	40.00	-17.69	QP
3		87.1117	30.04	-11.67	18.37	40.00	-21.63	QP
4		114.9169	32.14	-9.90	22.24	43.50	-21.26	QP
5		212.2695	28.52	-8.37	20.15	43.50	-23.35	QP
6		400.4319	28.01	-3.94	24.07	46.00	-21.93	QP

Remark:

Correct Factor = Cable loss + Antenna factor – Preamplifier;

Level = Reading Level + Correct Factor; Margin = Level - Limit;

3.2.8 TEST RESULTS (1GHZ~25GHZ)

GFSK

Polar (H/V)	Frequency (MHz)	Meter Reading (dBuV)	Pre-amplifier (dB)	Cable Loss (dB)	Antenna Factor (dB/m)	Emission Level (dBuV/m)	Limits (dBuV/m)	Margin (dB)	Detector Type
operation frequency:2402									
V	2402.00	114.19	52.16	2.78	27.41	92.22	114	-21.78	PK
V	2402.00	106.58	52.16	2.78	27.41	84.61	94	-9.39	AV
V	4804.00	78.62	51.74	3.08	31.25	61.21	74	-12.79	PK
V	4804.00	60.93	51.74	3.08	31.25	43.52	54	-10.48	AV
V	16132.00	54.87	51.56	7.36	41.57	52.24	74	-21.76	PK
H	2402.00	114.78	52.16	2.78	27.41	92.81	114	-21.19	PK
H	2402.00	105.73	52.16	2.78	27.41	83.76	94	-10.24	AV
H	4804.00	77.03	51.74	3.08	31.25	59.62	74	-14.38	PK
H	4804.00	60.29	51.74	3.08	31.25	42.88	54	-11.12	AV
H	16132.00	55.80	51.56	7.36	41.57	53.17	74	-20.83	PK
operation frequency:2440									
V	2440.00	113.45	52.11	2.82	27.47	91.63	114	-22.37	PK
V	2440.00	106.04	52.11	2.82	27.47	84.22	94	-9.78	AV
V	4880.00	78.22	51.77	3.03	31.34	60.82	74	-13.18	PK
V	4880.00	61.44	51.77	3.03	31.34	44.04	54	-9.96	AV
V	16132.00	54.76	51.56	7.36	41.57	52.13	74	-21.87	PK
H	2440.00	113.06	52.11	2.82	27.47	91.24	114	-22.76	PK
H	2440.00	105.40	52.11	2.82	27.47	83.58	94	-10.42	AV
H	4880.00	76.81	51.77	3.03	31.34	59.41	74	-14.59	PK
H	4880.00	59.73	51.77	3.03	31.34	42.33	54	-11.67	AV
H	16132.00	55.76	51.56	7.36	41.57	53.13	74	-20.87	PK
operation frequency:2480									
V	2480.00	114.50	52.23	2.86	27.44	92.57	114	-21.43	PK
V	2480.00	107.76	52.23	2.86	27.44	85.83	94	-8.17	AV
V	4960.00	78.91	51.69	3.05	31.39	61.66	74	-12.34	PK
V	4960.00	61.22	51.69	3.05	31.39	43.97	54	-10.03	AV
V	16132.00	55.14	51.56	7.36	41.57	52.51	74	-21.49	PK
H	2480.00	114.46	52.23	2.86	27.44	92.53	114	-21.47	PK
H	2480.00	106.58	52.23	2.86	27.44	84.65	94	-9.35	AV
H	4960.00	78.32	51.69	3.05	31.39	61.07	74	-12.93	PK
H	4960.00	60.12	51.69	3.05	31.39	42.87	54	-11.13	AV
H	16132.00	55.14	51.56	7.36	41.57	52.51	74	-21.49	PK

Remark:

1. Emission Level = Meter Reading + Antenna Factor + Cable Loss – Pre-amplifier,
   Margin= Emission Level - Limit
2. If peak below the average limit, the average emission was no test.
3. The amplitude of spurious emissions which are attenuated by more than 20dB below the permissible value has no need to be reported.

3.3 RADIATED BAND EMISSION MEASUREMENT

3.3.1 TEST REQUIREMENT:

FCC Part15 C Section 15.209 and 15.205

LIMITS OF RADIATED EMISSION MEASUREMENT (Above 1000MHz)

FREQUENCY (MHz)	Limit (dBuV/m) (at 3M)	
	PEAK	AVERAGE
Above 1000	74	54

Notes:

(1) The limit for radiated test was performed according to FCC PART 15C.

(2) The tighter limit applies at the band edges.

(3) Emission level (dBuV/m)=20log Emission level (uV/m).

Spectrum Parameter	Setting
Attenuation	Auto
Start Frequency	2300MHz
Stop Frequency	2520MHz
RB / VB (emission in restricted band)	1 MHz / 1 MHz for Peak, 1 MHz / 10Hz for Average

3.3.2 TEST PROCEDURE

Above 1GHz test procedure as below:

a. 1. The EUT was placed on the top of a rotating table 1.5 meters above the ground at a 3 meter camber. The table was rotated 360 degrees to determine the position of the highest radiation.

b. The EUT was set 3 meters away from the interference-receiving antenna, which was mounted on the top of a variable-height antenna tower.

c. The antenna height is varied from one meter to four meters above the ground to determine the maximum value of the field strength. Both horizontal and vertical polarizations of the antenna are set to make the measurement.

d. For each suspected emission, the EUT was arranged to its worst case and then the antenna was tuned to heights from 1 meter to 4 meters and the rota table was turned from 0 degrees to 360 degrees to find the maximum reading.

e. The test-receiver system was set to Peak Detect Function and Specified Bandwidth with Maximum Hold Mode.

f. If the emission level of the EUT in peak mode was 10dB lower than the limit specified, then testing could be stopped and the peak values of the EUT would be reported. Otherwise the emissions that did not have 10dB margin would be re-tested one by one using peak, quasi-peak or average method as specified and then reported in a data sheet.

g. Test the EUT in the lowest channel,the Highest channel

Note:

Both horizontal and vertical antenna polarities were tested
and performed pretest to three orthogonal axis. The worst case emissions were reported

3.3.3 DEVIATION FROM TEST STANDARD

No deviation

3.3.4 TEST SETUP

Radiated Emission Test-Up Frequency Above 1GHz

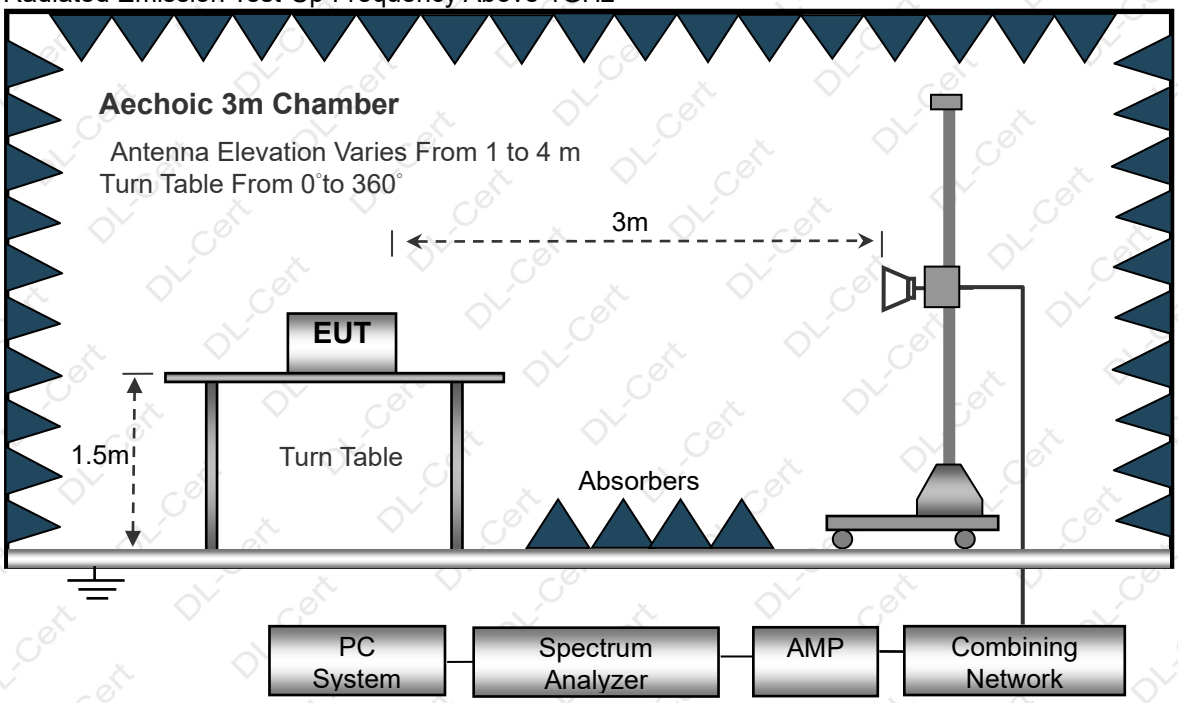

3.3.5 EUT OPERATING CONDITIONS

The EUT tested system was configured as the statements of 2.3 Unless otherwise a special operating condition is specified in the follows during the testing.

3.3.6 TEST RESULT

GFSK

Polar (H/V)	Frequency (MHz)	Meter Reading (dBuV)	Pre-amplifier (dB)	Cable Loss (dB)	Antenna Factor (dB/m)	Emission Level (dBuV/m)	Limits (dBuV/m)	Margin (dB)	Detector Type
operation frequency:2402									
V	2390.00	75.88	52.12	2.73	27.38	53.87	74	-20.13	PK
V	2390.00	65.56	52.12	2.73	27.38	43.55	54	-10.45	AV
V	2400.00	77.07	52.16	2.78	27.41	55.1	74	-18.9	PK
V	2400.00	65.14	52.16	2.78	27.41	43.17	54	-10.83	AV
H	2390.00	76.70	52.12	2.73	27.38	54.69	74	-19.31	PK
H	2390.00	64.96	52.12	2.73	27.38	42.95	54	-11.05	AV
H	2400.00	76.41	52.16	2.78	27.41	54.44	74	-19.56	PK
H	2400.00	65.01	52.16	2.78	27.41	43.04	54	-10.96	AV

Polar (H/V)	Frequency (MHz)	Meter Reading (dBuV)	Pre-amplifier (dB)	Cable Loss (dB)	Antenna Factor (dB/m)	Emission Level (dBuV/m)	Limits (dBuV/m)	Margin (dB)	Detector Type
operation frequency:2480									
V	2483.50	75.22	52.23	2.86	27.44	53.29	74	-20.71	PK
V	2483.50	65.94	52.23	2.86	27.44	44.01	54	-9.99	AV
V	2500.00	74.72	52.26	2.88	27.49	52.83	74	-21.17	PK
V	2500.00	65.26	52.26	2.88	27.49	43.37	54	-10.63	AV
H	2483.50	75.12	52.23	2.86	27.44	53.19	74	-20.81	PK
H	2483.50	63.84	52.23	2.86	27.44	41.91	54	-12.09	AV
H	2500.00	75.13	52.26	2.88	27.49	53.24	74	-20.76	PK
H	2500.00	66.08	52.26	2.88	27.49	44.19	54	-9.81	AV

Remark:

1. Emission Level = Meter Reading + Antenna Factor + Cable Loss – Pre-amplifier,
   Margin= Emission Level - Limit
2. If peak below the average limit, the average emission was no test.
3. The amplitude of spurious emissions which are attenuated by more than 20dB below the permissible value has no need to be reported.

4. BANDWIDTH TEST

4.1 APPLIED PROCEDURES / LIMIT

FCC Part15 (15.215) , Subpart C	
Section	Test Item
15.215	Bandwidth

4.1.1 TEST PROCEDURE

1. Set RBW = 30 kHz.
2. Set the video bandwidth (VBW) ≥RBW.
3. Detector = Peak.
4. Trace mode = max hold.
5. Sweep = auto couple.
6. Allow the trace to stabilize.
7. Measure the maximum width of the emission that is constrained by the frequencies associated with the two outermost amplitude points (upper and lower frequencies) that are attenuated by 20 dB relative to the maximum level measured in the fundamental emission.

4.1.2 DEVIATION FROM STANDARD

No deviation.

4.1.3 TEST SETUP

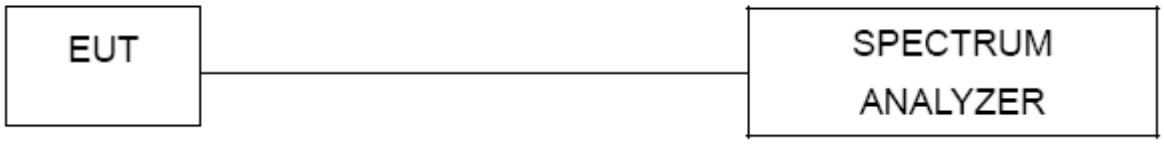

4.1.4 EUT OPERATION CONDITIONS

The EUT tested system was configured as the statements of 2.3 Unless otherwise a special operating condition is specified in the follows during the testing.

4.1.5 TEST RESULTS

Temperature:	25℃	Relative Humidity:	60%
Pressure:	1012 hPa	Test Voltage :	DC 3V
Test Mode :	TX Mode /CH00, CH19, CH39		

	Frequency (MHz)	20dB Bandwidth (MHz)	Result
GFSK	2402	1.176	Pass
	2440	1.177	Pass
	2480	1.175	Pass

GFSK

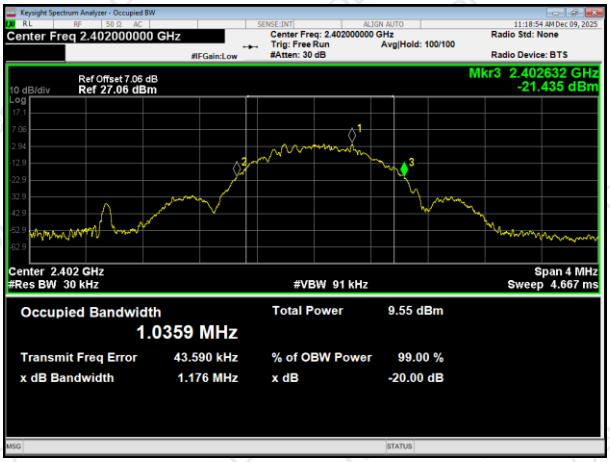

2402MHz

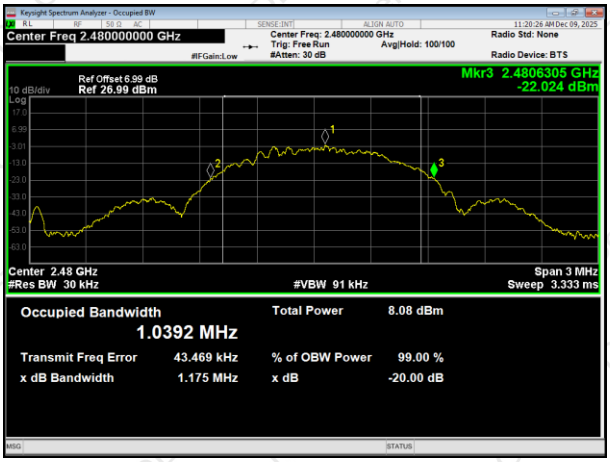

2480MHz

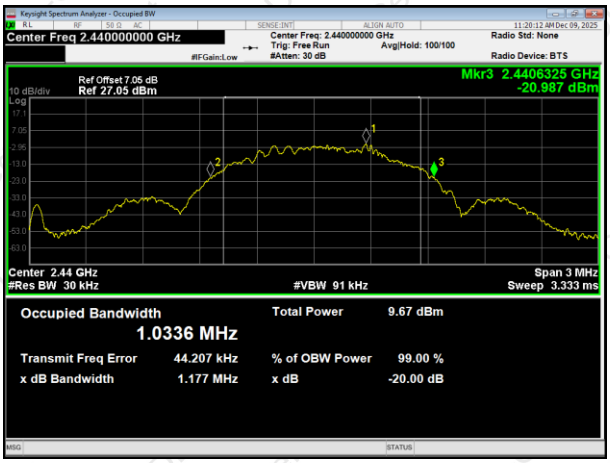

2440MHz

5. ANTENNA REQUIREMENT

5.1 STANDARD REQUIREMENT

15.203 requirement: For intentional device, according to 15.203: an intentional radiator shall be designed to ensure that no antenna other than that furnished by the responsible party shall be used with the device.

5.2 EUT ANTENNA

The EUT antenna is Internal Antenna, It comply with the standard requirement.

6. TEST SEUUP PHOTO

Reference to the appendix I for details.

7. EUT PHOTO

Reference to the appendix II for details.

※※※※※ **END OF REPORT** ※※※※※