# Multi Functional Portable Display

## User Manual

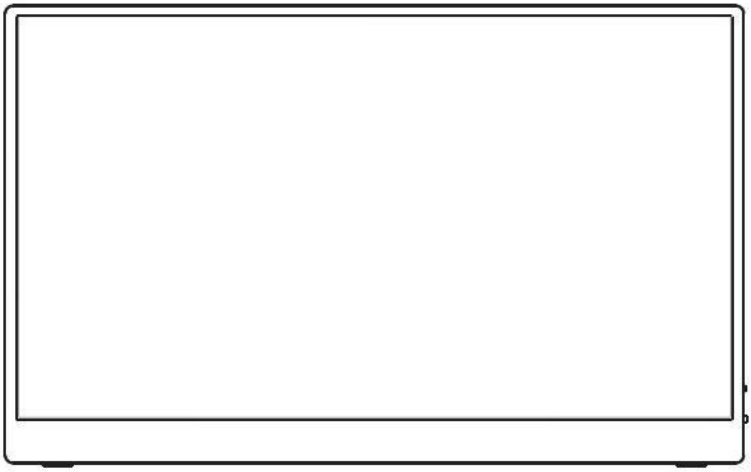

This is a plug-and-play monitor and does not require any driver setup

# Product Appearance

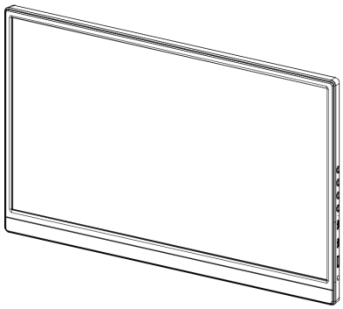

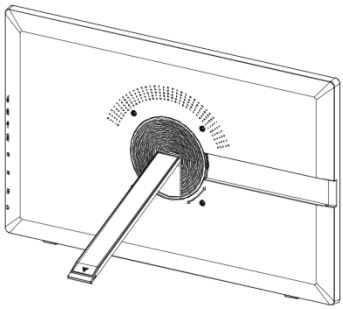

# Product Information

| | | | |
|---|---|---|---|
| Product Name | Multi Functional Portable Display | Product Size | 361.95*227.18*14mm |
| Screen size | 15.6 inch. | Resolution | 1920*1080 |
| Product weight | 0.84Kg | Refresh frequency | 60Hz |
| Is it touching | NO | Brightness | 180~250cd/m² |
| Viewing angle | 178° | Contrast | 800:1 |
| Fuselage Material | ABS | Speakers | 8Ω/2W*2 |
| Output port | 3.5mm headphone port | Input port | miniHDMI,Type-C×2 |
| Packing List | miniHDMI to HDMI cable *1, USB to Type-C cable *1, USB power adapter *1, protective case *1, manual *1 | | |

*Note: The above data are related to the measurement tools, environment, personnel and other objective factors, there may be errors, such as error is normal, please take the actual measurement shall prevail. If there are updates and changes to the hardware parameters and the above parameter information has not been updated in a timely manner, please refer to the actual product received.

# Interface & Button Introduction

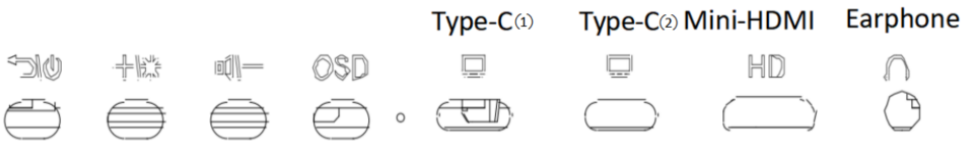


## ■Button and Interface Descriptions

: **Return/Power Button,** Long press: Power on/off; Short press: Toggle projection source; Serves as return key when OSD menu is displayed

: **Brightness/Increase Button,** Press once: Displays brightness adjustment menu, Press again: Increases brightness; Adjusts volume up when volume menu is active

: **Volume/Decrease Button,** Press once: Displays volume adjustment menu, Press again: Decreases volume; Adjusts brightness down when brightness menu is active

OSD : **Short press**: Displays settings menu (brightness, volume, aspect ratio, auto-rotate, language)

**Long press**: Toggles wireless projection mode (CM-A/CM-B)

**Type-C①**: Power supply port (supports fast charging)

**Type-C②**: Data transfer port

**Mini-HDMI**: Wired projection interface

**Earphone**: 3.5mm headphone jack

**CM-A/CM-B Mode**:

Default mode: CM-A

For regions where wireless projection is unavailable, long-press OSD to switch to CM-B mode.

## ■Projection Source Switching

Upon startup, the device defaults to the wireless projection display.

Short-press the Power button to switch to HDMI wired projection.

## ■Type-C 3.1 interface (support PD protocol)

Data transmission, audio and video output, fast charging in one device

# Basic operation of device connection

① Laptop or desktop computer port connected to HDMI

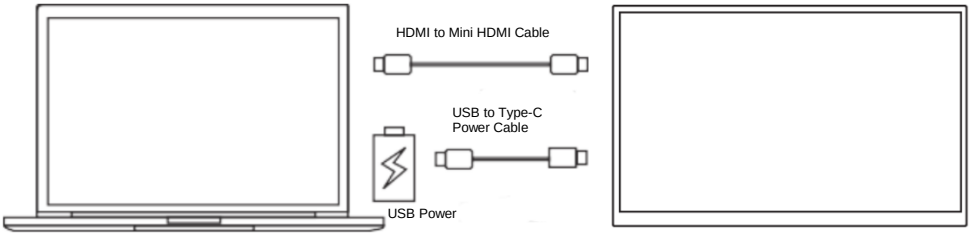


② Cell phones, tablets, and computers connect wirelessly by following the guide screen on the top page of the device

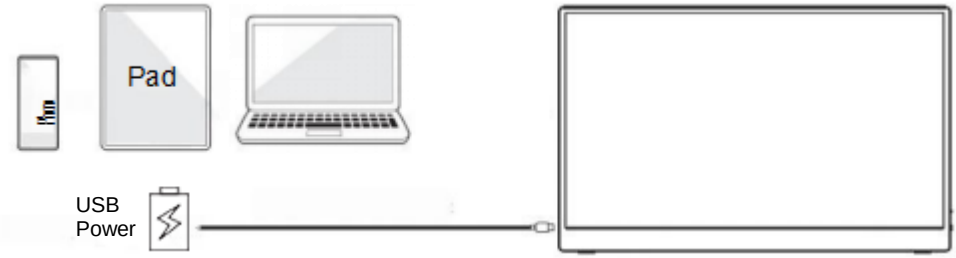


③Connecting to a gaming device port HDMI

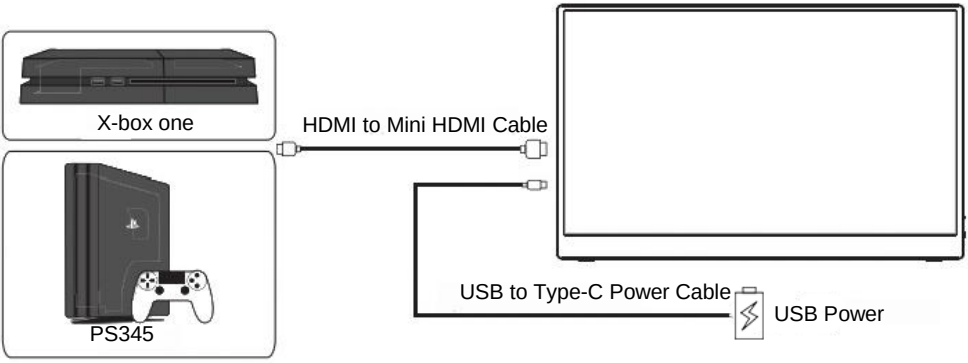

## ④Other devices port connected to HDMI

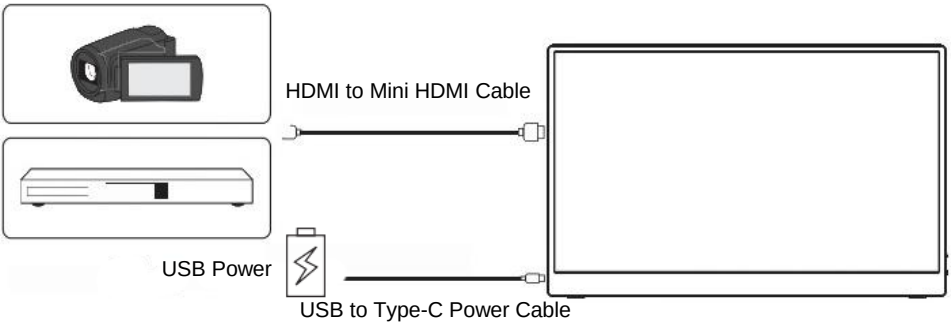


## ⑤Connecting to Nintendo consoles

### 01) with Connect to cable Switch base HDMI

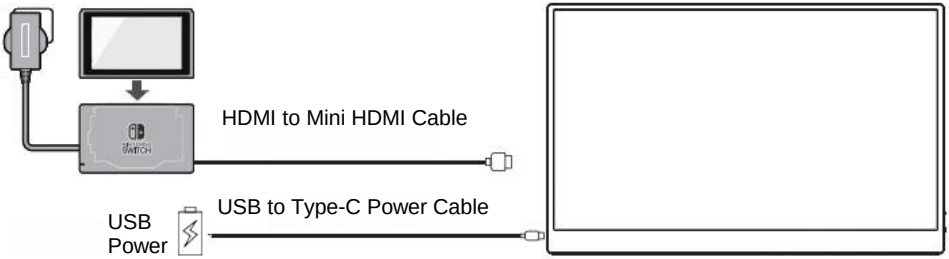


### 02) Type-C cable connects to Switch

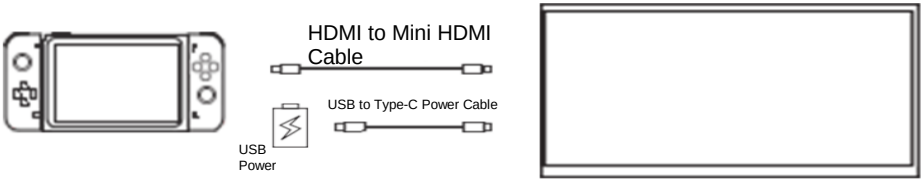


## common problems

### Repeated black or flashing screen on the monitor

A: The minimum power requirement of the monitor is 5V2A; the above problem may be caused by insufficient power supply, please connect a stable external DC power supply to the monitor.

## About after-sales and shipping

- Any quality problems caused by external forces will not be returned or exchanged. Such as: drop, hit, touch, disassemble the machine to change or accident.
- We do not cover the shipping cost for returns or exchanges that are not of quality; if there is a quality problem, we cover the standard shipping .cost

## About Warranty

The warranty only covers the main body of the product. Software, accessories, consumables, etc. stored in the product or connected products are not covered by the warranty.

Warranty is not covered if.

1) Due to fire, earthquake, lightning, gas damage and other natural disasters, pollution or abnormal voltage and other external Malfunctions and damages caused by the environment.
1) Improper such as falling after purchase and transportation, or impact during movement. Failure or damage caused by operation
2) Operation failure and damage caused by improper use.
3) Modify, adjust, and replace parts for this product.
4) The of the light source LED backlight is a consumable item and is not covered by the warranty.

**FCC Warning**

This device complies with Part 15 of the FCC Rules. Operation is subject to the following two conditions:
(1) This device may not cause harmful interference, and (2) this device must accept any interference received, including interference that may cause undesired operation.

NOTE 1: This equipment has been tested and found to comply with the limits for a Class B digital device, pursuant to part 15 of the FCC Rules. These limits are designed to provide reasonable protection against harmful interference in a residential installation. This equipment generates, uses and can radiate radio frequency energy and, if not installed and used in accordance with the instructions, may cause harmful interference to radio communications. However, there is no guarantee that interference will not occur in a particular installation. If this equipment does cause harmful interference to radio or television reception, which can be determined by turning the equipment off and on, the user is encouraged to try to correct the interference by one or more of the following measures:
- Reorient or relocate the receiving antenna.
- Increase the separation between the equipment and receiver.
-Connect the equipment into an outlet on a circuit different from that to which the receiver is connected.
-Consult the dealer or an experienced radio/TV technician for help.

NOTE 2: Any changes or modifications to this unit not expressly approved by the party responsible for compliance could void the user's authority to operate the equipment.

The device has been evaluated to meet general RF exposure requirement. The device can be used in portable exposure condition without restriction.