AS3112 BLE Bluetooth Module Operation Manual

Version: V1.4

Date: 2025-12-12

Low Power Bluetooth BLE and Audio Solution

Turnkey and Custom Development Software Services

AT Instruction Protocol

MIDI Protocol

1. Introduction

The AS3112 is a Bluetooth Low Energy wireless module solution. This module supports Bluetooth 5.4 and the peripheral functions (ADC, timers, PWM). Also have support serial communication protocols (I2C, UART, SPI) through its programmable architecture.

The Module Size is 19.5 mm x 14.0 mm x 0.8 mm (LxWxH) that integrated PCB antenna. Internal have integrated 4 M bits Flash memory and 13 GPIOs have support for applications.

2. Key Features

Bluetooth

- Bluetooth Low Energy V5.3 qualified, support 1 Mbps, 2 Mbps, Long Range 125 kbps and 500 kbps.
- Industry leading power consumption (ATB1113 Chip) :
  - BLE Active Rx: 3.96 mA (with DCDC)
  - BLE Active Tx: 3.98 mA@0dBm (with DCDC)
  - Standby mode with all wakeup sources (with 24KB SRAM retention) : <2uA
  - Standby mode with key sources (without SRAM retention) : <100nA
- RX sensitivity: -96 dBm (30.8% PER, Ideal)
- TX power range: FCC:Up to +3dBm ; TELEC:1.8dBm
- ATB1113 Chip Qualified Design ID: 190126

System

- ARM Cortex-M4 processor, up to 64MHz， Zephyr RTOS
- 70KB RAM+8KB Icache+4Mbits Flash
- Security: CHIP unique ID, firmware encryption, firmware tamper proofing
- Support UART, SWD, OTA (Over the Air) upgrade firmware
- Wide supply voltage range (1.8V to 3.6V)
- Support external 24MHz crystal oscillator
- Support internal 64MHz RC oscillator
- Support internal 32KHz RC oscillator for low BOM cost mode without external crystal

Audio

- Ultra low power consumption with intelligent Voice ADC
- Mono Sigma-Delta Voice ADC, 16bit, 16KHz sample rate ,SNR(A-weighted): 85dB
- Configurable high-pass filter with ADC
- Support mono DMIC IN, DMIC Clock up to 3MHz
- Support PDM TX driver
- I2S Tx/Rx: standard I2S, Support slave mode, sample rate up to 44.1KHz/48KHz

Peripheral

- Embed 8-CH 12-bit LRADC (include BAT ADC and Temp ADC, up to 1MHz sample in fast mode)
- Real-time counters (RTC)
- Flexible General Purpose IOs (21 GPIOs)

- Timer x 4 (32bit)
- Capture x 2
- TWI x 3, UART x 4, SPI x 1, PWM x 14
- IRC One Pin TX/RX: Built-in input amplifier and open-drain output circuit (380mA @ IOVCC
  - = 3V, VOL = 1.5V)
- Key scanner
- Support prevent dead key
- Temperature Sensor
- Battery Monitor

3. Applications

- Smart Home devices: BLE Mesh networking devices, Beacon applications
- Smart Wearable devices: Sports bracelet
- Industrial sensor equipment: Data collector
- AI Voice Remote
- HID devices: Mouse, Keyboard, Selfie device, Game controller, Sweep code gun, Wireless Toys
- Medical Monitors and Healthcare equipment: Sphygmomanometer, Thermometer
- Electronphones, Medical Instruments

4. Main Chip Block Diagram

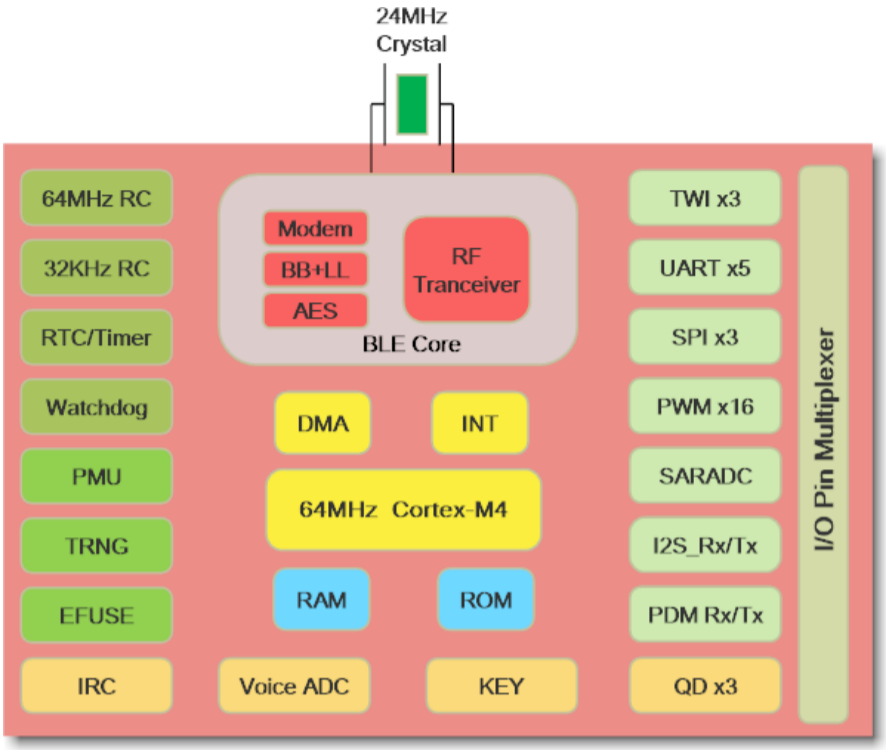

5. Package and Size

LxWxH=19.5 mm x 15.2.0 mm x 0.8 mm

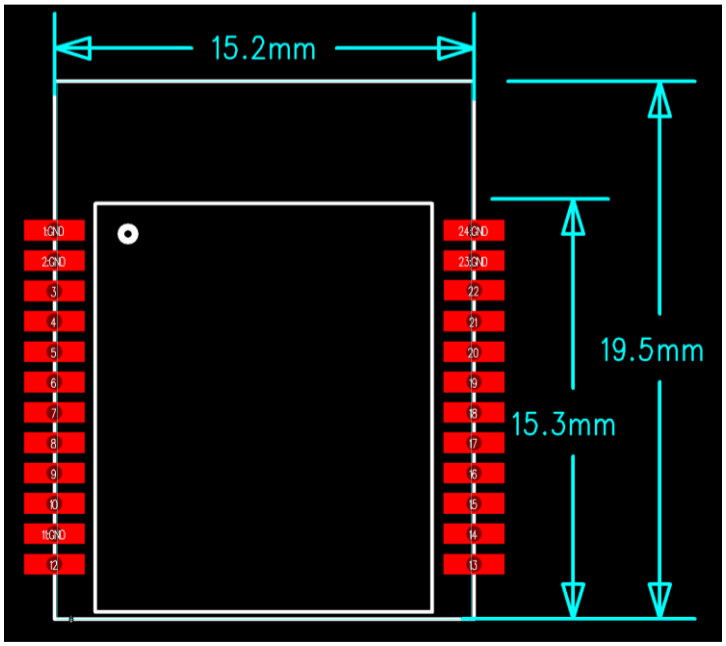

6. Pin Description

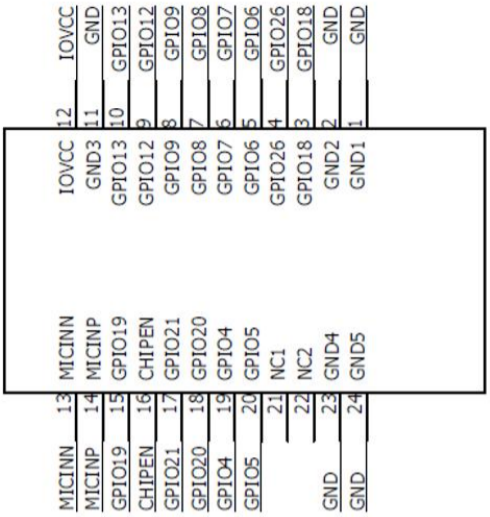

PIN NO	NAME	FUNCTION	GPIO Initial State
1	GND		
2	GND		
3	GPIO18	GPIO18 / PWM0_0P / PWM2 / UART1_CTS / UART4_RTS / UART4_ISO7816_RST / SPI3_MOSI / TWI0_SCL / QDx_A / BLE_SYNC / I2SG1_LRCLK / KEY10 / CAPTURE0	Z
4	GPIO26	GPIO26 / PWM0_0N / PWM1_0 / PWM4 / UART1_RTS / UART1_ISO7816_RST / SPI3_MISO / TWI0_SDA / QDx_B / BLE_IN_PROCESS / I2SG1_BCLK / KEY15 / CAPTURE0	Z
5	GPIO6	GPIO6 / PWM0_3P / PWM2 / UART0_CTS / UART3_RTS / UART3_ISO7816_RST / SPI3_CLK / TWI1_SCL / QDx_A / BLE_PTI[0] / I2SG1_BCLK / DMIC_CLK / KEY11 / CAPTURE0	Z
6	GPIO7	GPIO7 / PWM0_3N / PWM1_3 / UART0_RTS / UART3_CTS / UART0_ISO7816_RST / TWI1_SDA / QDx_B / BLE_PTI[1] / I2SG1_MCLK / DMIC_DAT / KEY7 / CAPTURE1	Z
7	GPIO8	GPIO8 / PWM0_5P / PWM4 / UART3_TX / UART3_ISO7816_CLK / SPI3_SS / TWI2_SCL / QDy_A / BLE_PTI[2] / I2SG1_LRCLK / PDM_DOUT / KEY8 / CAPTURE1	Z
8	GPIO9	GPIO9 / PWM0_5N / PWM1_5 / PWM5_IRTX / UART3_RX / UART3_ISO7816_DAT / TWI2_SDA / QDy_B / KEY9 / CAPTURE0	Z
9	GPIO12	GPIO12 / PWM0_4P / PWM3 / UART0_TX / UART0_ISO7816_CLK / TWI0_SCL / QDz_A / BLE_PTI[3] / I2S_DOUT / KEY5 / CAPTURE0 / HOST_SWCLK(G1)	Z
10	GPIO13	GPIO13 / PWM0_4N / PWM1_4 / UART0_RX / UART0_ISO7816_DAT / TWI0_SDA / QDz_B / I2S_DIN / DMIC_DAT / KEY6 / CAPTURE1 / HOST_SWDIO(G1)	Z*
11	GND		
12	IOVCC		
13	MICNN	GPIO41 / PWM1_3 / PWM2 / UART4_RTS / UART4_ISO7816_RST / TWI2_SCL / I2S_DIN / PDM_DOUT / KEY10 / CAPTURE0 / MICINN / VMIC	Z

14	MICNP	GPIO40 / PWM1_2 / PWM5_IRTX / UART4_RX / UART4_ISO7816_DAT / I2SG0_LRCLK / DMIC_DAT / KEY9 / CAPTURE1 / MICINP	Z
15	GPIO19	GPIO19/PWM1_5/PWM3/UART4_TX/UART4_ISO7816_CLK/I2SG0_M CLK/DMIC_DAT/KEY11/CAPTURE1/VMIC	Z
16	CHIPEN		
17	GPIO21	GPIO21 / PWM0_5N / PWM1_5 / PWM5_IRTX / UART3_RX / UART3_ISO7816_DAT / SPI2_CLK / TWI2_SDA / QDy_B / WLAN_RX / I2SG0_LRCLK / PDM_DOUT / KEY2 / CAPTURE1 / LRADC1	Z
18	GPIO20	GPIO20 / PWM0_5P / PWM4 / UART3_TX / UART3_ISO7816_CLK / SPI2_SS / TWI2_SCL / QDy_A / WLAN_TX / I2SG1_LRCLK / DMIC_DAT / KEY3 / CAPTURE0 / LRADC0	Z
19	GPIO4	GPIO4 / PWM0_2P / PWM1_5 / UART1_TX / UART1_ISO7816_CLK / SPI3_MISO / TWI2_SCL / QDz_A / WLAN_RX / I2S_DIN / KEY4 / CAPTURE0 / LRADC4 / HOST_SWCLK(G0)	L
20	GPIO5	GPIO5 / PWM0_2N / PWM1_2 / UART1_RX / UART1_ISO7816_DAT / SPI3_MOSI / TWI2_SDA / QDz_B / WLAN_TX / I2SG1_MCLK / PDM_DOUT / KEY12 / CAPTURE1 / LRADC5 / HOST_SWDIO(G0)	H
21	NC		
22	NC		
23	GND		
24	GND		

Note:

Z: High resistance.

Z*: normal mode is High resistance, boot fail is Infinitive. H: High. The inside of the chip is about 10K pull-up resistor.

L: Low. The inside of the chip is about 10K pull-down resistor

7. Electrical Characteristics

These absolute maximum ratings are stress ratings, operating at or beyond these ratings for extended periods of time (above 1ms) may result in permanent damage to the AS3112 Module main chip. Unless specified all voltages are relative to VSS.

Item	Min	Typ	Max	Unit	Condition
IOVCC		3.0	3.6	V	-
Input Voltage (IO)		-	3.6	V	-
ESD HBM	2000	-	-	V	-
ESD CDM	500	-	-	V	-
Ambient Temperature	-40(TBD)	25	85	℃	-
Storage Temperature	-55	25	150	℃	-
Input Level (Radio RF)		FCC:3 TELEC:1.8		dBm	-

Note:

[1] Even if one of the above parameters exceeds the absolute maximum ratings momentarily, the quality of the product may be degraded. The absolute maximum ratings, therefore, specify the valueexceeding, which the product may be physically damaged. Use the product well within these ratings.

[2] All voltage values are with respect to GND.

FCC Statement

This device complies with part 15 of the FCC rules. Operation is subject to the following two conditions: (1) this device may not cause harmful interference, and (2) this device must accept any interference received, including interference that may cause undesired operation.

Changes or modifications not expressly approved by the party responsible for compliance could void the user ' s authority to operate the equipment.

NOTE: This equipment has been tested and found to comply with the limits for a Class B digital device, pursua nt to part 15 of the FCC Rules. These limits are designed to provide reasonable protection against harmful inte rference in a residential installation. This equipment generates uses and can radiate radio frequency energy a nd, if not installed and used in accordance with the instructions, may cause harmful interference to radio com munications. However, there is no guarantee that interference will not occur in a particular installation. If this equipment does cause harmful interference to radio or television reception, which can be determined by turn ing the equipment off and on, the user is encouraged to try to correct the interference by one or more of the following measures:

- Reorient or relocate the receivingantenna.
- Increase the separation between the equipment and receiver.
- Connect the equipment into an outlet on a circuit different from that to which the receiver is connected.
- Consult the dealer or an experienced radio/TV technician for help important announcement

Important Note:

Radiation Exposure Statement

This equipment complies with FCC radiation exposure limits set forth for an uncontrolled environment. This equipment should be installed and operated with minimum distance 20cm between the radiator and your body.

This transmitter must not be co-located or operating in conjunction with any other antenna or transmitter.

Country Code selection feature to be disabled for products marketed to the US/Canada.

This device is intended only for OEM integrators under the following conditions:

1. The antenna must be installed such that 20 cm is maintained between the antenna and users, and
2. The transmitter module may not be co-located with any other transmitter or antenna,

As long as the three conditions above are met, further transmitter testing will not be required. However, the OEM integrator is still responsible for testing their end-product for any additional compliance requirements required with this module installed.

Important Note:
In the event that these conditions cannot be met (for example certain laptop configurations or co-location with another transmitter), then the FCC authorization is no longer considered valid and the FCC ID cannot be used on the final product. In these circumstances, the OEM integrator will be responsible for re-evaluating the end product (including the transmitter) and obtaining a separate FCC authorization.

End Product Labeling
The final end product must be labeled in a visible area with the following"
Contains FCC ID: **2BU6F-AS3112** "

Manual Information to the End User
The OEM integrator has to be aware not to provide information to the end user regarding how to install or remove this RF module in the user ' s manual of the end product which integrates this module.
The end user manual shall include all required regulatory information/warning as show in this manual.**Integration instructions for host product manufacturers according to KDB 996369 D03 OEM Manual v01r01**

2.2 List of applicable FCC rules
CFR 47 FCC PART 15 SUBPART C has been investigated. It is applicable to the modular transmitter

2.3 Specific operational use conditions
This module is stand-alone modular. If the end product will involve the Multiple simultaneously transmitting condition or different operational conditions for a stand-alone modular transmitter in a host, host manufacturer have to consult with module manufacturer for the installation method in end system.

2.4 Limited module procedures
Not applicable

2.5 Trace antenna designs
Not applicable

2.6 RF exposure considerations
This equipment complies with FCC radiation exposure limits set forth for an uncontrolled environment. This equipment should be installed and operated with minimum distance 20cm between the radiator & your body.

2.7 Antennas
This radio transmitter
FCC ID: 2BU6F-AS3112 has been approved by Federal Communications Commission to operate with the antenna types listed below, with the maximum permissible gain indicated. Antenna types not included in this list that have a gain greater than the maximum gain indicated for any type listed are strictly prohibited for use with this device.

Antenna No.	Model No. of antenna:	Type of antenna:	Gain of the antenna (Max.)		Frequency range:
			Antenna 1	Antenna 2	
Bluetooth	/	PCB Antenna	-0.91	N/A	2402-2480MHz

2.8 Label and compliance information
The final end product must be labeled in a visible area with the following" Contains **FCC ID: 2BU6F-AS3112**".

2.9 Information on test modes and additional testing requirements
Host manufacturer is strongly recommended to confirm compliance with FCC requirements for the transmitter when the module is installed in the host.

2.10 Additional testing, Part 15 Subpart B disclaimer
Host manufacturer is responsible for compliance of the host system with module installed with all other applicable requirements for the system such as Part 15 B.

2.11 Note EMI Considerations
Host manufacture is recommended to use D04 Module Integration Guide recommending as "best practice" RF design engineering testing and evaluation in case non-linear interactions generate additional non-compliant limits due to module placement to host components or properties.

2.12 How to make changes
This module is stand-alone modular. If the end product will involve the Multiple simultaneously transmitting condition or different operational conditions for a stand-alone modular transmitter in a host, host manufacturer have to consult with module manufacturer for the installation method in end system. According to the KDB 996369 D02 Q&A Q12, that a host manufacture only needs to do an evaluation (i.e., no C2PC required when no emission exceeds the limit of any individual device (including unintentional radiators) as a composite. The host manufacturer must fix any failure.